Manualslib.com - The Global Manuals Library

STUDER A810 OPERATING AND SERVICE INSTRUCTIONS

Table of Contents

TECHNICAL DOCUMENTATION
START-UP PROCEDURES
Table of Contents
GENERAL REFERENCES
Ve GENERAL REFERENCES
QUICK-REFERENCE DISCRIPTION
STANDARD VERSIONS
ACCESSORIES
TECHNICAL SPECIFICATIONS

Frequency Response
Dimensions
Packing
STANDARD CALIBRATION VALUES
MAINTENANCE HINTS FOR THE SERVICE PERSONNEL
Abbreviations
UNPACKING AND TESTING
PLACE OF INSTALLATION
INSTALLING THE TAPE RECORDER
Portable versions
Installation
CONNECTOR PANEL
AC Power, voltage selector
Line input
Line output
Connectors for VU-meter panel
Remote control connectors
REMOTE CONTROL CIRCUIT
Headphones socket
Controls
Power switch
Tape timer display
Pilot Lamps
STEREO or MONO
Mounting the tape
Tape speeds
Play mode
Recording
Sync reproduction

Spooling mode
Stop mode
Autolocator
Dump editing
Monitor
Tape timer
VU-meter panel
Remote controls
Mono-Stereo switch (option)
Mono/stereo switch with test generator (option)
Time code channel (option)
Varispeed control (option)
EDITING, SPLICING
Procedure for searching a tape address
Cutting the tape
Splicing the tape
DEGRADED OPERATION
Error messages appearing on the tape timer display
OPERATION WITH SERIAL REMOTE CONTROLLER
Data protection
RS 232 interface
CONTINUED ON NEXT PAGE
SPECIAL ORDERS
DAILY CARE
FUNCTIONAL DESCRIPTION
Power supply
MP Unit GR 20 EL 01
TAPE DECK CONTROLLER GR20 ELO2
BUS CONVERTER GR 20 EL 05

PERIPHERY CONTROLLER GR 20 EL 04
COMMAND UNIT GR 21
SERIAL REMOTE CONTROLLER GR 20 EL 03
Capstan motor control GR 26
Spooling motor control GR 24
Tape tension sensors GR 27, GR
Tape move sensor GR 28 EL
REMOVING THE TAPE TRANSPORT ASSEMBLIES
Covers
Headblock
Tape tension sensors
Tape Lift assembly
Lifter assembly
Pressure roller assembly
Tape brakes
Spooling motors
Spooling motor control
Capstan motor
Power supply unit
Monitor unit
MECHANICAL ADJUSTMENTS
Tape brakes
Pressure unit
Tape Lift
Tape tension sensors
Adjusting the dash pot
ELECTRICAL ADJUSTMENTS
CIRCUIT DESCRIPTIONS
DISPLAY | ADDRESS

CIRCUIT DESCRIPTIONS
Line amplifier GR 20 EL 11, EL 16, input and output terminals
Mono/stereo switch GR 20 EL 12 (Option)
TEST GENERATOR
HF driver GR 20 EL 08, EL 13
Record amplifier GR 20 EL 09, EL 14
Time code channel
CALIBRATION
General
Level
Magnetic reference flux
Calibration tapes
Preparatory steps
Reproduce adjustments
Reproduce Level adjustment
Azimuth alignment of the reproduce head
Frequency response adjustment
Adjustments for other tape speeds
Record Adjustments
Preparatory steps
Record level preadjustment
Aligning the azimuth of the record head
Bias adjustment
Azimuth alignment STEREO
Record level adjustment
Frequency response adjustment
Sync adjustments
Preparatory steps 4125
Sync reproduce level adjustment 4125

Frequency response adjustment 4125
RECORD LEVEL
XLR-CONNECTOR
DATA TRANSFER
LINE OUTPUT
POWER SUPPLY
TOP VIEW
AUDIO BLOCK DIAGRAM
WIRE HARNESSES
Specification
Pressure Roller
ANHANG / APPENDIX / ANNEXE
LOCATE + RECORD
Other ManualsLib Projects

STUDER

A810

OPERATING AND SERVICE INSTRUCTIONS

Prepared and edited by
STUDER INTERNATIONAL
(a division of STUDER REVOX AG)
TECHNICAL DOCUMENTATION
Althardstrasse 10
CH-8105 Regensdorf-Zürich

We reserve the right to make alterations.

Copyright by STUDER REVOX AG
printed in Switzerland
Order No.: 10.23.5214 (Ed. 0191)

STUDER is a registered trade mark of STUDER REVOX AG Regensdorf
STUDER ist ein eingetragenes Warenzeichen der STUDER REVOX AG Regensdorf

SECTION 1 GENERAL REFERENCES A810 3

Quick-reference description, machine types, options, accessories and service aids, technical data, maintenance hints for the service personnel

SECTION 2 STARTUP PROCEDURES

Installation, putting into operation, quick-reference operating instructions

SECTION 3 POWER SUPPLY, TAPE TRANSPORT CONTROL

Functional description, removal of tape transport assemblies, mechanical adjustments, circuit descriptions

SECTION 4 AUDIO

Circuit description, calibration, adjustments to audio assemblies, programming the operating parameters

SECTION 5 GENERAL DIAGRAMS

Explanations to wiring lists and signal names, wiring lists (STUDER WIRING), general diagrams (power supply and control logic)

SECTION 6 TAPE TRANSPORT DIAGRAMS

SECTION 7 AUDIO DIAGRAMS

SECTION 8 SPARE PARTS LISTS

SECTION 9 APPENDIX

Modifications, supplementary informations, space for inserting OPTIONS

SICHERHEIT UND ERSTE HILFE

SICHERHEIT

Durch Entfernen von Gehäuseteilen, Abschirmungen etc. werden stromführende Teile freigelegt. Aus diesem Grunde müssen die folgenden Sicherheitsvorschriften unbedingt beachtet werden:

1. **Eingriffe in ein Gerät**
dürfen nur von Fachpersonal vorgenommen werden.

2. **Vor Entfernen von Gehäuseteilen:**
Gerät ausschalten und vom Netz trennen.

3. **Bei geöffnetem Gerät:**
- Netzteil- oder Motorkondensatoren mit einem passenden Widerstand entladen.
- Bauteile grosser Leistung, wie Leistungstransistoren und -widerstände sowie Magnetspulen und Wickelmotoren erst nach dem Abkühlen berühren.

4. **Servicearbeiten bei geöffnetem, unter Spannung stehendem Gerät:**
- Keine blanken Schaltungsteile berühren
- Isolierte Werkzeuge verwenden
- Metallene Halbleitergehäuse nicht berühren, da sie hohe Spannungen aufweisen können.

ERSTE HILFE (bei Stromunfällen)

1. **Bei einem Stromunfall die betroffene Person raschmöglichst vom Strom trennen:**
- Durch Ausschalten des Gerätes
- Ausziehen oder Unterbrechen der Netzzuleitung
- Betroffene Personen mit isoliertem Material (Holz, Kunstoff) von der Gefahrenquelle wegstossen
- Nach einem Stromunfall sollte immer ein Arzt aufgesucht werden.

ACHTUNG
EINE UNTER SPANNUNG STEHENDE PERSON DARF NICHT BERÜHRT WERDEN, SIE KÖNNEN DABEI SELBST ELEKTRISIERT WERDEN!

2. **Bei Bewusstlosigkeit des Verunfallten:**
- Puls kontrollieren,
- bei ausgesetzter Atmung künstlich beatmen,
- Seitenlagerung des Verunfallten und Arzt verständigen.

SAFETY AND FIRST AID

SAFETY

There are no user serviceable components inside the equipment, live parts are laid open when removing protective covers and shieldings. It is essential therefore to ensure that the subsequent safety rules are strictly observed when performing service work or repairs.

1. **Servicing of electronic equipment**
must be performed by qualified personnel only.

2. **Before removing covers:**
Switch off the equipment and unplug the mains cable.

3. **When the equipment is open:**
- Discharge power supply- and motor capacitors through a suitable resistor.
- Components, that carry heavy electrical loads, such as power transistors and resistors as well as solenoid coils and motors should not be touched before a cooling off interval, as a precaution to avoid burns.

4. **Servicing unprotected and operating equipment:**
- Never touch bare wires or circuitry
- Use insulated tools only
- Never touch metal semiconductor cases because they may carry high voltages.

FIRST AID (in case of electric shock)

1. **Separate the person as quickly as possible from the electric power source:**
- by switching off the equipment,
- unplugging or disconnecting the mains cable,
- pushing the person away from the power source by using dry insulating material (such as wood or plastic).
- After having sustained an electric shock, always consult a doctor.

WARNING:
DO NOT TOUCH THE PERSON OR HIS CLOTHING BEFORE POWER IS TURNED OFF, OTHERWISE YOU STAND THE RISK OF SUSTAINING AN ELECTRIC SHOCK AS WELL!

2. **If the person is unconscious**
- Check the pulse,
- reanimate the person if respiration is poor,
- lay the body down and turn it to one side, call for a doctor immediately.

SÉCURITÉ ET PREMIERS SECOURS

SÉCURITÉ

Si les couvercles de protection sont enlevés, les parties de l'appareil qui sont sous tension ne sont plus protégées. Il est donc d'une nécessitée absolue de suivre les instructions suivantes:

1. **Les interventions dans les appareils électriques**
doivent être faites uniquement que par du personnel qualifié

2. **Avant d'enlever les couvercles de protection:**
Couper l'interrupteur principal et débrancher le câble secteur.

3. **Après avoir enlevé les couvercles de protection:**
- Les condensateurs de l'alimentation et des moteurs doivent être déchargés à l'aide d'une résistance appropriée.
- Il est prudent de laisser refroidir les composants de haute puissance, par ex.: transistors de puissance, résistances de puissances de même que des électroaimants et les moteurs de bobinage.

4. **S'il faut que l'appareil soit sous tension pendent les réglages internes:**
- Ne jamais toucher les circuits non isolés
- Travailler seulement avec des outils isolés

PREMIERS SECOURS (en cas d'électrocution)

1. **Si la personne est dans l'impossibilité de se libérer:**
- Couper l'interrupteur principal
- Couper le courant
- Repousser la personne de l'appareil à l'aide d'un objet en matière non conductrice (matière plastique ou boîs)
- Après une électrocution, consulter un médecin.

ATTENTION
NE JAMAIS TOUCHER UNE PERSONNE QUI EST SOUS TENSION, SOUS PEINE DE SUBIR ÉGALEMENT UNE ÉLECTROCUTION

2. **En cas de perte de connaissance de la personne électrocutée:**
- Controller le pouls
- Si nécessaire, pratiquer la respiration artificielle
- Mettre l'accidenté sur le coté latérale et consulter un médecin.

KORRIGENDA

Notieren Sie bitte die untenstehenden Korrekturen an den angegebenen Stellen im Buch und beachten Sie die Hinweise auf die in Kapitel 9 aufgeführten neuen Elektronik-Baugruppen. Diese Blätter können bei Bedarf in den Kapiteln 5 - 7 an den betreffenden Stellen eingereiht werden.

CORRECTIONS

Please note the corrections below at the indicated places in the manual, and take notice of the references to the new electronic assemblies which are listed in Section 9. These sheets can be inserted at the corresponding places of Sections 5...7, if required.

CORRECTIONS

Veuillez noter les corrections dans le livre aux places nommées ici, et aussi les circuits électroniques neufs placés dans la Section 9 et indiqués ici. Ces feuilles peuvent, selon les besoins, être insérées à leurs places respectives dans les sections 5 à 7.

P. 1/12 D

Entzerrungs-Zeitkonstanten:

	76.2 cm/s (30 ips)	38.1 cm/s (15 ips)	19.05 cm/s (7.5 ips)	9.525 cm/s (3.75 ips)
AES:	17.5/ ∞ µs	CCIR: 35/ ∞ µs	70/ ∞ µs	90/3180 µs
AES:	17.5/ ∞ µs	NAB: 50/3180 µs	50/3180 µs	90/3180 µs

P. 1/14 D, E, F

Klirrfaktor: (Aufnahme-Wiedergabe, 1 kHz, gemessen mit Band AGFA PER 528)
Distortion: (Record-reproduce, 1 kHz, measured with tape AGFA PER 528)
Distorsion: (Enregistrement-lecture, 1 kHz, mesurée avec bande AGFA PER 528)

CCIR:	76.2cm/s (30 ips)	38.1cm/s (15 ips)	19.05cm/s (7.5 ips)	9.525cm/s (3.75 ips)
Vollspur, Full track, Pleine piste (320 nWb/m):	≤ 1.0%	≤ 1.0%	≤ 1.5%	≤ 2.0%
Stereo/2-Spur, Stereo/2-track, Stéréo/2 pistes (510 nWb/m):	≤ 1.0%	≤ 1.0%	≤ 1.5%	≤ 2.0%

(Aufnahme-Wiedergabe, 1 kHz, gemessen mit Band SCOTCH 3M 226)
(Record-reproduce, 1 kHz, measured with tape SCOTCH 3M 226)
(Enregistrement-lecture, 1 kHz, mesurée avec bande SCOTCH 3M 226)

NAB:	76.2cm/s (30 ips)	38.1cm/s (15 ips)	19.05cm/s (7.5 ips)	9.525cm/s (3.75 ips)
	400 nWb/m	510 nWb/m	510 nWb/m	510 nWb/m
Vollspur, Full track, Pleine piste:	≤ 0.5%	≤ 0.5%	≤ 0.5%	≤ 0.5%
Stereo/2-Spur, Stereo/2-track, Stéréo/2 pistes:	≤ 0.5%	≤ 0.5%	≤ 0.5%	≤ 0.5%

P. 2/30: D, E, F

Geänderte und neue Befehle:
Modified and new commands:
Ordres modifiés ou neufs:

Befehl Command Ordre	Antwort Answer Réponse	Bedeutung Meaning Sens	seit since dès
SMA_<No.>	<CR><LF>	Setzen der Geräte-Serienummer auf <XXXXXX> (6 Ziffern HEX) Set the recorder's serial No. to <XXXXX> (6 digits HEX) Mettre le numéro de serie de la machine sur <XXXXXX> (6 chiffres HEX)	40/85
EDT	<CR><LF>	Bandabhebebolzen zurückgefahren Tape lifter defeated Ecarteur de bande ramené au repos	40/85
LFT	<CR><LF>	Bandabhebebolzen normale Funktion Tape lifter normal function Ecarteur de bande fonction normale	40/85
ST?		Status-Abfrage/status request/demande état	40/85
	00H<CR><LF>	= TAPE OUT	
	80H<CR><LF>	= TAPE OUT ACHIEVED	
	02H<CR><LF>	= TAPE LOAD	
	82H<CR><LF>	= TAPE LOAD ACHIEVED	
	04H<CR><LF>	= STOP	
	84H<CR><LF>	- STOP ACHIEVED	
	06H<CR><LF>	= REWIND	
	86H<CR><LF>	= REWIND ACHIEVED	
	08H<CR><LF>	= FORWARD	
	88H<CR><LF>	= FORWARD ACHIEVED	
	0AH<CR><LF>	= PLAY	
	8AH<CR><LF>	= PLAY ACHIEVED	
	0CH<CR><LF>	= RECORD	
	8CH<CR><LF>	= RECORD ACHIEVED	
	0EH<CR><LF>	= EDIT	
	8EH<CR><LF>	= EDIT ACHIEVED	
	10H<CR><LF>	= LOCATE	
	90H<CR><LF>	= LOCATE ACHIEVED	
	12H<CR><LF>	= LOCATE + PLAY	
	14H<CR><LF>	= TAPE DUMP	
	94H<CR><LF>	= TAPE DUMP ACHIEVED	

P. 3/18 D, E, F

4. Abschnitt:
- Leichter Druck auf die beiden Bremshebel (Pfeile) löst die Bremsen so weit, dass das Bremschassis vorsichtig abgehoben werden kann.

4th paragraph:
- Press lightly on the two brake levers (arrows) to release the brakes to the point where the brake chassis can be carefully lifted.

4ième paragraphe:
- Une légère pression sur les deux leviers de freinage (flèches) détend les freins se telle sorte que le chassis des freins puisse être soulevé avec soin.

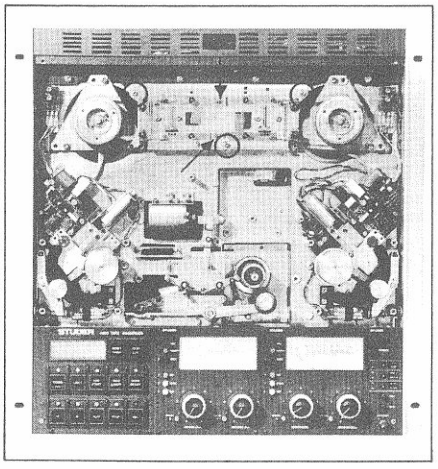

P. 3/41 D, E, F

Der folgende Abschnitt ersetzt den 4. Abschnitt:

- Spulenkern von L1 im Uhrzeigersinn vorsichtig bis zum Anschlag eindrehen. Von dieser Position aus den Spulenkern 2 volle Umdrehungen im Gegenuhrzeigersinn zurückdrehen. Oszilloskop an TP1 des Tonmotor-Steuerungsprints anschliessen (Frequenz ca. 6 MHz). Das Signal darf nicht verschwinden, wenn die Isolation der beiden verdrillten Litzen zum kapazitiven Abtaster berührt wird.

The following paragraph replaces the 4. paragraph:

- Carefully turn the tuning core of L1 to the clockwise stop. Starting from this position, turn the core two complete turns counterclockwise. Connect oscilloscope to TP1 of the capstan motor control (Frequency approx. 6 MHz). The signal should not disappear when touching the insulation of the two twisted stranded wires that lead to the capacitive sensor.

Le 4ième paragraphe est remplacé par le suivant:

- Tourner soigneusement le noyau d'accord au sens des aiguilles d'une montre jusq'à l'arrêt. De cette position, tourner le noyau 2 tours au sens inverse des aiguilles d'une montre. Raccorder l'oscilloscope à TP1 de la commande du moteur de cabestan (fréquence env. 6 MHz). Le signal ne doit pas disparaître lorsqu'on touche l'isolation des deux câbles torsadés du capteur capacitif.

P. 3/42 F

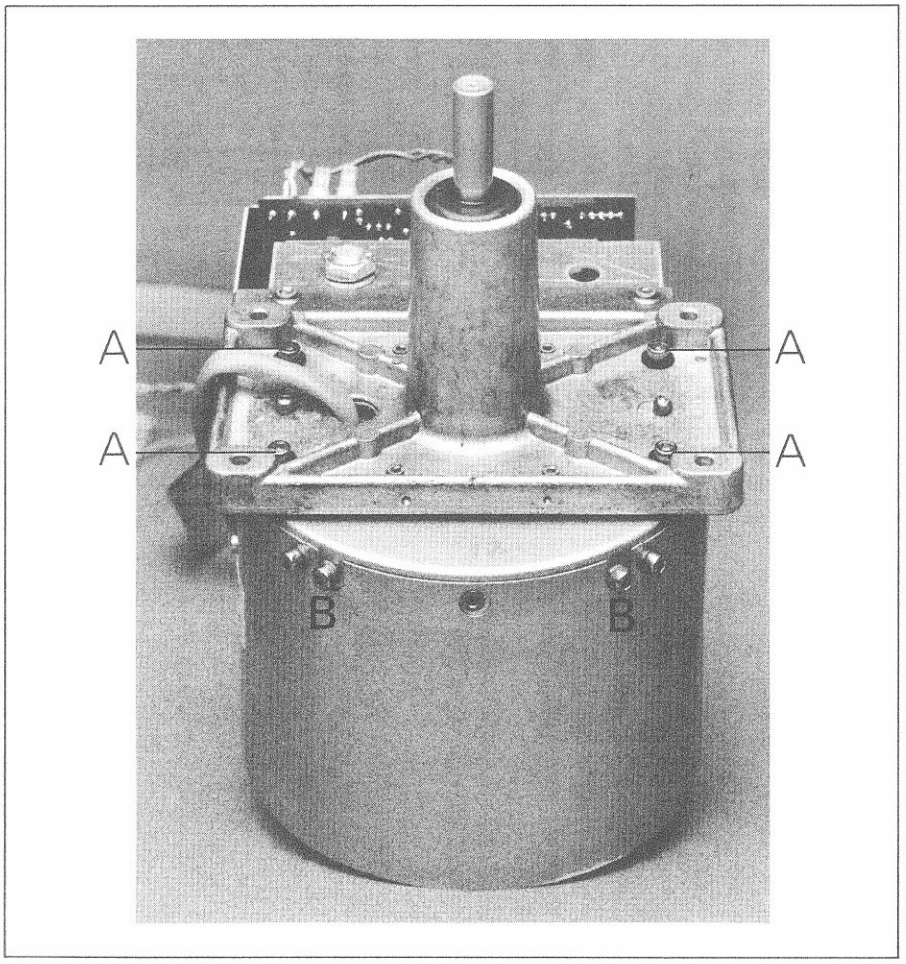

2 vis marqués "[B]".

P. 5/8 D, E, F

T-BUSSW Bus switching signal; 1 = RS232, 0 = Data save.

T-DRVENB Drivers ser. IF enable/disable; 1 @ drivers enabled.

P. 5/41 D, E, F

STABILIZER PCB 1.810.770-81 (page 5/41) -> 1.810.770-82 (page 9/1)
Modified components:
- IC6: IPS 3524 BN.
- R44: 4.7 kΩ, 57.11.4472 .

New components:
- Inductor L3: 62.01.0115. Inserted between IC6/pin8 and Ground terminal of C14 (2200 µF).

STABILIZER PCB 1.810.770-82 (page 9/1) -> 1.810.770-83 (page 9/1)
Modified components:
C10: 47 µF, 59.26.0470 .
D2: 12 V, 50.04.1117 .
D4: 12 V, 50.04.1117 .
R1: 1.5 kΩ, 57.11.3152 .
R6: 1.5 kΩ, 57.11.3152 .

STABILIZER PCB 1.810.770-83 (page 9/1) -> 1.810.770-84 (page 9/3)
Modified PCB, 1.810.770-13 .

P. 5/51 D, E, F

- Modified title:

MP UNIT A810 PCB 1.820.780-82 GR20 ELMO1 "ESE"
1.810.780-20/-21 GR20 ELMO1 .
- Delete: "~~▲Has been modified for 1.820.752-84~~-".

New or modified components for 1.820.780-82:
- C5: 10 µF, 59.26.2100 .
- C8, C9: 33 pF, 59.34.2330 .
- Y1: 4.9152 MHz, 89.01.0560 .

MP UNIT A810 PCB 1.820.780-82 (page 5/51) -> 1.810.780-20 (page 5/51):
- Same circuit, new software 40/85 .

MP UNIT A810 PCB 1.810.780-20 (page 5/51) -> 1.810.780-21 (page 5/51):
- Same circuit, new software 25/86 .

P. 5/69 D, E, F

SERIAL REMOTE CONTROLLER 1.810.751-00 (page 5/69) -> 1.810.751-81 (page 9/5)
Modifications on PCB:
- Cut conductor between IC3, pins9/10 .
- Make new connection from IC2, pin8 to IC3 pin9.

SERIAL REMOTE CONTROLLER 1.810.751-81 (page 9/5) -> 1.810.751-82 (page 9/5)
New components:
- R33 2.2 kΩ, 57.11.4222, from IC4 pin9 to ground.

P. 6/6 D, E, F

Correct designation of connectors P5 and P6:
- P5: Tape tension sensor right
- P6: Tape tension sensor left.

P. 6/7 D, E, F

D24, BAV20, not used.

SPOOLING MOTOR CONTROLLER 1.810.760-81 (page 6/7) -> 1.810.760-82 (page 9/7)
New components:
- L3, from connection point ACA-125 (red) to fuse F1.

P. 6/8 D, E, F

Correct designation of connectors P5 and P6:
- P5: Tape tension sensor right
- P6: Tape tension sensor left.

P. 6/9 D, E, F

TAPE TENSION SENSOR PCB LEFT 1.810.730-82 GRP27 "ESE":
Modified components:
- C1: 22 nF, 59.06.0223 .

P. 6/17 D, E, F

VARISPEED CONTROL PCB 1.810.762-81 (page 6/17) -> 1.810.762-82 (page 9/9):
Modified components:
- C3: 1000 µF, 59.99.1700 .

Modifications on PCB:
- Cut conductor from IC2, pin7 to switch S1a, pin7 (upper connection point in diagram).
- Make new connection from IC4, pin1 to switch S1b, pin4 (upper connection point in diagram).

P. 7/5 D, E, F

Modified components:
- C2: 47 µF (bipolar), 59.99.0401 .

REPRODUCE AMPLIFIER PCB 1.820.710.00/-81/-82 (page 7/5) -> 1.820.710-83 (page 9/19):
Modified components:
- C5: 100 µF, 59.99.5101 .
- R17: 10 kΩ,57.11.4103 .

New components (refer to component layout diagram, page 9/20):
- D4: BAT85, 50.04.0127 (Anode to emitter Q1, cathode to ground).
- Q3: J111, 50.03.0216 .

REPRODUCE AMPLIFIER PCB 1.820.710-83 (page 9/19) -> 1.820.710-84 (page 9/21):
Modified components:
- PCB 1.820.714-14 .
- C8: 47 pF, 59.34.2470 .
- C9: not used.
- D4: 1N4448, 50.04.0125 .
- Q1: BC550C, 50.03.0407 .
- Q2: BC337, 50.03.0516 .
- Q3: J111, 50.03.0216 .
- R3: 130 kΩ, 57.11.3134 .
- R4: 180 kΩ, 57.11.4184 .

Additional components:
- C44: 0.1 µF, 59.06.0104 .
- D5: 24 V, 50.04.1121
- Q4: BC550C, 50.03.0407 .
- R65: 10 MΩ, 57.11.5106 .
- R66: 2.2 kΩ, 57.11.4222 .
- R67: 1.0 kΩ, 57.11.4102 .

P. 7/43 D, E, F

Insert following text (below the diagram):
For 1.820.722.00:
- IC2: MC6803, 50.16.0105
- Y1: 4.000 MHz, 89.01.0550

P. 8/10 D, E, F
Pos. 17:
1 1.020.850.24 Umlenkbolzen rechts
Right-hand tape guide pin

P. 8/14 D, E, F
1 1.810.150.81 Umlenkrolle rechts kompl.
Right-hand guide roller compl.
Pos. 04:
1 1.810.116.81 Dämpfungspumpe rechts kompl.
Dashpot right compl.

P. 8/16 D, E, F
Pos. 05:
1 1.810.115.81 Dämpfungspumpe links kompl.
Dashpot left compl.

P. 8/35 D, E, F
Pos. 17 (Zusätzlich / in addition):
1 1.820.570.02 Blindplatte für Monitor
Dummy plate monitor

9 ANHANG (INHALT) / APPENDIX (CONTENTS) / ANNEXE (TABLE DES MATIERES)

				PAGE
STABILIZER PCB		1.810.770-82/-83	GR7	9/1
STABILIZER PCB		1.810.770-84	GR7	9/3
SERIAL REMOTE CONTROLLER		1.810.751-81/-82	GR20 EL3	9/5
- BUS DISPLAY PCB 1.810.757-00				9/5
SPOOLING MOTOR CONTROLLER	■	1.810.760-82	GR24	9/7
- CONNECTION PCB		1.810.726-00	GR9	9/7
- CONNECTION PCB		1.810.727-00	GR10	9/7
VARISPEED CONTROL PCB	■	1.810.762-82	GR42	9/9
LINE AMPLIFIER WITH TRANSFORMERS	■	1.820.714-82	GR20 EL11/16	9/11
LINE AMPLIFIER WITH TRANSFORMERS	■	1.820.714-83	GR20 EL11/16	9/13
LINE AMPLIFIER (TRANSFORMERLESS)	■	1.820.715-00/-81	GR20 EL11/16	9/15
- LINE OUTPUT AMPLIFIER PCB	■	1.820.862-00		9/15
REPRODUCE AMPLIFIER PCB	■	1.820.710-83	GR20 EL10/15	9/19
REPRODUCE AMPLIFIER PCB	■	1.820.710-84	GR20 EL10/15	9/21
TIME CODE READ/WRITE UNIT PCB	■	1.820.721-83/-84	GR20 EL16	9/23
TIME CODE READ/WRITE UNIT PCB	■	1.820.721-84	GR20 EL16	9/25

■=ELECTROSTATICALLY SENSITIVE ASSEMBLY

SI (Service information) No. 95/86 (A810 Software 40/85)

SI (Service information) No. 99/86 (A810 Software 25/86)

SECTION 1 GENERAL REFERENCES page

1.	GENERAL REFERENCES	1/1
1.1	QUICK-REFERENCE DISCRIPTION	1/1
1.2	STANDARD VERSIONS	1/3
1.3	OPTIONS	1/7
1.4	ACCESSORIES	1/8
1.5	TECHNICAL SPECIFICATIONS	1/10
1.5.1	Dimensions	1/16
1.5.2	Packing	1/18
1.5.3	Level diagrams	1/19
1.6	STANDARD CALIBRATION VALUES	1/20
1.7	MAINTENANCE HINTS FOR THE SERVICE PERSONNEL	1/21
1.7.1	Abbreviations	1/21
1.7.2	Powers of ten	1/22
1.7.3	Code letters and colors	1/22
1.7.4	Electrostatically sensitive semiconductor devices "ESE"	1/24

1. GENERAL REFERENCES

1.1 QUICK-REFERENCE DISCRIPTION

By virtue of its compact and highly rigid construction, its inherent system flexibility, and the superior operating convenience achieved by the microprocessor control system, the STUDER A810 tape recorder is universally suited for applications in broadcarsting or television, for use in studios or on OB vans, in theaters, film studios, and scientific institutes.

Some of its outstanding features include:

- Highly rigid, die-cast aluminium alloy chassises for tape transport, head-block assembly, pressure roller assembly, and other assemblies.
- Manually manipulatable head shield above record and reproduce heads; can stay closed during spooling.
- Capstan motor servo control with quartz-conrolled reference and capacitive sensing tacho system for highly accurate tape speeds.
- Gentle tape handling is ensured by electronically controlled tape tension, servo-controlled AC spooling motors, and non-contacting tape tension sensors. Pulse-width-modulated spooling motor control minimizes power dissipation and requires no separate heat sinking.
- Accurate electronic tape timer with real-time display; photoelectric scanning of guide roller rotation by opto switches.
- Convenient editing: four spooling speeds; the high end of the reproduce frequency response is de-emphasized for speaker protection; tape lift during spooling can be defeated either by pressing a button or mechanically by shifting the pressure roller.
  Blocked tape tension sensors and decreased braking torque in STOP mode.
  A tape marker and built-in tape scissors are available as options.
- Monitor speaker built into tape transport cover (except console versions with penthouse where the monitor speaker is built into the panel)

The high system flexibility means that a suitable A810 version is available for any type of application:

- Standard types in mono, 2-channel or stereo versions, with or without VU-meter panel.
- Operates in any position from horizontal to vertical, suited for 19" rack or console mounting. Available as a box-mounted model with removable lid or portable model with lateral handles or wooden side panels with handles.
- LS versions:
  3 Tape speeds (3.75 - 7.5 - 15 ips) selectable with front-panel rotary switch. Time code operation not possible at 3.75 ips.
- HS versions:
  4 Tape speeds (3.75 - 7.5 - 15 - 30 ips) selectable with front-panel rotary switch. Time code operation not possible at 3.75 ips.

- Inputs and outputs balanced and floating, available with or without input/output transformers.
- Switch for NAB or CCIR equalization (7.5 and 15 ips).
- Tape bias switch for two tape formulations with different calibration data.

- Sync facility, zerolocator, and 4-address transferlocator (autolocator) included as standard features.
- Output selector buttons: INP (input), REP (reproduce) and SYNC.
- VU-meter panel with SAFE/READY switch, record and reproduce level controls, buttons for bypassing the level controls (calibrated, with line level).
  Internally switchable level meter: VU or PPM indication.
- Selectable line voltage: 100, 120, 140, 200, 220, 240 VAC ±10%, 50...60 Hz.
- Terminals for connecting fader start, parallel remote control and varispeed control.

The following features are available as options:

- For synchronizing: time code system for 2-channel models; code channel as third track between the stereo audio channels.
- Mono/stereo switch for stereo and 2-channel recorder.
- Test generator (60, 125 Hz, 1, 10, 16 kHz).
- Remote controller to serial interface: for storing (e.g. on tape) audio parameters for quick audio setup or for operation in conjunction with a terminal (RS 232 interface).

Maximum operating convenience due to microprocessor control:

- The last operating state of the recorder is preserved when power is switched off: tape counter, locator addresses, audio parameters, speed, mono/-stereo or tape A/B and NAB/CCIR.
- If a channel controller exists, the audio signal is automatically switched to REPRO and SAVE when power is switched on again.
- Drop-in activated by pressing only the REC button in reproduce mode or by pressing PLAY and REC (depending on internal programming).
- Drop-out from record mode by pressing the PLAY key.
- Reduced spooling speed: the full spooling speed (approx. 10 m/s) can be switched down to 7, 4 or 1 m/s.
- Zerolocator: automatic search of tape address (timer reading) 00:00.
- Transferlocator LOC 1 ... LOC 4: for storing and automatic searching 4 different tape addresses. Stored addresses can be displayed without executing the actual search command.
- Soft keys: the following internally programmable functions can be assigned to the keys LOC 2 ... LOC 4:
  LOC START (search last PLAY address)
  LIFTER (defeats tape lift during spooling)
  FADER (local command keys disabled, only fader start possible)
  TAPE DUMP (dump edit mode, take-up motor is switched off)
  REM CONTR (local command keys disabled, operation only with remote control)
  CODE READY (enables recording on time code channel)
  These keys feature special recesses for attaching self-adhesive function labels.

- Audio setup via microprocessor. The following audio parameters can be programmed with the keys accessible from the front below the operator panel (NAB and CCIR equalization each for two types of tape):
  Reproduction / Sync: LEVEL, TREBLE, BASS, EQUALIZATION
  Recording: LEVEL, TREBLE, BIAS, EQUALIZATION
  Resolution 256 steps each, hexadecimal format on tape timer display.
  The audio parameters remain stored even after the recorder has been switched off. They can also be saved by copying them through the serial remote port to an external storage medium from where they can subsequently be reloaded; this means that automatic and reproducible audio set-up of the A810 is possible.

- Internal confidence test system with error diagnostics for the main functions:
  Automatic check for correct functioning when the recorder is switched on; a subset of the test is periodically repeated.

1.2 STANDARD VERSIONS

A810-1 FULL-TRACK VERSIONS

A810-1
Article No. 60.118.10110

Portable recorder for 6.25 mm tape. Full-track. Audio channel control (INPUT/-SYNC/REPRO/READY/SAFE). Built-in monitor speaker. Chassis version.
Three tape speeds 3.75 - 7.5 - 15 ips selectable with front-panel rotary switch.

A810-1 HS
Article No. 60.118.10111

Portable recorder for 6.25 mm tape. Full-track. Audio channel control (INPUT/-SYNC/REPRO/READY/SAFE). Built-in monitor speaker. Chassis version.
Four tape speeds 3.75 - 7.5 - 15 - 30 ips selectable with front-panel rotary switch.

A810-1 VU
Article No. 60.118.10120

Portable recorder for 6.25 mm tape. Full-track. VU-meter including audio channel control (INPUT/SYNC/REPRO/READY/SAFE). Built-in monitor speaker. Chassis version.
Three tape speeds 3.75 - 7.5 - 15 ips selectable with front-panel rotary switch.

A810-1 VU HS
Article No. 60.118.10121

Portable recorder for 6.25 mm tape. Full-track. VU-meter including audio channel control (INPUT/SYNC/REPRO/READY/SAFE). Built-in monitor speaker. Chassis version.
Four tape speeds 3.75 - 7.5 - 15 - 30 ips selectable with front-panel rotary switch.

A810-1 VUK
Article No. 60.118.10130

Recorder for 6.25 mm tape. Full-track. VU-meter including audio channel control (INPUT/SYNC/REPRO/READY/SAFE) and monitor speaker built into external panel. Recorder prepared for installation in console with penthouse.
Three tape speeds 3.75 - 7.5 - 15 ips selectable with front-panel rotary switch.

A810-1 VUK HS
Article No. 60.118.10131

Recorder for 6.25 mm tape. Full-track. VU-meter including audio channel control (INPUT/SYNC/REPRO/READY/SAFE) and monitor speaker built into external panel. Recorder prepared for installation in console with penthouse.
Four tape speeds 3.75 - 7.5 - 15 - 30 ips selectable with front-panel rotary switch.

A810-0.75 STEREO VERSIONS

A810-0.75
Article No. 60.118.10210

Portable recorder for 6.25 mm tape. Stereo, 0.75 mm track separation. Full-track erase head. Audio channel control (INPUT/SYNC/REPRO/READY/SAFE). Built-in monitor speaker. Chassis version.
Three tape speeds 3.75 - 7.5 - 15 ips selectable with front-panel rotary switch.

A810-0.75 HS
Article No. 60.118.10220

Portable recorder for 6.25 mm tape. Stereo, 0.75 mm track separation. Full-track erase head. Audio channel control (INPUT/SYNC/REPRO/READY/SAFE). Built-in monitor speaker. Chassis version.
Four tape speeds 3.75 - 7.5 - 15 - 30 ips selectable with front-panel rotary switch.

A810-0.75 VU
Article No. 60.118.10230

Portable recorder for 6.25 mm tape. Stereo, 0.75 mm track separation. Overlapping erasure. VU-meter including channel control (INPUT/SYNC/REPRO/-READY/SAFE). Built-in monitor speaker. Chassis version.
Three tape speeds 3.75 - 7.5 - 15 ips selectable with front-panel rotary switch.

A810-0.75 VU HS
Article No. 60.118.10240

Portable recorder for 6.25 mm tape. Stereo, 0.75 mm track separation. Overlapping erasure. VU-meter including channel control (INPUT/SYNC/REPRO/-READY/SAFE). Built-in monitor speaker. Chassis version.
Four tape speeds 3.75 - 7.5 - 15 - 30 ips selectable with front-panel rotary switch.

A810-0.75 VUK
Article No. 60.118.10250

Recorder for 6.25 mm tape. Stereo, 0.75 mm track separation. Overlapping erasure. VU-meter including channel control (INPUT/SYNC/REPRO/READY/SAFE) and monitor speaker built into external panel. Recorder prepared for installation in console with penthouse.
Three tape speeds 3.75 - 7.5 - 15 ips selectable with front-panel rotary switch.

A810-0.75 VUK HS
Article No. 60.118.10260

Recorder for 6.25 mm tape. Stereo, 0.75 mm track separation. Overlapping erasure. VU-meter including channel control (INPUT/SYNC/REPRO/READY/SAFE) and monitor speaker built into external panel. Recorder prepared for installation in console with penthouse.
Four tape speeds 3.75 - 7.5 - 15 - 30 ips selectable with front-panel rotary switch.

A810-2/2 TWO-TRACK VERSIONS

A810-2/2
Article No. 60.118.10310

Portable recorder for 6.25 mm tape. Two-track, 2mm track separation, overlapping erasure. Audio channel control (INPUT/SYNC/REPRO/READY/SAFE). Built-in monitor speaker.
Chassis version.
Three tape speeds 3.75 - 7.5 - 15 ips selectable with front-panel rotary switch.

A810-2/2 HS
Article No. 60.118.10311

Portable recorder for 6.25 mm tape. Two-track, 2mm track separation, overlapping erasure. Audio channel control (INPUT/SYNC/REPRO/READY/SAFE). Built-in monitor speaker. Chassis version.
Four tape speeds 3.75 - 7.5 - 15 - 30 ips selectable with front-panel rotary switch.

A810-2/2 VU
Article No. 60.118.10320

Portable recorder for 6.25 mm tape. Two-track, 2mm track separation, overlapping erasure. VU-meter incl. channel control (INPUT/SYNC/REPRO/READY/SAFE). Built-in monitor speaker. Chassis version.
Three tape speeds 3.75 - 7.5 - 15 ips selectable with front-panel rotary switch.

A810-2/2 VU HS
Article No. 60.118.10330

Portable recorder for 6.25 mm tape. Two-track, 2mm track separation, overlapping erasure. VU-meter incl. channel control (INPUT/SYNC/REPRO/READY/SAFE). Built-in monitor speaker. Chassis version.
Four tape speeds 3.75 - 7.5 - 15 - 30 ips selectable with front-panel rotary switch.

A810-2/2 VUK
Article No. 60.118.10340

Portable recorder for 6.25 mm tape. Two-track, 2mm track separation, overlapping erasure. VU-meter incl. channel control (INPUT/SYNC/REPRO/READY/SAFE) and monitor speaker built into external panel. Recorder prepared for installation in console with penthouse.
Three tape speeds 3.75 - 7.5 - 15 ips selectable with front-panel rotary switch.

A810-2/2 VUK HS
Article No. 60.118.10350

Portable recorder for 6.25 mm tape. Two-track, 2mm track separation, overlapping erasure. VU-meter incl. channel control (INPUT/SYNC/REPRO/READY/SAFE) and monitor speaker built into external panel. Recorder prepared for installation in console with penthouse.
Four tape speeds 3.75 - 7.5 - 15 - 30 ips selectable with front-panel rotary switch.

A810-2 TC TWO-TRACK VERSIONS WITH TIME CODE

A810-2 TC
Article No. 60.118.10410

Portable recorder for 6.25 mm tape. Two-track, 2mm track separation. Audio channel control (INPUT/SYNC/REPRO/READY/SAFE). Code channel control by means of programmable key (READY/SAFE). Built-in monitor speaker. Chassis version.
Three tape speeds 3.75* - 7.5 - 15 ips selectable with front-panel rotary switch.
* Time code operation not possible at 3.75 ips!

A810-2 TC HS
Article No. 60.118.10411

Portable recorder for 6.25 mm tape. Two-track, 2mm track separation. Audio channel control (INPUT/SYNC/REPRO/READY/SAFE). Code channel control by means of programmable key (READY/SAFE). Built-in monitor speaker.
Chassis version.
Four tape speeds 3.75* - 7.5 - 15 - 30 ips selectable with front-panel rotary switch.
* Time code operation not possible at 3.75 ips!

A810-2 TC VU
Article No. 60.118.10420

Portable recorder for 6.25 mm tape. Two-track, 2mm track separation. VU-meter including audio channel control (INPUT/SYNC/REPRO/READY/SAFE). Code channel control by means of programmable key (READY/SAFE). Built-in monitor speaker.
Chassis version.
Three tape speeds 3.75* - 7.5 - 15 ips selectable with front-panel rotary switch.
* Time code operation not possible at 3.75 ips!

A810-2 TC VU HS
Article No. 60.118.10421

Portable recorder for 6.25 mm tape. Two-track, 2mm track separation. VU-meter including audio channel control (INPUT/SYNC/REPRO/READY/SAFE). Code channel control by means of programmable key (READY/SAFE). Built-in monitor speaker.
Chassis version.
Four tape speeds 3.75* - 7.5 - 15 - 30 ips selectable with front-panel rotary switch.
* Time code operation not possible at 3.75 ips!

A810-2 TC VUK
Article No. 60.118.10430

Recorder for 6.25 mm tape. Two-track, 2mm track separation. VU-meter including audio channel control, code channel control (INPUT/SYNC/REPRO/READY/SAFE), and monitor speaker built into external panel. Recorder prepared for installation in console with penthouse.
Three tape speeds 3.75* - 7.5 - 15 ips selectable with front-panel rotary switch.
* Time code operation not possible at 3.75 ips!

A810-2 TC VUK HS
Article No. 60.118.10431

Recorder for 6.25 mm tape. Two-track, 2mm track separation. VU-meter including audio channel control, code channel control (INPUT/SYNC/REPRO/READY/SAFE), and monitor speaker built into external panel. Recorder prepared for installation in console with penthouse.
Four tape speeds 3.75* - 7.5 - 15 - 30 ips selectable with front-panel rotary switch.
* Time code operation not possible at 3.75 ips!

1.3 OPTIONS

Varispeed

- For chassis and portable versions: part No. 20.810.871.00. Not possible for recorders with 2 VU-meters!
  Filler panel (1 module, part No. 1.810.002.04) included.

- For console versions: part No. 20.810.872.00.

Channel control

For separate control of the second audio channel on A810.0.75 recorders, or separate control of the time code channel on A810-2 TC recorders with TIME CODE READ/WRITE UNIT 1.810.724 and LC display part No. 20.810.933.00.

For separate control of the time code channel on A810-2 TC recorders with TIME CODE READ/WRITE UNIT 1.820.721.81/82/83/84 and LED indicator part No. 20.810.934.00.

A filler panel (1 module, part No. 1.810.002.04) must be ordered separately for the A810-2 TC.

Tape scissors, marking device

Tape scissors, part No. 20.810.891.00.

Marking device, part No. 20.810.892.00

Tape scissors and marking device, part No. 20.810.893.00.

Mono/stereo switch, test generator

Mono/stereo switch, part No. 20.810.902.00.

Test generator, part No. 20.810.903.00 (for full-track and 2-channel recorders).

Mono/stereo switch and test generator, part No. 20.810.903.00 (for recorders with mono/stereo selector).
Only possible with software release 13/83 or later.

Interface for serial remote control

Printed circuit board 1.810.751.00 and cable harness with connectors, part No. 20.810.881.00.

Control for noise reduction system

- For chassis and portable versions, part No. 20.810.943.00

- For console versions, part No. 20.810.944.00.

1.4 ACCESSORIES

Supplied accessories
(Part No. 20.020.302.25)

Allen key 2.0 mm	1 pc.	(Part No. 26.06.1020)
Allen key 4.0 mm	1 pc.	(Part No. 26.06.1040)
Stud driver 3.0 mm	1 pc.	(Part No. 10.258.003.10)
Stud driver 2.5 mm	1 pc.	(Part No. 10.258.003.09)
Microfuse 500 mA, 5x20 mm	5 pcs.	(Part No. 51.01.0114)
Microfuse 1.6 A, 5x20 mm	5 pcs.	(Part No. 51.01.0119)
Microfuse 3.15 A, 5x20 mm	5 pcs.	(Part No. 51.01.0122)
Microfuse 5.0 A, 5x20 mm	5 pcs.	(Part No. 51.01.0124)
NAB adapter	2 pcs.	(Part No. 89.01.0354)
Power cord, 2.5 m, 3x1 mm2 EU-plug	1 pc.	(Part No. 10.223.001.01)
Spare bulb for VU meter	2 pcs.	(Part No. 51.02.0144)
Conversion kit parallel remote control connector	1 pc.	(Part No. 1.810.071.00)

Console
Any chassis version of the tape recorder can be installed in the basic console version. It is equipped with lockable casters. Height: 840 mm. Part No. 1.038.880.00.
In addition the following items must be ordered:
- Rack base, Part No. 1.038.890.00 (for installing the synchronizer and/or noise reduction system),

and
- Rear cover plate, part No. 1.038.885.00 (no ext. VU panel), or
- Rear cover plate with shelf for tapes, etc. part No. 1.038.884.00 or
- Low penthouse, part No. 1.038.886.00 (ext. VU panel), or
- High penthouse, part No. 1.038.888.00 (ext. VU panel and synchronizer control panel).

Wooden side panels
A set of wooden side panels with hinged handles is available as a complete set, part No. 1.810.077.00.

Handles for chassis versions
A set of handles (not hinged) is available for the A810 chassis versions, part No. 1.810.075.00.

Tape transport remote control
The tape transport remote control 1.328.200.81 in the desk-top housing, with a 15 m cable, supports the remote control of all tape deck functions, including
- Decreasing the spooling speed (in 3 steps below the standard speed)
- RECAP (fast rewind for as long as key is held down, then PLAY)
- LOC 1 (storing and automatic search of a tape address)
- LIFTER (defeats tape lift during spooling)
- VARISPEED (with external TTL signal)

Adapter for self-supporting pancake
A reel flange (adapter) part No. 1.013.046.00 is required for flangeless hubs (DIN 45 515).

Extension board

Part No. 1.820.799.00, used in conjunction with alignments on audio and logic assemblies.

REVOX tape splicing kit

Comprises a professional cutting and splicing block, a cutting blade, splicing tabs, and a wax pencil; kit No. 10.030.452.40.

STUDER cleaning kit in carrying case

Comprises 1 bottle of soundhead cleaner, 1 bottle of aluminite cleaner, lint-free nonwoven fleece, one buckskin, kit No. 10.496.010.00.

- Soundhead cleaner, replacement bottle Part No. 10.496.021.00
- Soundhead cleaner, 1 liter Part No. 10.496.022.00
- Aluminite cleaner, replacement bottle Part No. 10.496.025.00
- Aluminite cleaner, 1 liter Part No. 10.496.026.00

Aluminium case for A810

Three types of aluminium carrying cases are available:

- Aluminium case for transporting a portable A810 equipped with wooden side panels: Part No. 10.386.001.03.
- Aluminium case for transporting an A810 chassis version: Part No. 10.368.002.04.
- Aluminum case for installing an A810 chassis version: Part No. 10.386.001.01.

  The recorder can be put into operation after the cover and the rear panel have been removed.

  Kit No. 1.810.076.00 is required for installing the chassis version into the carrying case 10.386.001.01.

Cover for portable version

Wooden cover, protects headblock and tape guidance elements during transport. Two 26.5 cm ciné or 10.5" NAB reels can be stored in the cover; or DIN spindles and cables can be accommodated by rescrewing the three-pronged adapter.

Tool case

- Part No. 20.020.001.06 (220 V version)
- Part No. 20.020.001.56 (110 V version)

Comprises:

1 Set of hexagon-socket-screw keys, spare fuses, replacement lamps, small parts, 1 extension board, 1 demagnetizing choke, various screwdrivers, various pliers, one pair of tweezers, cylindrical flashlight, soldering iron (WELLER) with holder, spring dynamometers, various open-end wrenches, screwdriver for recessed-head screws (PHILLIPS), cleaning material, gauges for adjusting the tape tension sensors, etc.

Additional manuals

- Operating and service instructions, ENGLISH, No. 10.23.5211 (Ed. 1185)
- Operating and service instructions, FRENCH, No. 10.23.5221 (Ed. 1285)
- Operating and service instructions, GERMAN, No. 10.23.2961 (Ed. 1185)
- Operating instructions, ENGLISH, No. 10.23.2951
- Operating instructions, FRENCH, No. 10.23.5230
- Operating instructions, GERMAN, No. 10.23.2941

1.5 TECHNICAL SPECIFICATIONS

These specifications apply for operation in horizontal position

Tape speeds:

Type HS:
30 - 15 - 7.5 - 3.75 ips
(76.2 - 38.1 - 19.05 - 9.525 cm/s)

Type LS (standard programming):
15 - 7.5 - 3.75 ips
(38.1 - 19.05 - 9.525 cm/s)

Variable speed (with varispeed option):
±7 semitones from nominal speed

Tape speed deviation:

max. ± 0.2% from nominal speed

Tape slip:

max. 0.1%

Tape reels:

NAB, EIA (CINE), DIN
max. diameter 11.1 " (282 mm)
max. reel capacity 3280 ft. (1000 m) with professional-quality tape
(tape thickness: 50 um)

Tape width:

1/4 " (6.3 mm)

Wow and flutter:

Peak weighted according to DIN 45507 or IEC Publ. 386, ambient temperature 68° F (20° C)

30 ips	15 ips	7.5 ips	3.75 ips
(76.2 cm/s)	(38.1 cm/s)	(19.05 cm/s)	(9.525 cm/s)
max. 0.04%	max. 0.05%	max. 0.07%	max. 0.12%

Start time:

max. 0.5 s for 15 ips and 1000 m tape on DIN hub or
730 m tape on NAB reel
(to attain double value of flutter specification)

Tape timer:

5-digit LCD displays hours, minutes and seconds for all tape speeds
counts past zero with leading negative sign.
Range: 1 h 59 min 59 s to -1 h 59 min 59 s
or
5-digit LED display, same as LCD except:
Range: 9 h 59 min 59 s to -59 min 59 s
Time code level indicated with LED behind last seconds position.

Winding time:

approx. 150 s for 1000 m tape; approx. 120 s for 730 m tape.

Stopping time from spooling:

max. 3 s

Tape tension:

Reproduce and record:
0.75 N (75 p) nominal, adjustable ±0.15 N (±15 p)

Spooling:
0.75 N (75 p) nominal, adjustable 0.4 - 1.0 N (40 - 100 p)

Peak tape tension for start, stop, and reversal of spooling direction:
6 N (600 p) nominal, adjustable 3 - 6 N (300 - 600 p)

Inputs:

Balanced and floating
Impedance ≥ 10 kΩ, 30 Hz ... 20 kHz

Input level:

- Nominal input level relative to reference magnetic flux:
  +6, +10, +14, +16 dBm; internally programmable
- Nominal input level relative to operating level (according to NAB):
  0, +4, +8, +10 dBm; internally programmable
  (internal adjustment range of the magnetic flux with above input levels: 100 - 1000 nWb/m)

Recorders with VU-meter panel and input/output level controls:
max. 10 dB increase in input sensitivity with input level control in uncalibrated mode.

Maximum input level:
- with input transformer: +24 dBm
- without input transformer: +28 dBm (+26 dBm, if the nominal input level relative to operating level is set to 0/6 dBm)

Outputs:

balanced and floating, with output transformer
Impedance ≤ 50 Ω, 30 Hz ... 20 kHz
Load ≥ 200 Ω
or
electronically balanced, without output transformer
Impedance ≤ 30 Ω, 30 Hz ... 20 kHz
Load ≥ 200 Ω.

Output level:

- nominal output level relative to reference magnetic flux:
  +6, +10, +14, +16 dBm; internally programmable
- nominal output level relative to operating level (according to NAB):
  0, +4, +8, +10 dBm; internally programmable
  (internal adjustment range of reproduce gain for operating magnetic flux of 100 - 1000 nWb/m)

Recorders with VU-meter panel and input/output level controls:
max. 10 dB increase in reproduce gain with output level control in uncalibrated mode.
Maximum output level:
- with output transformer: +24 dBm (load ≥ 200 Ω)
- without output transformer:
  - balanced load ≥ 200 Ω: +26 dBm
  - unbalanced load ≥ 200 Ω: +24 dBm
  - balanced load ≥ 600 Ω: +30 dBm (+26 dBm, if the nominal output level relative to operating level is set to 0/6 dBm)
  - unbalanced load ≥ 600 Ω: +24 dBm

Equalizations:

NAB and CCIR, switch-selectable

Equalization time constants:

	30 ips (76.2 cm/s)	15 ips (38.1 cm/s)	7.5 ips (19.05 cm/s)	3.75 ips (9.525 cm/s)
AES:	17.5/∞ us	CCIR: 35/∞ us	70/∞ us	90/3180 us
AES:	17.5/∞ us	NAB: 50/3180 us	50/3180 us	90/3180 us

Frequency response:

Record-reproduce:

	30 ips (76.2 cm/s)	15 ips (38.1 cm/s)	7.5 ips (19.05 cm/s)	3.75 ips (9.525 cm/s)
±2 dB:	40 Hz ... 22 kHz	30 Hz ... 20 kHz	30 Hz ... 16 kHz	30 Hz ... 10 kHz
±1 dB:	40 Hz ... 20 kHz	30 Hz ... 18 kHz	30 Hz ... 12 kHz	30 Hz ... 8 kHz

Reproduction from record head (SYNC reproduction)

- Amplifier programmed for "narrow band":

	30 ips (76.2 cm/s)	15 ips (38.1 cm/s)	7.5 ips (19.05 cm/s)	3.75 ips (9.525 cm/s)
±2 dB:	60 Hz ... 12 kHz	30 Hz ... 12 kHz	30 Hz ... 8 kHz	---------- ----------

- Amplifier programmed for "wide band":

	30 ips (76.2 cm/s)	15 ips (38.1 cm/s)	7.5 ips (19.05 cm/s)	3.75 ips (9.525 cm/s)
±2 dB:	60 Hz ... 20 kHz	30 Hz ... 18 kHz	30 Hz ... 12 kHz	---------- ----------

Signal-to-noise ratios:

CCIR {Equalization according to CCIR (AES at 30 ips), measured with tape AGFA PER 528, BASF LGR 50, or aequivalent type}

	30 ips (76.2cm/s)	15 ips (38.1cm/s)	7.5 ips (19.05cm/s)	3.75 ips (9.525cm/s)
Full track (320 nWb/m) track width 6.3 mm (1/4")				
- Linear, RMS, 30 Hz - 20 kHz	63 dB	61 dB	61 dB	57 dB
- Quasi-peak, weighted according to CCIR 468-1 (DIN 45405)	54 dB	52.5 dB	51 dB	50 dB
- RMS value, A weighted according to DIN 45633 as per IEC Publ. 179	68 dB	67 dB	65 dB	62 dB
Stereo (510 nWb/m) track width 2.75 mm				
- Linear, RMS, 30 Hz - 20 kHz	65 dB	63 dB	62 dB	57 dB
- Quasi-peak, weighted according to CCIR 468-1 (DIN 45405)	55.5 dB	54 dB	52.5 dB	51 dB
- RMS value, A weighted according to DIN 45633 as per IEC Publ. 179	69 dB	67 dB	65 dB	62 dB

Two-track (510 nWb/m) track width 2.0 mm	30 ips (76.2cm/s)	15 ips (38.1cm/s)	7.5 ips (19.05cm/s)	3.75 ips (9.525cm/s)
- Linear, RMS, 30 Hz - 20 kHz	63 dB	61 dB	61 dB	56 dB
- Quasi-peak, weighted according to CCIR 468-1 (DIN 45405)	54 dB	52.5 dB	51 dB	50 dB
- RMS value, A weighted according to DIN 45633 as per IEC Publ. 179	68 dB	66 dB	64 dB	61 dB

NAB {Equalization according to NAB (AES at 30 ips), measured with tape SCOTCH 3M 226 or aequivalent type}

	30 ips (76.2cm/s)	15 ips (38.1cm/s)	7.5 ips (19.05cm/s)	3.75 ips (9.525cm/s) (referred to 510 nWb/m)
Full track (1040 nWb/m) track width 6.3 mm (1/4")				
- Linear	74 dB	72 dB	74 dB	61 dB
- RMS, weighted according to ASA-A	78 dB	74 dB	76 dB	66 dB
Stereo (1040 nWb/m) track width 2.75 mm				
- Linear	71 dB	68 dB	70 dB	57 dB
- RMS, weighted according to ASA-A	75 dB	71 dB	73 dB	62 dB
Two-track (1040 nWb/m) track width 2.0 mm				
- Linear	70 dB	67 dB	69 dB	56 dB
- RMS, weighted according to ASA-A	74 dB	70 dB	72 dB	61 dB

Signal-to-noise ratios: (record-SYNC reproduction)
(Amplifier programmed to "narrow band")

NAB {Equalization according to NAB (AES at 30 ips), measured with tape SCOTCH 3M 226 or aequivalent type}

	30 ips (76.2cm/s)	15 ips (38.1cm/s)	7.5 ips (19.05cm/s)	3.75 ips (9.525cm/s)
Full track (1040 nWb/m) track width 6.3 mm (1/4")				
- Linear	69 dB	69 dB	69 dB	-----
- RMS, weighted according to ASA-A	75 dB	72 dB	72 dB	-----
Stereo (1040 nWb/m) track width 2.75 mm				
- Linear	66 dB	66 dB	66 dB	-----
- RMS, weighted according to ASA-A	72 dB	69 dB	69 dB	-----
Two-track (1040 nWb/m) track width 2.0 mm				
- Linear	65 dB	65 dB	65 dB	-----
- RMS, weighted according to ASA-A	71 dB	68 dB	68 dB	-----

Distortion: (Record-reproduce, 1 kHz, measured with tape AGFA PER 528)

CCIR:	30 ips (76.2cm/s)	15 ips (38.1cm/s)	7.5 ips (19.05cm/s)	3.75 ips (9.525cm/s)
Full track (320 nWb/m):	≤ 2.0%	≤ 1.5%	≤ 1.0%	≤ 1.0%
Stereo/2-track (510 nWb/m):	≤ 2.0%	≤ 1.5%	≤ 1.0%	≤ 1.0%

(Record-reproduce, 1 kHz, measured with tape SCOTCH 3M 226)

NAB:	30 ips (76.2cm/s) 400 nWb/m	15 ips (38.1cm/s) 510 nWb/m	7.5 ips (19.05cm/s) 510 nWb/m	3.75 ips (9.525cm/s) 510 nWb/m
Full track:	≤ 0.5%	≤ 0.5%	≤ 0.5%	≤ 0.5%
Stereo/2-track:	≤ 0.5%	≤ 0.5%	≤ 0.5%	≤ 0.5%

Cross-talk attenuation: (at 1 kHz, according to DIN 45521)

Stereo recorders: ≥ 55 dB
Two track recorders: ≥ 65 dB

Erase efficiency: (at 1 kHz and 510 nWb/m, 15 ips)

Stereo recorders with full-track erase head: ≥ 80 dB
Two-track recorders with overlapping erase head: ≥ 75 dB

Erase and bias frequency:

153.6 kHz for all tape speeds

VU-meter:

Switchable between VU indication (according to IEC recommendation 268, Part 10, Section 4) and PPM (peak programme meter) (according to IEC recommendation 268, Part 10, Section 3, except for 24,1, scale division).

Power supply (line voltage selector):

100 V, 120 V, 140 V, 200 V, 220 V, 240 V; ±10% ; 50 or 60 Hz

Power consumption:

Stop:	80 W
Recording on 2 channels:	160 W
Spooling:	190 W
Peak tape tension during spooling:	240 W

Disturbed operation: (transient line voltage failure)

Operating status unaffected by line voltage failures up to 100 ms.

Ambient temperatures:

50° F ... 104° F (+10° C ... +40° C)

Relative humidity:

20% ... 90%, non-condensing

Safety standard:

according to IEC recommendation, publication 65, degree of protection I (line filter, power switch, power fuse, power transformer and line voltage selector conform to type I and II).

Weight: (portable version)

Net: 30 kg ... 31 kg, depending on configuration
Gross: 34 kg ... 35 kg, depending on configuration (air freight)
52 kg ... 53 kg, depending on configuration (sea freight)

Technical data of the time code channel

The time code channel conforms to IEC publication 461, DIN 45511, Part 7.

Track width/location:

0.38 mm, center of tape

Code format:

SMPTE/EBU 80 bits address code (selectable 24 / 25 / 29.97 / 30 frames/second)

Tape speeds:

30 - 15 - 7.5 ips
(76.2 - 38.1 - 19.05 cm/s)

Magnetic flux of time code track:

CCIR: 729 nWb/m pp ±3 dB

Time code channel input:

Balanced and floating, with transformer
Input impedance ≥10 kΩ

Input level:

nom.: 500 mV pp
min.: 150 mV pp
max.: 4.0 V pp

Time code channel output:

Balanced and floating, with transformer
Output impedance ≤40 Ω

Output level:

2 V pp, Load impedance ≥ 200 Ω

Cross-talk attenuation code channel to audio:

≥ 90 dB for all components of the time code signal, relative to 510 nWb/m magnetic flux of sound track.

Coincidence error between code track and audio:
{with tape travel time compensation electronics (TIME CODE DELAY UNIT) enabled}

max. 4 ms at 15 ips

switchable tape travel time compensation for:
- coincident time code and audio channel recording and reproducing, resp., at 24 / 25 / 29.97 / 30 frames/second
- M15A-TC compatible time code and audio channel recording and reproducing, resp., at 24 / 25 / 29.97 / 30 frames/second

1.5.1 Dimensions

A810

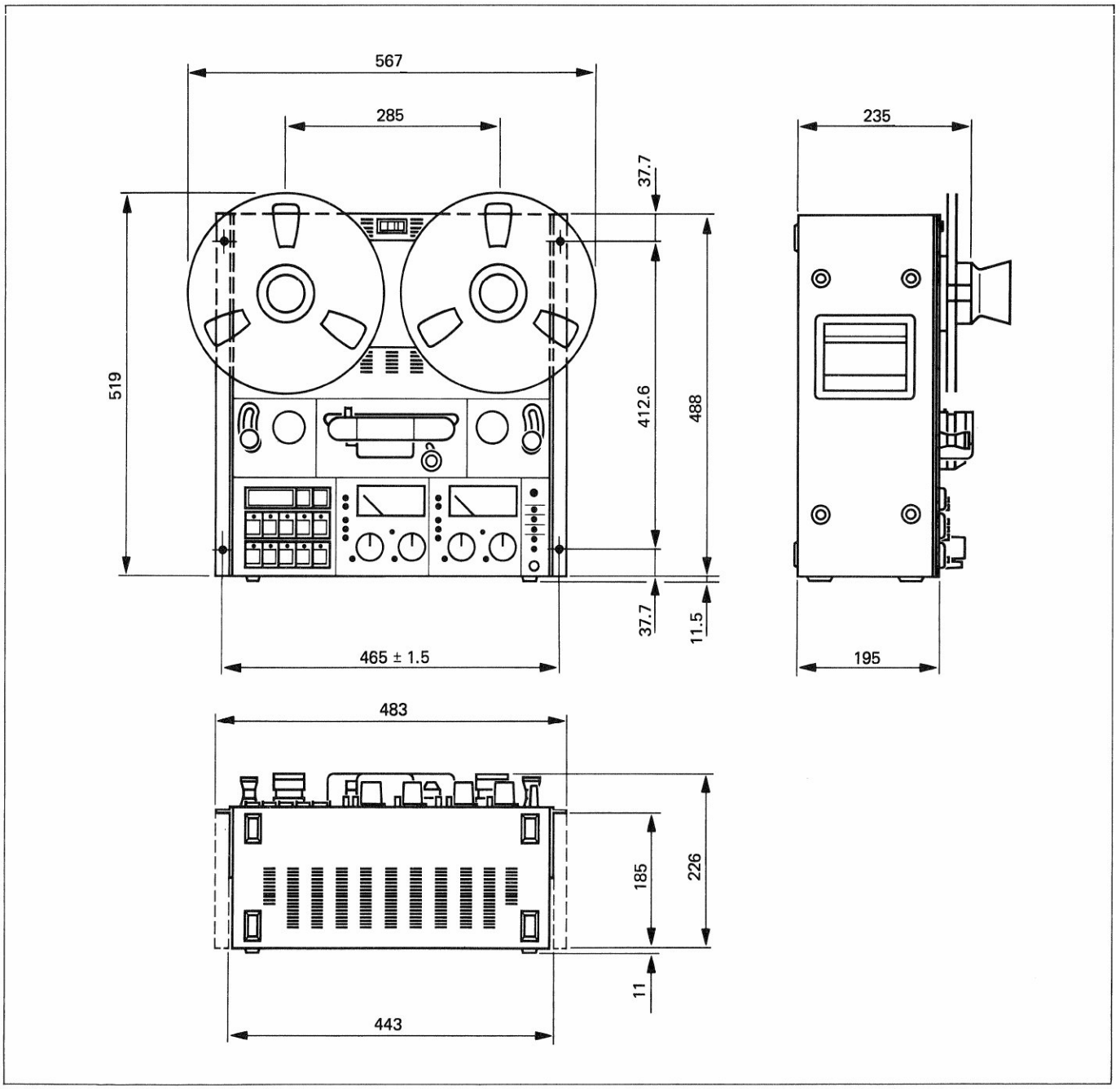

Console of A810

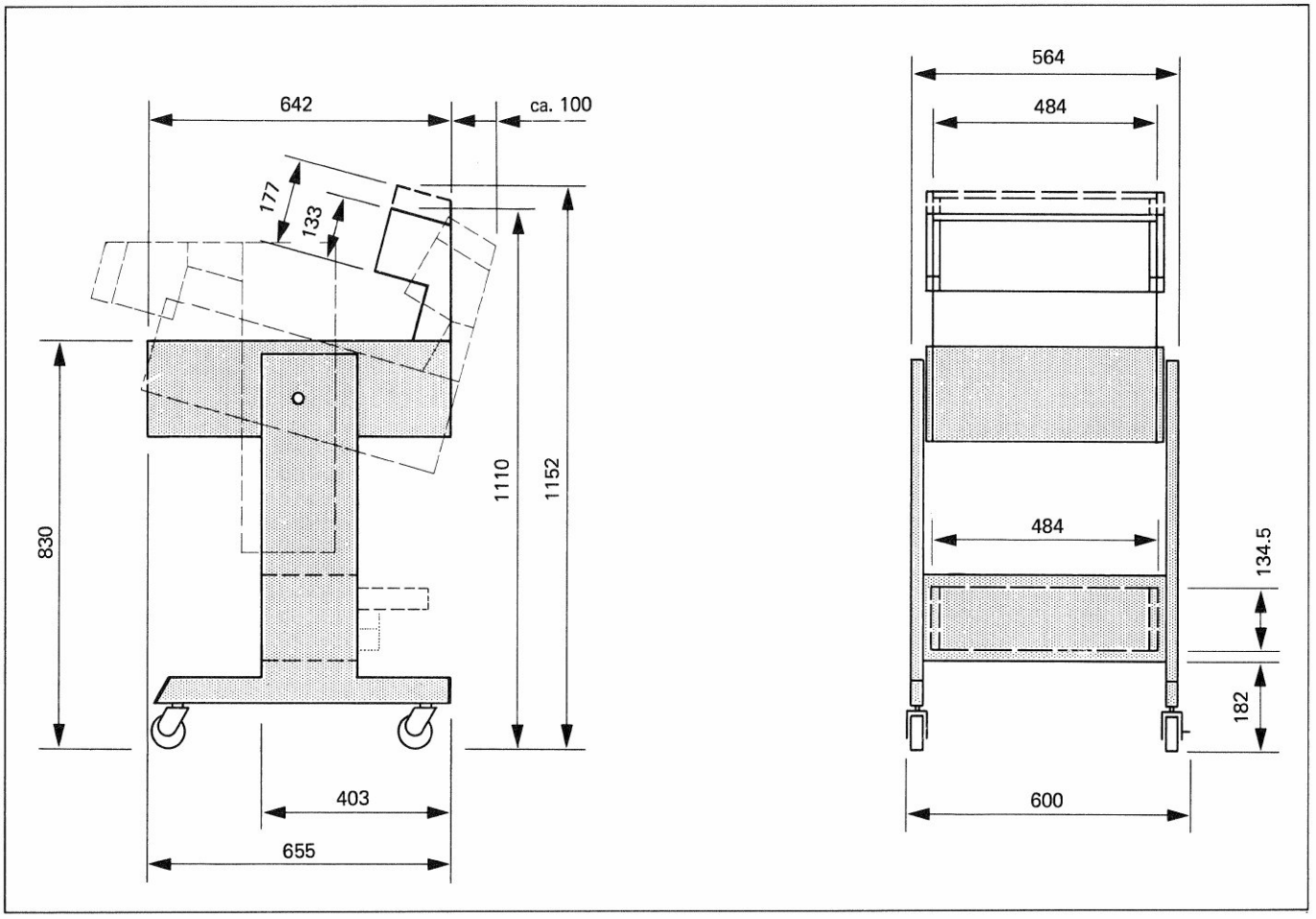

1.5.2 Packing

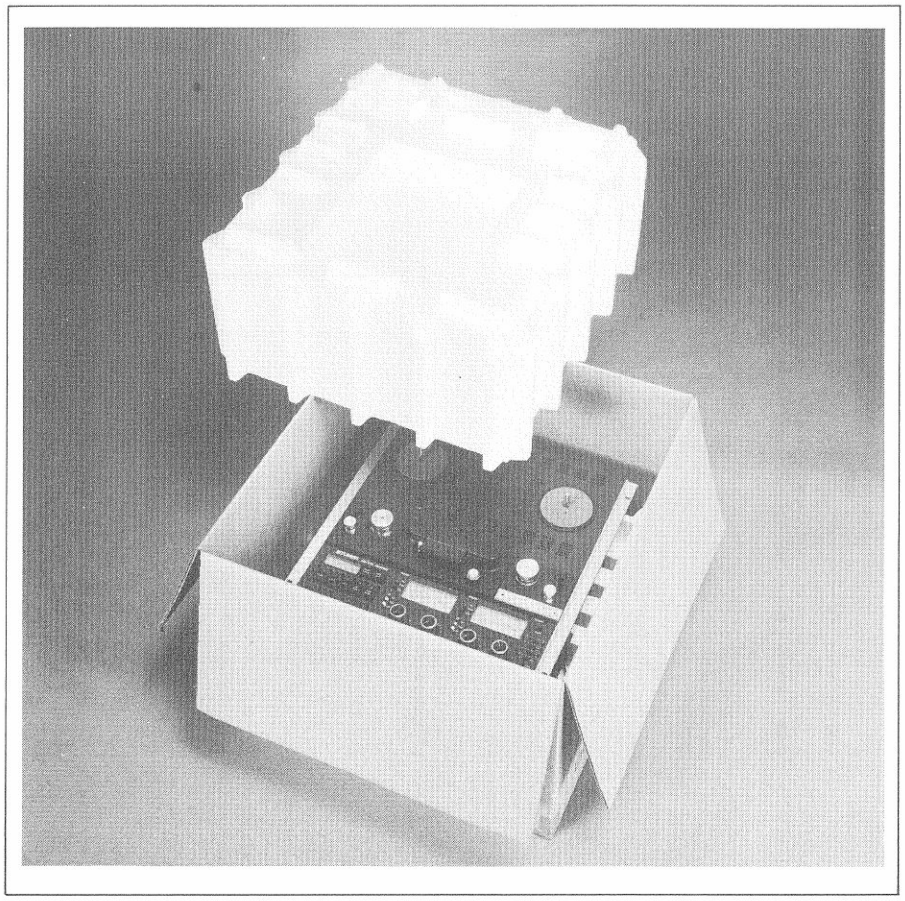

Air freight

A810, portable version:
Carton 64 x 62 x 46 cm
Gross weight, depending on configuration: 34 kg to 35 kg

A810, console version:
Carton 64 x 62 x 46 cm
Gross weight, depending on configuration: 34 kg to 35 kg
Console (and possibly VU-meter panel):
Carton 102 x 74 x 38 cm
Gross weight, depending on configuration: 39 kg to 46 kg

Ocean freight

A810, portable version:
Box 82 x 78 x 72 cm
Gross weight, depending on configuration: 52 kg to 53 kg

A810 console version:
Box 82 x 78 x 72 cm
Gross weight, depending on configuration: 52 kg to 53 kg
Console (and possibly VU-meter panel):
Box 110 x 82 x 46 cm
Gross weight, depending on configuration: 57 kg to 72 kg

1.5.3 Level diagrams

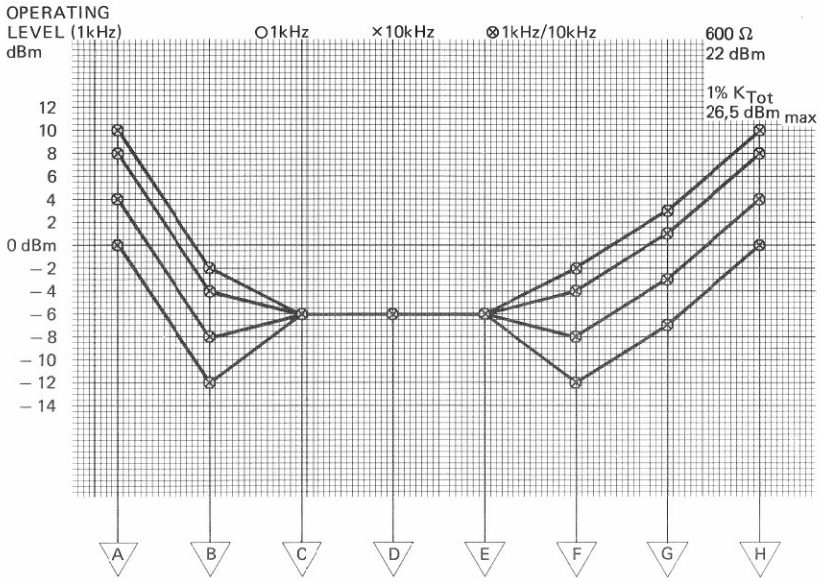

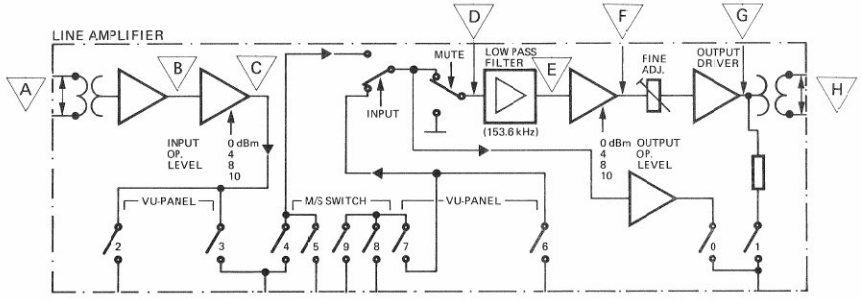

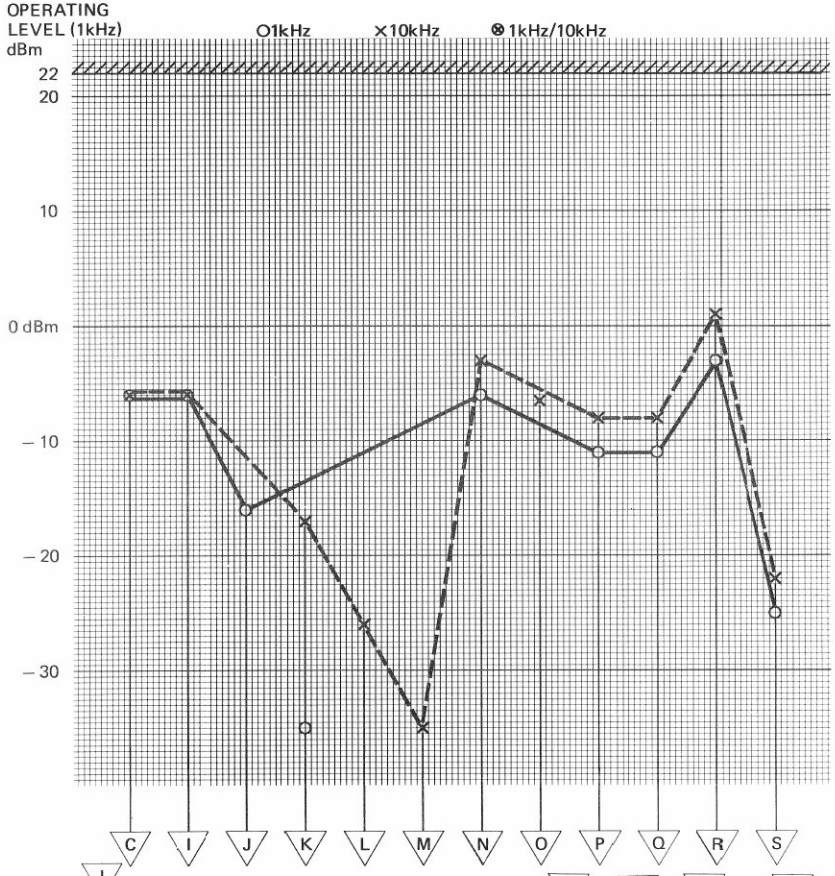

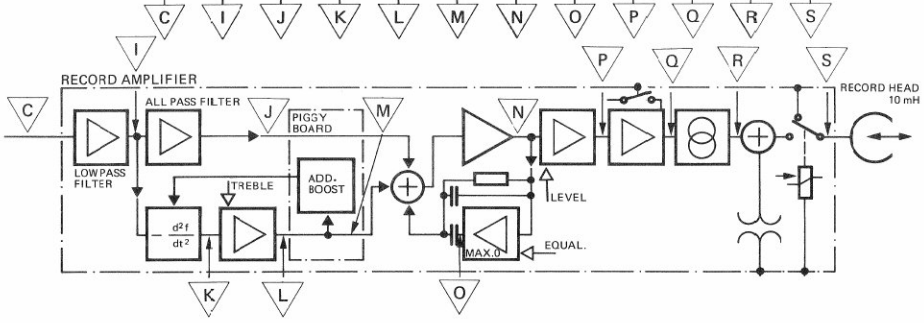

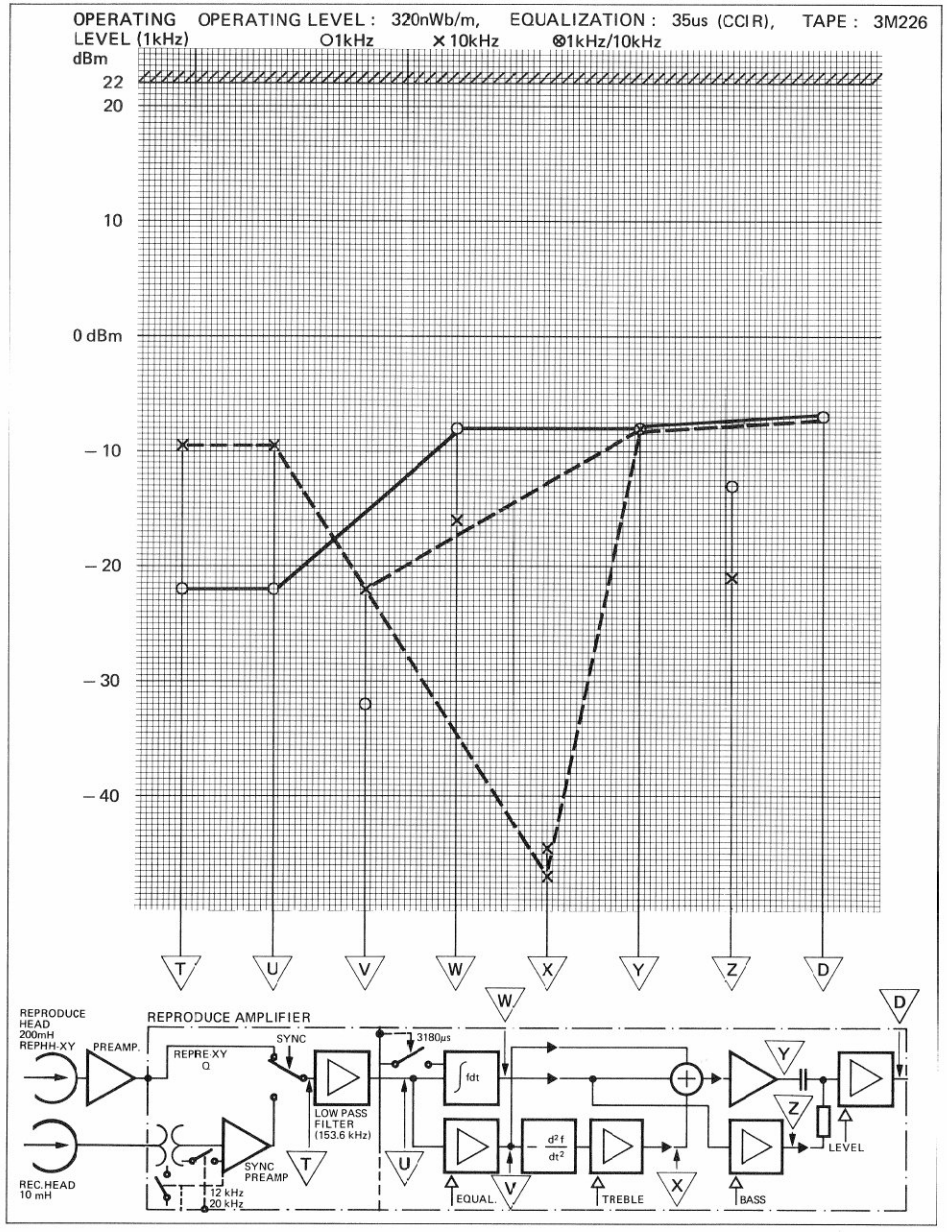

1.6 STANDARD CALIBRATION VALUES

The numbers in the following table represent hexadecimal values, i.e. they are in the same format as the numbers appearing on the tape timer display when the corresponding calibrations are performed. These values refer to 2mm - 2-channel recorders, reference level (operating level) 320 nWb/m (or 257 nWb/m at 3.75 ips), tape type 3M 226.

Speed	Mode	Equal.	Level	Treble	Bass	Equal.
3.75	REPRO		82	70	90	95
3.75	RECORD		26	B0	30	BB
3.75	SYNC		00	00	00	00
7.5	REPRO	CCIR	66	39	80	87
7.5	RECORD	CCIR	30	A0	3E	75
7.5	SYNC	CCIR	62	50	96	87
7.5	REPRO	NAB	66	39	80	61
7.5	RECORD	NAB	30	A0	3E	99
7.5	SYNC	NAB	62	50	96	61
15	REPRO	CCIR	66	30	6A	44
15	RECORD	CCIR	30	54	46	BA
15	SYNC	CCIR	62	50	88	44
15	REPRO	NAB	66	30	6A	61
15	RECORD	NAB	30	54	46	99
15	SYNC	NAB	62	50	88	61
30	REPRO		66	38	48	26
30	RECORD		30	1B	50	DE
30	SYNC		62	50	60	26
Speed	Mode	Equal.	Level	Treble	Bass	Equal.

A810 – Updated EQ Values

During the manufacturing period of the A810 tape recorder several software versions have been available. In addition the 1.318... series sound heads have been introduced after the production end. The different versions require the equalization (EQ) parameter settings according to the table below.

Tape Speed	EQ	Mode	SW up to 25/86	SW 01/88	SW 46/90, 25/91	Heads 1.318...
3.75 ips 9,5 cm/s	NAB/ CCIR	Repro	95	AB	AB	AE
		Record	BB	BB	BB	BB
		Sync	00	00	00	00
7.5 ips 19 cm/s	CCIR	Repro	87	87	87	82
		Record	75	75	75	A9
		Sync	87	87	87	85
	NAB	Repro	61	6D	6D	68
		Record	99	99	E0	BE
		Sync	61	61	61	70
15 ips 38 cm/s	CCIR	Repro	44	44	44	44
		Record	BA	BA	BA	C6
		Sync	44	44	44	44
	NAB	Repro	61	61	61	68
		Record	99	99	B1	A5
		Sync	61	61	61	68
30 ips 76 cm/s	NAB/ CCIR	Repro	26	26	26	29
		Record	DE	DE	DE	D5
		Sync	26	26	26	29

The values given here correspond to the (outdated) rightmost column of the table in chapter 1.6 of the A810 operating and service manual. *You may possibly want to insert this sheet after chapter 1.6 of your manual copy.*

For information on how to enter the parameters, please refer to the A810 operating and service manual.

1.7 MAINTENANCE HINTS FOR THE SERVICE PERSONNEL

1.7.1 Abbreviations

A	assembly
ANT	antenna
B	bulb
BA	battery, accumulator
BR	optocoupler (bulb --> LDR)
C	capacitor
D	diode, DIAC
DL	LED
DLQ	optocoupler (LED --> phototransistor)
DLR	optocoupler (LED --> LDR)
DLZ	LED array, 7 segment display
DP	photodiode
DZ	rectifier
E	electronic part
EF	headphones
F	fuse
FL	filter
H	head (sound-, erase-)
HC	hybrid circuit (thick/thin film)
HE	hall element
IC	integrated circuit
J	jack (female)
JS	jumper
K	relay, contactor
L	inductor
LS	loudspeaker
M	motor
ME	meter
MIC	microphone
MP	mechanial part
P	plug (male)
PU	pick up
Q	transistor, FET, thyristor, TRIAC
QP	phototransistor
QPZ	phototransistor array
R	resistor
RP	light depending resistor (LDR)
RT	temperature sensitive resistor
RZ	resistor array
S	switch
T	transformer
TL	delay line
TP	test point
W	wire, stranded wire
X	socket, holder
XB	lamp socket
XF	fuse holder
XIC	IC-socket
Y	quartz, piezoelectric element
Z	network, array

These abbreviations may be combined (max. 3 characters).

1.7.2 Powers of ten

Name	Abbreviation	Value
Tera-	T	10**12
Giga-	G	10**9
Mega-	M	10**6
Kilo-	k	10**3
Milli-	m	10**-3
Mikro-	µ	10**-6
Nano-	n (mµ#)	10**-9
Pico-	p (µµ#)	10**-12
Femto-	f	10**-15

frequently used in the United States

1.7.3 Code letters and colors

Resistors

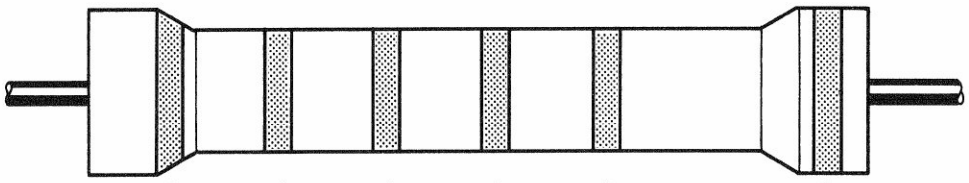

Standard series:

E6, E12, E24: 1.Digit 2.Digit Multiplier Tol. --- ---

E48: 1.Digit 2.Digit 3.Digit Multiplier Tol. TC

Color	Digit	Multiplier	Tolerance	Temp.-coefficient
gold	-	0,01	5 %	-
silver	-	0,1	10 %	-
black	0	1	-	-
brown	1	10	1 %	100 * 10 ** -6 / K
red	2	100	2 %	50 * 10 ** -6 / K ##
orange	3	1 k	-	15 * 10 ** -6 / K
yellow	4	10 k	-	25 * 10 ** -6 / K
green	5	100 k	0,5 %	-
blue	6	1 M	0,25 %	-
violet	7	10 M	0,1 %	-
grey	8	-	-	-
white	9	-	-	-

either no mark for temperature coefficient, or red

Capacitors

The tolerance category is sometimes specified by a letter after the rated capacitance.

D = 0,5 %
F = 1 %
G = 2 %
J = 5 %
K = 10 %
M = 20 %

Inductors, transformers

Molded RF coils

A wide silver-colored ring and 4 thin, differently colored rings identify molded RF coils. The wide silver ring indicates the start of the counting direction. The second, third, and fourth ring indicate the inductance in micro Henry (µH), where two of the three rings represent the numeric value, the third one either a multiplier or the decimal point. In the latter case it has a golden color. The fifth ring identifies the tolerance in percent (±).

Color	Digit	Multiplier	Tolerance
black	0	1	-
brown	1	10	1 %
red	2	100	2 %
orange	3	10**3	-
yellow	4	10**4	-
green	5	10**5	0,5 %
blue	6	10**6	-
violet	7	10**7	-
grey	8	10**8	-
white	9	10**9	-
gold	,	-	5 %
silver	-	-	10 %
any (nat).	-	-	20 %

Examples:

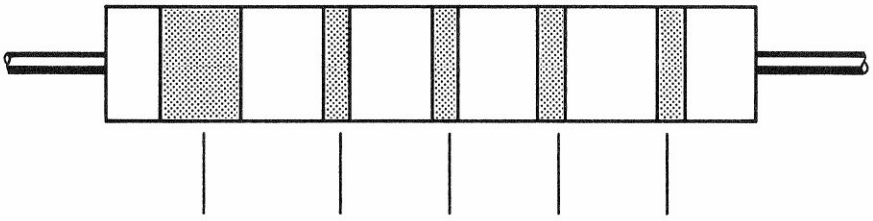

silver	gold*	brown	green	silver	= 0,15 µH 10%
silver	red	gold*	violet	---	= 2,7 µH 20%
silver	grey	red	brown**	gold	= 820 µH 5%

* Decimal point
** Multiplier

Inductors, transformers on ferrite cores

Inductors and transformers on ferrite cores are marked with three colored dots (for color codes, refer to the table in the section "Resistors", the two left-hand columns). These dots represent the last three digits of the STUDER standard number, the largest of them identifying the start. The first digits of the standard number (1.022.---) are always the same.

E.g.: Driver Transformer, 150 kHz.
Standard number: 1.022.211
Color code: red (large dot), brown, brown

Terminal 1 of the winding form is usually identified by a lobe; if not the winding form features a yellow dot near terminal No. 1.

1.7.4 Electrostatically sensitive semiconductor devices "ESE"

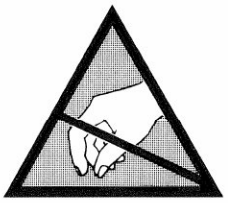

MOS (Metal oxide semiconductor) devices are very sensitive to electrostatic charges. The following precautions should, therefore, be observed:

1. Electrostatically sensitive semiconductor devices and assemblies ("ESE") are stored and shipped in protective packing material. This protective packing is identified with the label illustrated above.

2. Strictly avoid contact of the connector pins with plastic bags and foils or other statically chargeable materials.

3. Ensure that your wrist is grounded before touching the connector pins.

4. Use a grounded, conductive plastic pad as a work surface.

5. Never unplug or insert printed circuit boards while the equipment is under power! The equipment must have been switched off for at least 5 seconds before any PCBs are pulled out or inserted!

SECTION 2 INSTALLATION, PUTTING INTO OPERATION, QUICK-REFERENCE DESCRIPTION

		page
2.	INSTALLATION, PUTTING INTO OPERATION, QUICK-REFERENCE DESCRIPTION	2/1
2.1	UNPACKING AND TESTING	2/1
2.2	PLACE OF INSTALLATION	2/1
2.3	INSTALLING THE TAPE RECORDER	2/1
2.3.1	Portable versions	2/1
2.3.2	Installation into console	2/2
2.4	CONNECTOR PANEL	2/4
2.4.1	AC Power, voltage selector	2/4
2.4.2	Line input	2/5
2.4.3	Line output	2/5
2.4.4	Connectors for VU-meter panel	2/6
2.4.5	Remote control connectors	2/7
2.4.6	Headphones socket	2/9
2.5	OPERATING INSTRUCTIONS	2/10
2.5.1	Controls	2/10
2.5.2	Power switch	2/11
2.5.3	Tape timer display	2/11
2.5.4	Pilot lamps	2/11
2.5.5	Mounting the tape	2/12
2.5.6	Tape speeds	2/14
2.5.7	Play mode	2/14
2.5.8	Recording	2/14
2.5.9	Sync reproduction	2/15
2.5.10	Spooling mode	2/16
2.5.11	Stop mode	2/16
2.5.12	Autolocator	2/17
2.5.13	Dump editing	2/17
2.5.14	Monitor	2/18
2.5.15	Tape timer	2/18
2.5.16	VU-meter panel	2/18
2.5.17	Remote controls	2/19
2.5.18	Mono-Stereo switch (option)	2/19
2.5.19	Mono/stereo switch with test generator (option)	2/19
2.5.20	Time code channel (option)	2/20
2.5.21	Varispeed control (option)	2/20
2.6	EDITING, SPLICING	2/21
2.6.1	Procedure for searching a tape address	2/21
2.6.2	Cutting the tape	2/22
2.6.3	Splicing the tape	2/23
2.7	DEGRADED OPERATION	2/24
2.7.1	Error messages appearing on the tape timer display	2/24
2.8	OPERATION WITH SERIAL REMOTE CONTROLLER	2/26
2.8.1	Data protection	2/26
2.8.2	RS 232 interface	2/27
2.9	DAILY CARE	2/32

2. INSTALLATION, PUTTING INTO OPERATION, QUICK-REFERENCE DESCRIPTION

2.1 UNPACKING AND TESTING

The A810 tape recorder is shipped in special packing material that protects the unit from damage in transit. Unpack the recorder carefully to avoid marring the equipment surfaces.

Compare the content with the packing slip to ensure that the equipment is complete. Save the original packing material since it provides the best protection for your recorder for subsequent shipment.

Examine the complete content for possible transit damage. The forwarding company and the nearest STUDER dealer should be notified immediately in the event of damage.

2.2 PLACE OF INSTALLATION

The A810 tape recorder should preferably be installed in a dust-free location with adequate ambient ventilation. The technical specifications of the recorder are valid for an ambient air temperature range of 10 to 40°C. The relative humidity should be between 50% and 90% (noncondensing).

The recorder must not be placed in close proximity to strong electromagnetic fields. General sources of such interference are: strong load fluctuations on adjacent power lines, high-power transformers, elevator motors, as well as nearby radio and television transmitters.

Install the recorder in a location where there is sufficient clearance around it so that the cooling air can circulate freely. The minimum clearance at the ventilating louvers is 15 mm, at the lateral heatsinks 10 mm.

2.3 INSTALLING THE TAPE RECORDER

The equipment specificatitions are guaranteed for any operating position between vertical and horizontal.

2.3.1 Portable versions

After unpacking and visual inspection, the recorder can be installed in the desired place without further mechanical preparations.

2.3.2 Installation into console

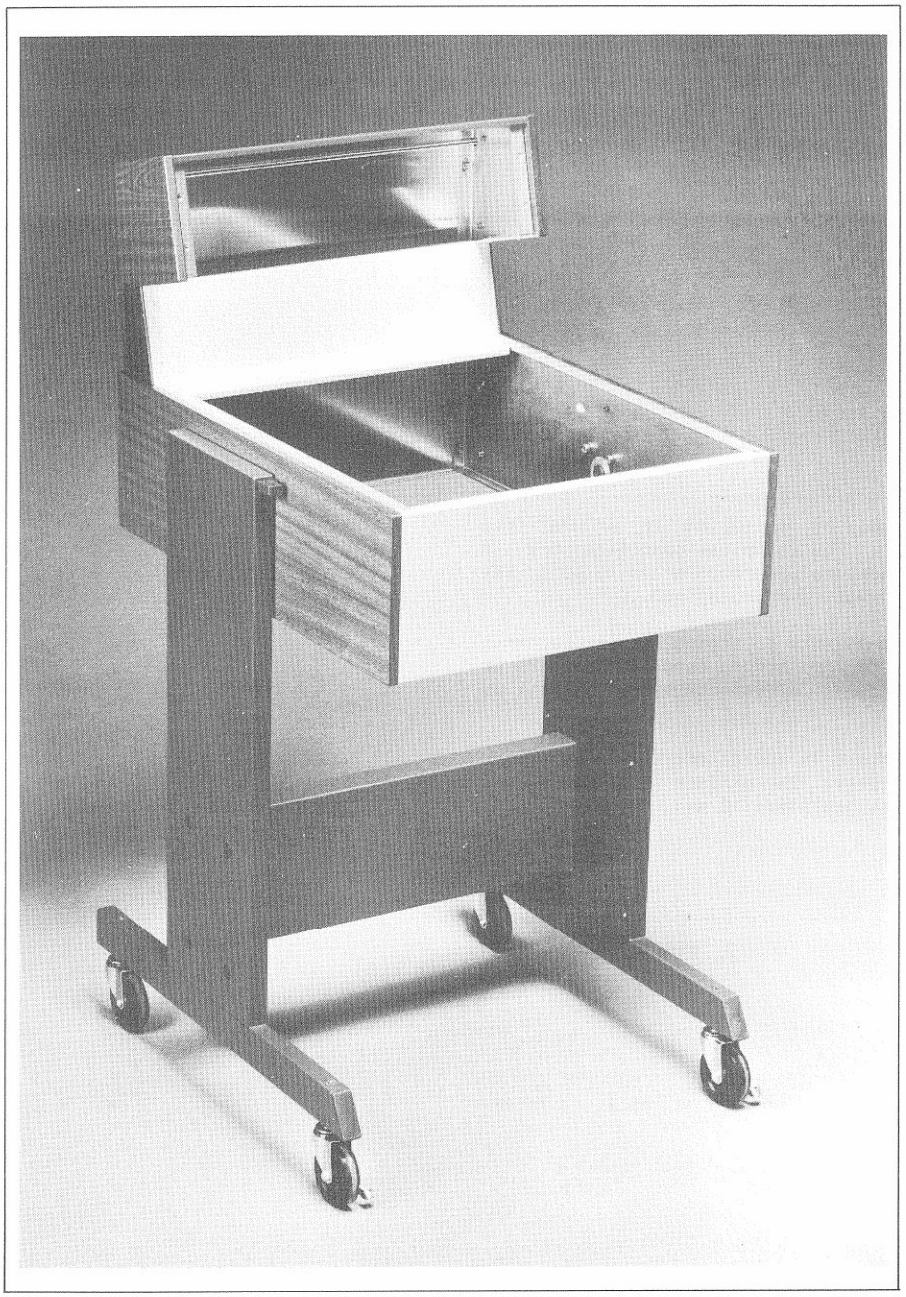

Procedure:

- Position console horizontally.
- Remove front panel of the console (4 screws M4, hexagon-socket-screw key 2.5 mm).
- Carefully slide recorder in from the front and secure with 4 slotted-head screws M6.
- Reinstall cover.

Consoles with penthouse:
- Guide cable harness and flat cable of the panel from the top through the penthouse.
- Secure panel with 4 slotted-head screws M6.
- Position console vertically (maintenance position). The connector panel of the tape recorder becomes accessible. Plug in cable harness and flat cable (two 25-pin connectors).

2.4 CONNECTOR PANEL

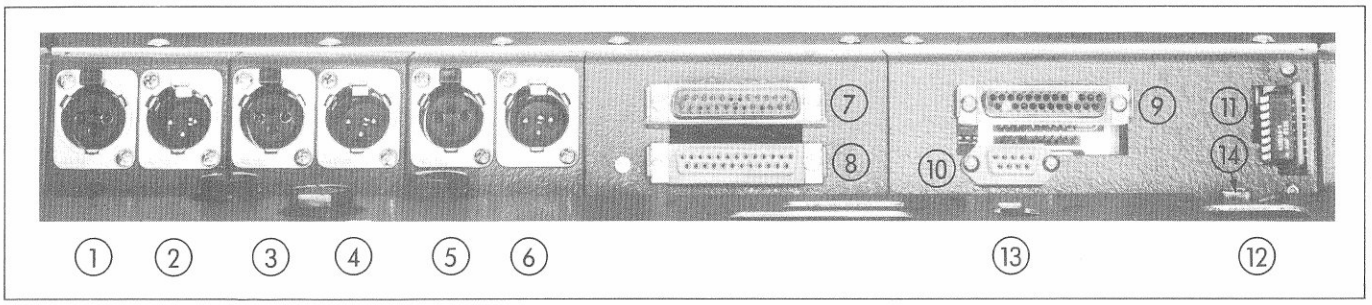

(1) Audio input CH1
(2) Audio output CH1
(3) Audio input CH2
(4) Audio output CH2
(5) Time code channel input
(6) Time code channel output
(7) Connector for VU panel (audio)
(8) Connector for VU panel
(9) Connector for parallel remote control
(10) Connector for serial remote control
(11) Address board
(12) AC power inlet
(13) Voltage selector
(14) Ground socket

2.4.1 AC Power, voltage selector

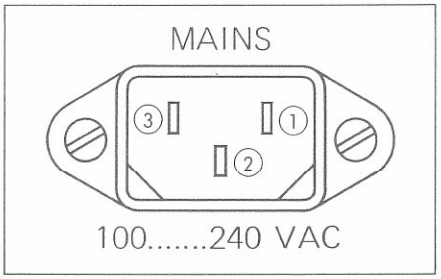

No. 1 Phase
No. 2 Ground
No. 3 Neutral

CAUTION
Before the recorder is connected for the first time, verify that the setting of the voltage selector on the rear panel of the recorder matches the local line voltage.

One of the following lines voltages can be selected:
100, 120, 140, 200, 220, 240 VAC

Remove the power fuse before changing the voltage selector setting. Check the rating of the fuse before you reinstall it:

100 ... 140 VAC: T 3.15 A SLOW
200 ... 240 VAC: T 1.6 A SLOW

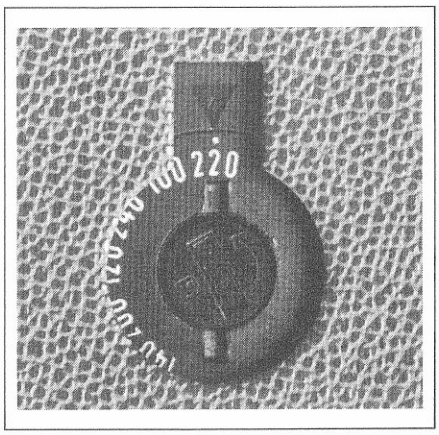

2.4.2 Line input

The balanced inputs are terminated on XLR-type sockets conforming to the IEC recommendation 268-14.

No. 1 Audio ground
No. 2 A-line (hot)
No. 3 B-line (cold)

(The A line is hot if the recorder is connected to an unbalanced source.)

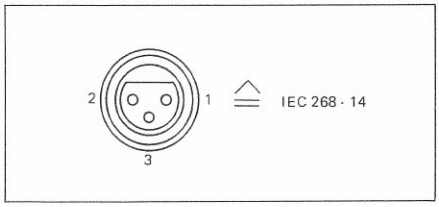

2.4.3 Line output

The balanced outputs are terminated on XLR-type jacks conforming to the IEC recommendation 268-14.

No. 1 Audio ground
No. 2 A-line (hot)
No. 3 B-line (cold)

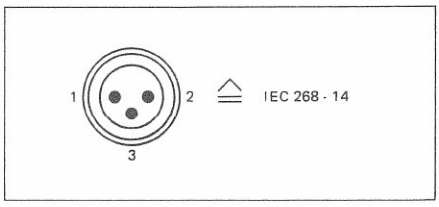

2.4.4 Connectors for VU-meter panel

Two 25-pin connectors (subminiature, type D) are used for connecting the external VU-meter panel.

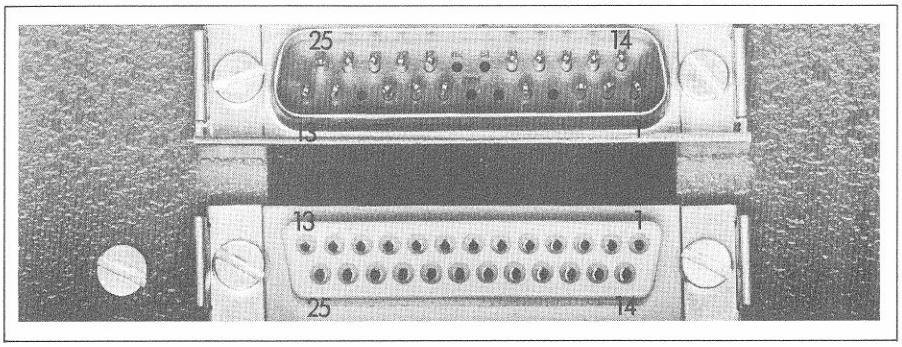

Signal names of connector GR 34 (audio, male):

01 TAPMS-01
02 + 0.0
03 INPAD-01
04 -
05 LOUFA-01
06 -
07 -
08 TAPMS-02
09 + 0.0
10 INPAD-02
11 -
12 LOUFA-02
13 GND
14 TAPAD-01
15 + 0.0
16 INPDI-01
17 + 0.0
18 LOUFB-01
19 -
20 -
21 TAPAD-02
22 + 0.0
23 INPDI-02
24 + 0.0
25 LOUFB-02

Signal names of connector GR 33 (digital, female):

01 + 0.0
02 + 5.6
03 + 15.0
04 T-SADA
05 T-SADC
06 T-WRTSL
07 T-DT-CH2
08 T-DT-MP
09 -
10 -
11 T-VARSPD
12 T-REFEXT
13 + 0.0
14 + 0.0
15 + 5.6
16 - 15.0
17 T-SADB
18 T-READSL
19 T-DT-CH1
20 T-DT-CH3
21 -
22 -
23 + 0.0
24 + 0.0
25 + 24.0

2.4.5 Remote control connectors

Socket for parallel remote control

A 25-pin connector (subminiature, type D) is used for connecting the parallel remote control which offers the following facilities:

- Remote control of the tape transport functions with feedback
- Storing and automatic searching of the address LOC 1
- Varispeed control
- Fader start control in reproduce mode
- Cancellation of the tape lift (only nonlocking push button)

Connector set (screw-type)	Part No. 20.020.303.06
Connector set (bayonet type)	Part No. 20.020.303.17
Conversion kit (from screw-type to bayonet type or vice versa, for one connector	Part No. 1.810.071.00

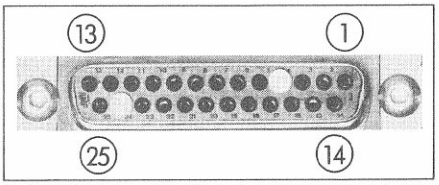

Signal names of parallel remote control connector GR 23 (female):

01 + 0.0
02 BR-REW
03 BR-FORW
04 KEY
05 SR-VRSPD
06 SR-TRANS
07 TO-CLK
08 BR-FAD
09 BR-REC
10 TO-DIR
11 FAD1
12 FAD2
13 T-REFEXT
14 + 0.0
15 BR-PLAY
16 BR-STOP
17 SR-LIFT
18 SR-LOC 1
19 SR-REC
20 SR-REW
21 SR-FORW
22 SR-PLAY
23 SR-STOP
24 KEY
25 + 24.0

Note:
If light bulbs are used as acknowledgement lamps, their inrush current should not exceed 0.3 A!

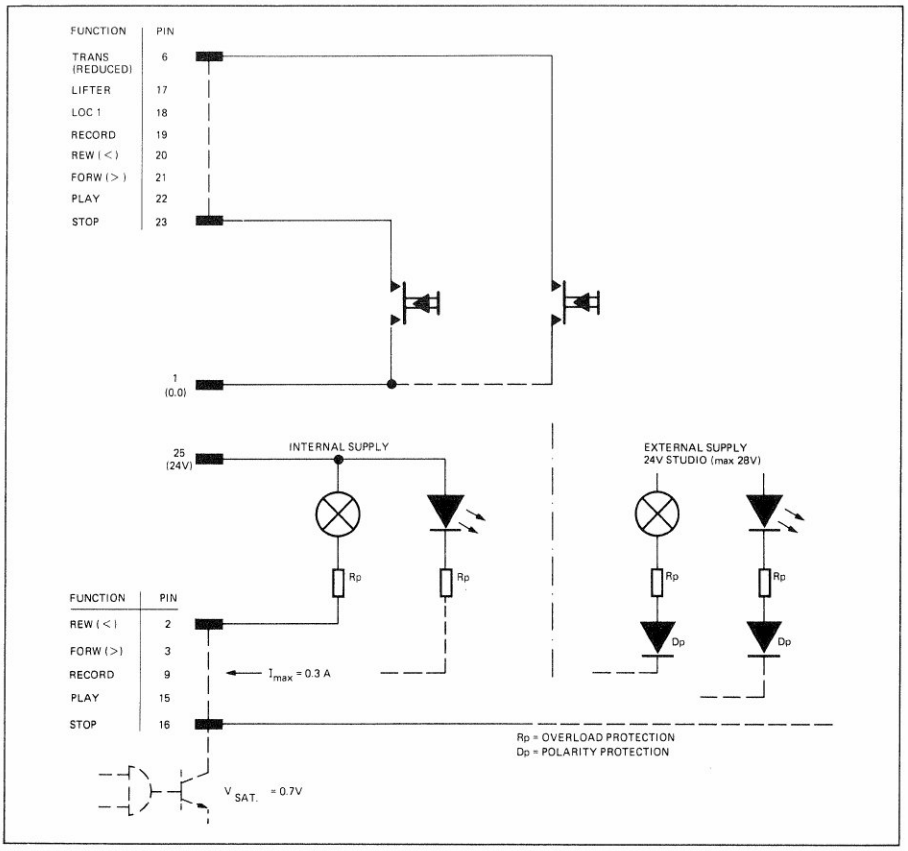

REMOTE CONTROL CIRCUIT

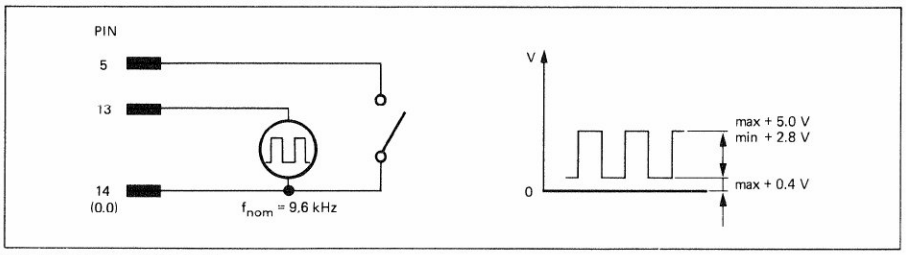

VARISPEED CONTROL

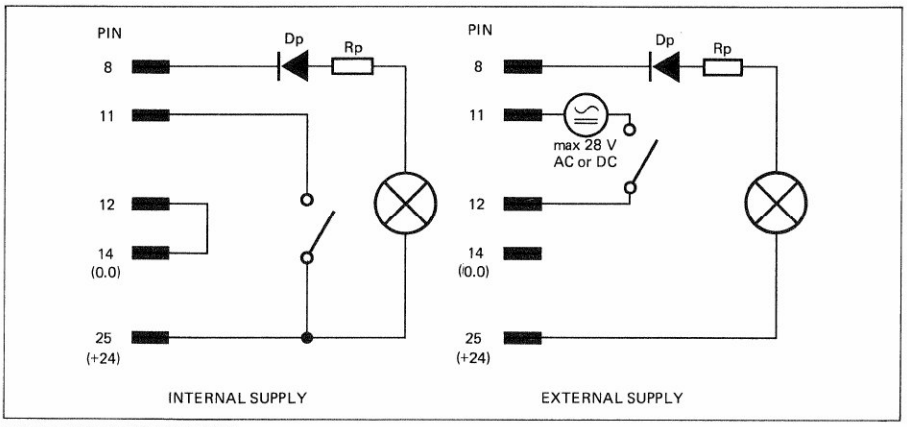

FADER START CIRCUIT

Socket for serial remote control

The serial remote control connector (9-pin, subminiature type D) can be used to connect a tape recorder for saving the stored audio parameters or a terminal equipped with an RS 232 interface. The signal assignment corresponds to the EIA recommendation 449.
For change-over refer to Section 4.2.9.

Connector set (screw-type) Part No. 20.020.303.07
Connector set (bayonet type) Part No. 20.020.303.09
Conversion kit (from screw-type to bayonet type or vice versa, for one connector Part No. 1.810.071.00

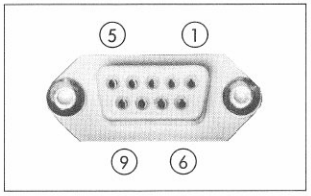

Signal names of serial remote control connector GR 22 (female):
01 SHIELD
02 SNDATA
03 RCCOMM
04 STUBUS1
05 N.C.
06 STUBUS2
07 SNCOMM
08 RCVDATA
09 GND

Pins for transferring the audio parameters:
1, 4, 6

Pins for RS 232 interface connection:
2, 3, 7, 8, 9

2.4.6 Headphones socket

TIP = left
RING = right
SLEEVE = Ground

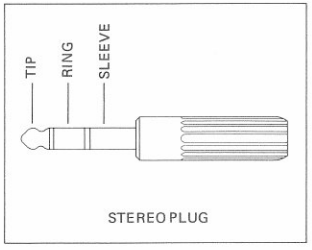

2.5 OPERATING INSTRUCTIONS

2.5.1 Controls

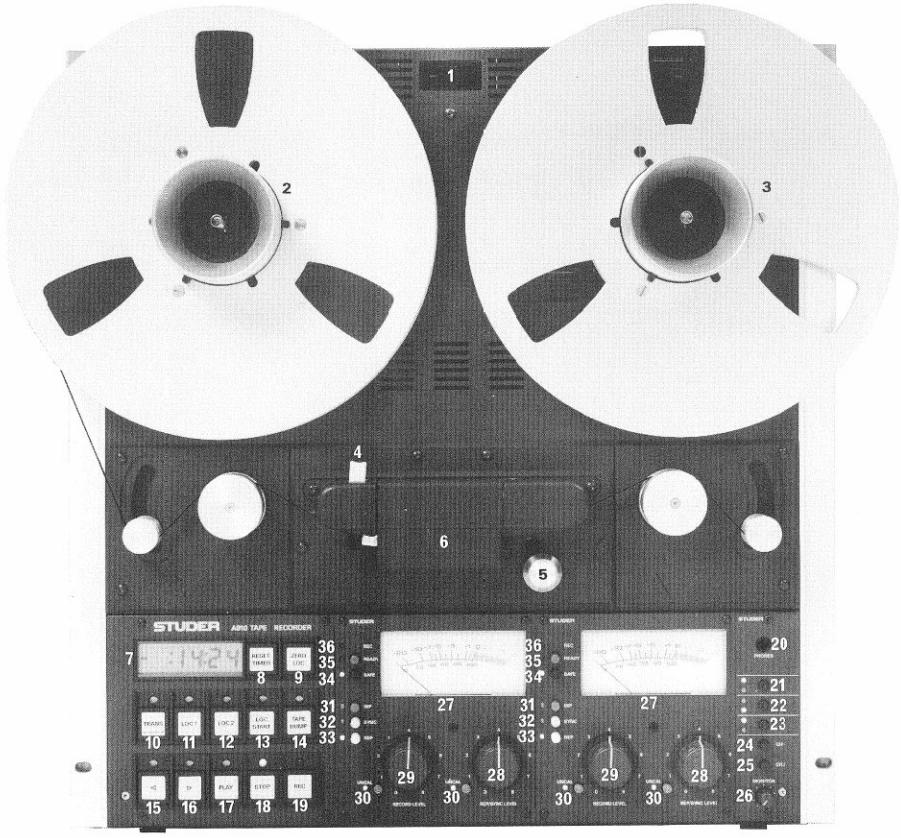

(1) Power switch ON/OFF
(2) Left-hand spindle (supply motor)
(3) Right-hand spindle /take-up motor)
(4) Tape lift slider
(5) Pressure roller: For easier editing can be manually shifted toward the capstan during spooling.
(6) Head shield, can be closed or opened manually.
(7) Tape timer display, 4 1/2 positions (LCD) or 5 positions (LED) with leading negative sign.
(8) RESET TIMER: Reset key for (7).
(9) ZERO LOCATOR: Initiates automatic search of tape address 00.00.
(10) TRANS <REDUCED>: multifunction key. Pressed together with LOC 1 ... LOC 4: the current tape address is stored; pressed together with one of the spooling keys during fast wind: reduces the spooling speed in three steps; pressed together with ZERO LOC: the operating hours (actual transport operation time) are displayed.
(11) LOC 1: automatic search of the address stored with (10). The locate address is displayed while this button is pressed.
(12) LOC 2: same as LOC 1
Or
LOC START: Automatic search of the tape address at which the play or the record function was last entered from STOP or spooling mode.
Or
LIFTER: Defeating the tape lift during spooling (internally programmable as a momentary or flip-flop push button).
Or
FADER: Change-over key for fader start. Disables local keyboard.
Or
TAPE DUMP: dump edit mode, right-hand spooling motor is switched off.
(13) LOC 3: same as LOC 1
Or
LOC START, LIFTER, FADER, TAPE DUMP
Or
REM CONTR: Selector switch for parallel remote control. Local keyboard is disabled.
(14) LOC 4: same as LOC 1
Or
LOC START, LIFTER, FADER, TAPE DUMP, REM CONTR
Or
CODE READY: recording on time code channel enabled.
(15) < Rewind key.
(16) > Fast forward key
4 spooling speeds: if TRANS <REDUCED> is pressed in conjunction with < or >, the recorder switches to the next lower spooling speed. When activated in STOP or PLAY mode: after pressing < or >, the recorder starts spooling at the lowest speed (1 m/s). Can be cancelled with TRANS, STOP or PLAY.
(17) PLAY: activates reproduce mode.
(18) STOP: has priority over all tape transport commands. Enables recorder for fader start. If STOP is pressed in conjunction with LOC START or LOC 1...4, the stored locator addresses are displayed.
(19) REC: record key; only effective together with PLAY. Drop-in (internally programmable): in play mode it is possible to switch directly to recording by pressing REC.
(20) PHONES: headphones socket (stereo). Volume not adjustable. Internal monitor muted.
(21) CCIR/NAB: selector switch for equalization at 7.5 or 15 ips.
(22) MONO/STEREO: selector switch for mono or stereo mode, or changeover to different tape type TAPE A / TAPE B
(23) 15 ips / 7.5 ips (or other combination): selector switch for tape speed; or rotary switch for three or four tape speeds (located above CCIR/NAB switch).
(24) CH 1: connects channel 1 to the monitor speaker.
(25) CH 2: connects channel 2 to the monitor speaker.
It is possible to connect both channels to the monitor speaker.
(26) MONITOR: volume control for monitor speaker.
(27) Output meter: VU or PPM indication, internally selectable.
(28) REPRO/SYNC LEVEL: level controller for reproduce or sync output signal.
(29) RECORD LEVEL: level controller for input signal (to be recorded).
(30) UNCAL: activates the level controller. In OFF position: calibrated line level.

Output selector switches:

(31) INP: Input signal
(32) SYNC: Sync signal
(33) REP: Reproduce signal

Track mode selector switches:

(34) SAFE: recording on channel disabled.
(35) READY: Recording on channel enabled.
(36) REC lamp: Record pilot lamp, lights up after PLAY and REC have been pressed.

2.5.2 Power switch

CAUTION!
Before switching on the recorder, check that the setting of the AC voltage selector on the back of the recorder matches the local line voltage.

If the setting of AC voltage selector is changed, also check the rating of the power fuse.

The power switch is located at the top edge of the tape transport cover. The recorder is switched on by shifting the switch handle to the right (–). To switch the recorder off, shift the switch handle to the left (O).

When power is switched on, the previously active operating state is activated and indicated.
Exceptions: The recorder is always switched to STOP mode. If it is equipped with a SAFE/READY switch always SAFE and REPRO are activated.
The microprocessor automatically performs a confidence test of the main functions when power is switched on.

2.5.3 Tape timer display

The tape timer display consists either of a 4 1/2 position liquid crystal display (LCD) or a 5 position LED display. It indicates the actual tape position in hours, minutes, and seconds independent of the selected tape speed. Numbers smaller than zero are identified by a negative sign.
Display range: -1 h 59 min 59 s to 1 h 59 min 59 s (LCD version)
- 59 min 59 s to 9 h 59 min 59 s (LED version)
Fractional seconds are rounded to the nearest second.

When power is switched on, some random numbers appear, followed by a date (calendar week and year). This is the release date of the microprocessor software (program). After five seconds the tape address is displayed which was active before the last power off.

On time code versions equipped with the LED tape timer display and with the new time code amplifier 1.820.721-81/82/83/84, the far right decimal point turns on when a code signal is available at the input or is being read from the tape (depending on the position of the INP/SYNC/REP selector switch).

Should a malfunction be detected in the recorder operation, this will be indicated by an alphabetic/numeric combination.

Examples of tape timer readings:

1:01:56 (LCD) or 1.01.56 (LED) indicates the last active tape address recorder ready.
:01:56 Upper display limit has been exceeded (LCD),
- :01:56 Lower display limit has been exceeded (LCD),
H.01.56 Upper display limit has been exceeded (LED),
L.01.56 Lower display limit has been exceeded (LED),recorder ready
0.35.56. In PLAY mode the last decimal point is on = time code on tape.
EE 01 (LCD) or EEE01 (LED): stored information has been lost. Refer to DEGRADED OPERATION, Section 2.7.

2.5.4 Pilot lamps

Any number of pilot lamps as well as READY or REC can briefly turn on after the microprocessor has been started. The recording function is electronically disabled during this sequence. The following pilot lamps (LEDs) turn on to indicate the current operating status of the tape recorder:

STOP: Stop function is active. If this LED flashes, both tape tension sensor are in their end positions (no tape present or threaded loosely).

CCIR or NAB: indicates the type of equalization selected.

STEREO or MONO
or on recorders without mono/stereo selector switch,
TAPE A or TAPE B: tape type selector.

Depending on the recorder configuration the following may also be illuminated:
- Tape speed: e.g. 15 or 7.5 ips
- Output meters
- On track selector: SAFE
- On output selector: selected output (INP, SYNC or REC)
- UNCAL (if selected).

2.5.5 Mounting the tape

Three-pronged reel with flange:
(DIN 45514, 45517)
Mount full reel on the left-hand spindle, the empty reel on the right-hand spindle. Pull out three-pronged guide and lock it with a 60° rotation.

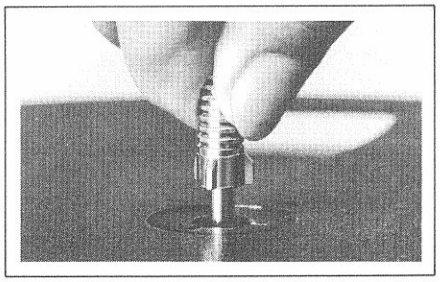

NAB reel:
Mount NAB adapters on spindles and lock three-pronged guides.
Mount NAB tape reel (or NAB hub if self-supporting pancake is used) on the adapter and rotate top section of adapter clockwise until it locks in place.

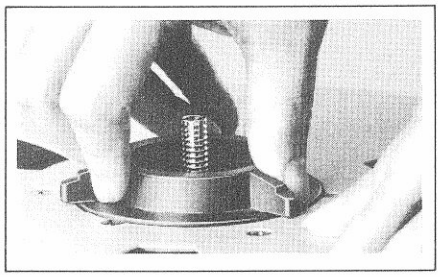

Self-supporting pancake:
(According to DIN 45515)
Set pancake platters on spindles, engage the two driving lugs of the platter into the holes of the spindle and lock three-pronged guide.

Mount full pancake on the left-hand side, lift flap and rotate it by 90° until it rests on the guide pins. Repeat preceding steps for mounting a pancake platter and an empty hub on the right-hand side.

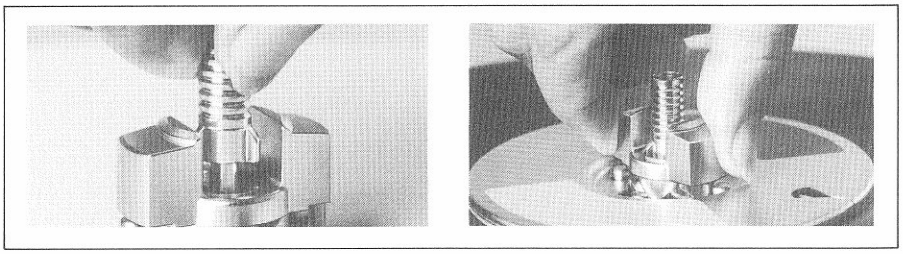

Threading the tape:

IMPORTANT:
The head shield must be lifted off the soundheads before threading the tape.

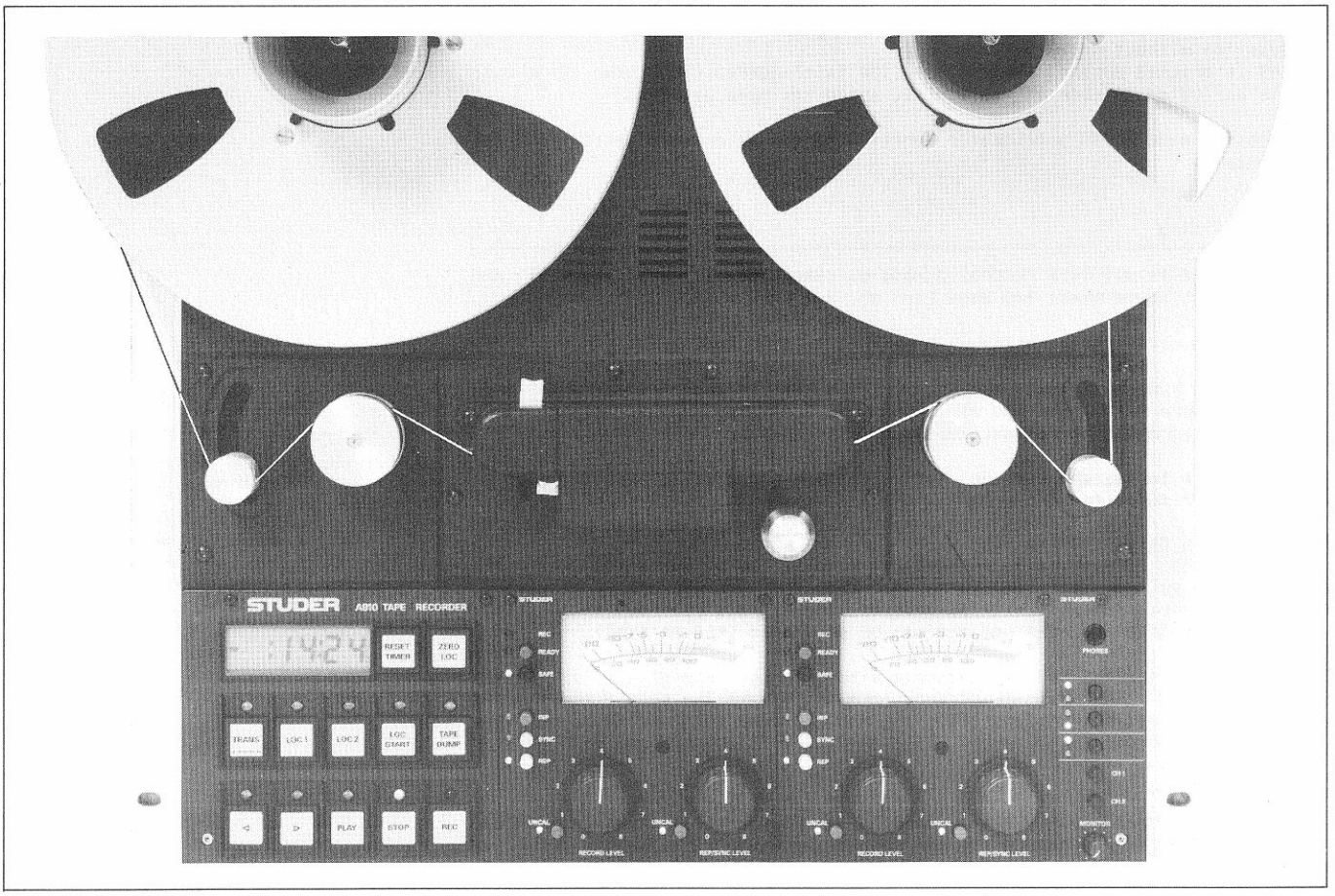

Thread tape according to illustration. The leading tape and is placed on the right-hand reel and secured with a few counterclockwise rotations. Tapes with a transparent leader should be wound forward to the start of the oxide coating. Set tape timer to zero by pressing RESET TIMER.
Lower shield to cover soundheads.

2.5.6 Tape speeds

Three or four tape speeds are available in the following versions:

- Low-speed (LS) version (with 4-pole tacho motor):
  3.75 / 7.5 / and 15 ips

- Four-speed version (with 2-pole tacho motor):
  3.75 / 7.5 / 15 / and 30 ips

(The speed is selected on the rotary switch). The pilot lamp "PLL CAPSTAN" turns on as soon as the tacho motor has attained the nominal speed.

On older versions with two-speed panel, any two speeds (3.75 / 7.5 / 15 / 30 ips) can be selected by means of DIL switches. The speed is changed over by pressing the corresponding button.

2.5.7 Play mode

The recorder is switched to play mode either with the local PLAY key, a remote control key or a fader start device, and the lamp above the PLAY key turns on.

The play mode can be cancelled by pressing the STOP button.

If PLAY is pressed while a recording is in progress, the recorder switches to reproduction without delay.
If PLAY is pressed during spooling, a STOP is triggered (PLAY lamp turns on); PLAY is activated as soon as the nominal speed has been attained.

The spooling mode or an autolocator function can be selected directly from the PLAY function.

2.5.8 Recording

The machine is put into recording mode by simultaneously pressing PLAY and REC. The lamps above these two keys turn on.

The record function is cancelled by pressing the STOP key.

If PLAY and REC are pressed during spooling, the recorder enters stop mode (the lamps above PLAY, REC and STOP turn on). Recording mode is automatically activated as soon as the nominal tape speed is reached.

It is possible to switch from the record function directly to spooling mode or an autolocator function.

<u>Recorders with SAFE/READY switch:</u>
Recording on corresponding channel can be disabled by pressing the SAFE button. The yellow SAFE lamp turns on. When PLAY and REC are subsequently pressed, the tape transport starts, however, the signals recorded on the track protected with SAFE are retained and can be monitored (REP or SYNC).

Recording on a channel is only possible after the corresponding READY button has been pressed. The green READY lamp turns on. When the record function is activated by pressing PLAY and REC, the red REC lamp turns on to signal that recording is in progress.

The SAFE function can be enabled for either channel while a recording is in progress. To reenable recording on this channel, the READY button must first be pressed. After the READY lamp turns on, either the PLAY and REC key or only REC key must be pressed, depending on the internal programming.

On 2-channel recorders, the internal programming determines whether this feature works on both channels in parallel or separately for each channel.

Drop-out from record mode:
Click-free changeover from the record function to playback or sync reproduction is possible by pressing the the PLAY key. Depending on the internal programming the erase and record head are switched off concurrently, or the record head switches off with a speed-dependent delay in such a way that the two soundheads drop out at exactly the same tape address. If the recording function is terminated with STOP, both soundheads are always switched off concurrently.

Drop-in:
Click-free change-over from reproduction to sync reproduction or recording is possible. Two methods can be implemented through internal programming: PLAY and REC must be pressed concurrently or the recording function is activated by REC alone (prerequisite: the machine is already in play mode!).
Depending on the internal programming, the erase head and the recording head are either switched off concurrently or the recording head switches off with a speed-dependent delay so that the drop-in occurs exactly at the same location.

Overlapping drop-in "FADE IN/FADE OUT" (mechanical):
If e.g. an applaus is to be faded in at the end of a production, the tape can be lifted off the erase head with the tape lift slider (4). The machine is susequently started in record mode. When the slider is slowly released, the tape contacts the record head first, i.e. the new modulation is added to the existing signals (e.g. music selection). After the music selection has faded away, the tape lift slider is released completely so that the tape comes in contact with the erase head. Unwanted noise will be eliminated and only the applaus is recorded.

2.5.9 Sync reproduction

Sync reproduction mode is entered by pressing the SYNC button. In this mode, the tape induces an audio signal in the recording. This signal is amplified and equalized in the reproduce amplifier.
Accurate drop in is possible since there is no speed-dependent offset between the record and the reproduce head.

The bandwidth for sync reproduction is limited to approx. 12 kHz. For special mixdowns it is possible to extend the bandwidth to 20 kHz with the aid of a jumper (refer to Section 4.2.9). At frequencies above 12 kHz, strong cross talk from the audio channel to the sync reproduction channel must, however, be expected.

Sync preselection:
A channel that has been switched to recording mode cannot be switched to sync reproduction. If the SYNC button is pressed during a recording, the output of the corresponding channel is connected to the input (INP). This channel is automatically switched to sync reproduction when the recording mode is cancelled (PLAY, SAFE, STOP).

2.5.10 Spooling mode

Rewinding is activated by pressing the < key; fast forward by pressing the > key. The corresponding pilot lamp turns on.

The spooling function is cancelled by pressing the STOP key.

Direct change-over from rewind to fast forward and vice versa or from reproduction or recording to spooling is possible.

It is possible to switch from spooling mode directly to recording or reproduction. The pilot lamp of the selected function turns on, the tape is braked, and the new function is activated as soon as the tape travels at the nominal speed.

Decreasing the spooling speed:
The search for a specified tape address can be made easier by decreasing the spooling speed from 10 m/s (standard) to 7, 4, or 1 m/s.
This is accomplished by pressing TRANS <REDUCED>, followed by one of the spooling keys.
TRANS <REDUCED> is active as long as the corresponding pilot lamp is on.

Example:
In order to decrease the maximum spooling speed to 1 m/s, the keys are pressed in the following order: TRANS <REDUCED> and 3 times < or >.

The slowest spooling speed can be activated directly from STOP or PLAY: press TRANS <REDUCED> an the corresponding spooling key.

Spooling at full speed can be resumed by pressing TRANS (or STOP or PLAY).

Tape lift:
The tape is automatically lifted during spooling in order to minimize wear on the soundheads.

If the beginning or the end of a recording is to be searched, the pressure roller cover can be pressed manually against the capstan but the pressure roller cannot, however, touch the capstan. As a consequence, the tape lift pins are retracted, the tape is pushed against the heads and the modulation becomes audible.

The tape lift pins can be retracted electrically by pressing the LIFTER key (internally programmable as a momentary or flip-flop key).

2.5.11 Stop mode

The STOP key has top priority and cancels other operating modes such as reproduction, recording, spooling, and autolocator. After this key has been pressed, the STOP pilot lamp turns on and tape breaking is initiated.

When the tape has come to a stop, the breaking torque is automatically decreased and the tape tension sensor are locked. This makes it easier to shift the tape for editing purposes.

Any new operating mode entered during braking will be stored and immediately activated when the nominal speed has been attained.

The STOP key can also be pressed in conjunction with locator keys to read out the locator addresses.

2.5.12 Autolocator

The following modes are supported by the autolocator function:

- ZERO LOC: Zerolocator. This key initiates a rewind (or fast forward) to the tape address corresponding to the timer reading 00:00.
- LOC START (programmable): this key activates a fast rewind (or forward wind) to the tape address at which play or record was last activated from STOP.
- LOC 1 ... LOC 4 (programmable): Transferlocator. Up to four tape addresses can be stored and automatically searched in spooling mode by pressing one of these keys.

Programming:
Search desired tape address and press the TRANS key when the approximate position has been reached. The address can be stored as long as the TRANS pilot lamp is on.

As soon as the exact position has been found, press one of the keys LOC 1 ... LOC 4. The TRANS pilot lamps turns off to acknowledge that the address has been transferred into memory. The TRANS key must be pressed again before a new address can be stored.

The stored address can be read out:
Either by pressing the corresponding LOC key again after the search has been completed or by holding down the STOP key, followed by the corresponding LOC key.

Play Preselection
If the PLAY key is pressed while a locate function is in progress (ZERO LOC, LOC START, LOC 1 ... 4), the recorder switches automatically to reproduction after the corresponding tape address has been found. Recording mode (REC) cannot be preselected.

All locate addresses are retained in memory even after the recorder has been switched off.

CAUTION!
Since the stored tape address relate to the tape timer content, undesirable offset will occur if the RESET TIMER key is pressed unintentionally!

2.5.13 Dump editing

The right-hand spooling motor is switched off in dump edit mode and unusable tape segments can be played into the waste basket.
When the TAPE DUMP key (inernally programmable) is pressed, the recorder switches to reproduction but the take-up motor is switched off.

In TAPE DUMP mode the tape must be pulled gently to the right until the pinch roller presses the tape against the capstan.
The TAPE DUMP function can be cancelled by pressing one of the command keys (e.g. STOP) or by pressing TAPE DUMP a second time.

2.5.14 Monitor

The monitor speaker of portable or chassis versions is built into the tape transport cover.
The key CH 1 connects channel 1, CH 2 connects channel 2 to the monitor speaker. If both keys are pressed, channel 1 and channel 2 are mixed in the monitor amplifier. The monitor speaker always reproduces the signal from the selected output (INP/SYNC/REP).
The volume can be adjusted with the MONITOR control.
The monitor speaker of three- and four-speed panel versions is muted in fader start mode.

The monitor speaker of console models is built into the console panel. Reproduction or input can be activated with the REPRO/INPUT selector switch (the signal is tapped before the corresponding level controllers).
Channel 1 (CH 1), channel 1+2 (CH 1 + 2) or channel 2 (CH 2) can be monitored.
The volume is adjusted with the MONITOR control.
No automatic muting of the monitor speaker is possible in fader start mode.

2.5.15 Tape timer

The electronic tape timer always displays the real time in hours, minutes, and seconds, regardless of the selected nominal tape speed.
The display capacity is -1 h 59 min 59 s to 1 h 59 min 59 s (for the LCD version) or -59 min 59 s to 9 h 59 min 59 s (LED version).

Values outside the display capacity are indicated without the hours digit on the LCD version, e.g. :56:20 or - :03:10; an "H" appears on the LED version in place of the hours if the value is too high or an "L" if the value is too low for indication, e.g. H.56.20 or L.03.10.

Fractional seconds are rounded up or down.

The tape timer stops automatically when the end of the tape is reached, if the tape tears, or in dump edit mode (TAPE DUMP).

The timer can be reset to 00.00 by pressing the RESET TIMER key.

On time code versions equipped with the LED tape timer display and with the new time code amplifier 1.820.721-81/82/83/84, the far right decimal point turns on when a code signal is available at the input or is being read from the tape (depending on the position of the INP/SYNC/REP selector switch).

2.5.16 VU-meter panel

The level meter can be internally switched to function as a peak program meter (PPM) or a VU-meter.

UNCAL: When this button is pressed, the corresponding level control is activated and the pilot lamp turns on.

When the UNCAL button is released, the level control is bypassed and the input or the output level is set to line level.

Output selector:
INP: Connects the input signal of the recorder to the output and to the VU-meter.

SYNC: Connects the sync signal to the output and the VU-meter. This mode can be preselected for the record function.

REP: Connects the reproduce signal to the output and the VU-meter.

Source/tape monitoring can be conveniently activated during recording by pressing the INP and REP buttons.

The INP, SYNC, and REP buttons always cancel each other.

In 2-channel models, the operating procedure is determined by the internal programming, i.e. it affects either both channels together or each individual channel.

2.5.17 Remote controls

The tape recorder can be started remotely in play mode with the aid of the fader start circuit.
The following functions can be activated remotely from the parallel remote control: reproduction, recording, spooling, stop, LOC 1, and LIFTER (defeating the tape lift during spooling).

a) Operation with programmable keys FADER and/or REM CONTR:
When one of these keys is pressed, the corresponding pilot lamp turns on, the local keyboard is disabled.

If FADER or REM CONTR is pressed a second time, the local keys are reactivated and the pilot lamps turn off. The fader start switch and the remote control switch are disabled in this condition.

b) Operation without FADER and/or REM CONTR keys:
The fader start circuit is only enabled if the recorder is in STOP mode. The remote control keys and the local keys have equal priority.

2.5.18 Mono-Stereo switch (option)

Stereo models can be equipped with a mono/stereo switch. The last operating mode in effect will be automatically reestablished and indicated after the recorder is switched on.

The MONO/STEREO button is a flip-flop switch, i.e. it changes from mono to stereo or vice versa. This switch can be actuated in any operating mode.

If the mono/stereo module is not installed, the corresponding pilot lamps STEREO and MONO remain dark.

2.5.19 Mono/stereo switch with test generator (option)

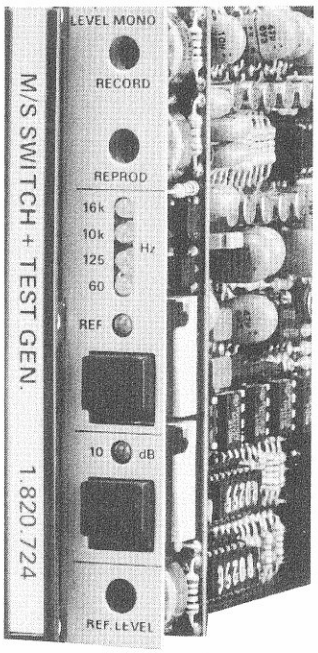

The test generator is switched on by pressing the upper button (REF pilot lamp turns on, i.e., the reference frequency, normally 1 kHz, is selected). The following switch settings can be established by repetitive pressing of this button:
- 60 Hz - 125 Hz - REF - 10 kHz - 16 kHz - OFF - 60 Hz - etc.

With the lower button the generator level can be switched over from nominal level to nominal level -10 dB. If -10 dB is selected, the gain in the reproduce branch of the mono/stereo switch is automatically boosted by 10 dB; this means that the reference value of the VU-meter display is again 0 dB for measurements with tape.
The lower button is only enabled if the test generator has previously been switched on with the upper button. After switching the generator off and on again with the upper button always nominal level is present at its output.

2.5.20 Time code channel (option)

On recorders with 2 mm guard track without built-in time code operating panel, the time code channel is always controlled (INP/SYNC/REP switch) in parallel with the two audio channels.

In 2-track versions without built-in time code operating unit, the time code channel (INP/SYNC/REP) is always controlled in parallel with audio channel 1. For exaple if sync reproduction is to be achieved for audio channel 2, audio channel 1 will have also to be switched to sync reproduction.

Time code recording
On recorders without built-in time code operating unit, press the (internally programmable) CODE READ key (pilot lamp turns on). Recording can subsequently be started by pressing PLAY and REC. If recording is already in progress, time code recording is activated by pressing CODE READY and REC + PLAY. (CODE READY pilot lamp flashes).

On recorders equipped with a time code operating unit, press the READY button (READY lamp turns on) and start the machine in record mode by pressing PLAY and REC. If recording is already in progress, press READY and REC + PLAY.

Time code reproduction
Press REP or SYNC and start recorder in reproduce mode with PLAY.

2.5.21 Varispeed control (option)

The varispeed control is activated either with the built-in VARISPEED button or the VARISPEED remote control key. With an external reference frequency of 9600 Hz, the tape speed corresponds to the selected nominal speed (3.75; 7.5; 15; or 30 ips). The tape speed can be varied by ±7 semitones by increasing or decreasing the external generator frequency (+50% / -33%).

The pilot lamp of the nominal frequency turns on as soon as the capstan motor is in synchronism with the external reference frequency.

The drop-in/drop-out sequence (refer to 2.5.8) is fixed and depends on the nominal speed which means that no matching is executed in varispeed mode!

2.6 EDITING, SPLICING

2.6.1 Procedure for searching a tape address

Easy and quick searching of a specified tape address were basic criteria in the design of the A810 tape recorder:

- Four spooling speeds are available for accurate and fast search of the desired tape address.
- For cueing in spooling mode, the automatic tape lift can be manual defeated by pressing the LIFTER key or by pressing against the cover of the pressure roller.
- Unusable tape segments can be played ito the waste basket in PLAY mode (programmable TAPE DUMP key).
- The autolocator function enables accurate search of the desired tape addresses at any tape speed.
- The tape tension sensors are locked in STOP mode and the braking torque is decreased: this makes it easier to shift the tape by hand and to cut it. The locking force of the sensors was selected so (500 p or 5 N) that the tape will not be damaged in the event of jerky movement.

Caution:
If the tape marker is used and for physical cutting of the tape, the recorder must be switched from sync reproduction to normal reproduction by pressing the REP buttons.

Searching a tape location with spooling:
If the desired tape position is approximately known (e.g. the beginning or the end of a program), it can be approached with the spooling function. The maximum tape speed can be reduced during spooling to 7, 4, or 1 m/s by pressing TRANS <REDUCED> and < or > (also refer to Section 2.5.10!).

Press LIFTER key or push pressure roller cover with your hand against the capstan so that the tape lift pins are retracted behind the soundheads and the modulation can be cued. Avoid contact with the rubber pinch roller!

As soon as the cue point is reached, the tape can be accurately positioned by repetitively pressing < and >. Press STOP and bring the tape into the exact cutting position by carefully rotating the two reel flanges by hand.

Search with PLAY:
If certain segments with unknown locations are to be cut out of a program, they can be searched with normal PLAY mode. When one of these segments has been located, press the STOP key and position the tape into the correct cutting position by carefully rotating the two reel flanges by hand.

If longer tape segments are to be eliminated, switch the recorder to dump edit mode (internally programmable) by pressing the TAPE DUMP key. The right-hand spooling motor will be switched off and the tape is played into the waste basket on the right-hand side.

The functions spooling, autolocator, remote control, and fader start are disabled while the dump edit mode is active (refer to Section 2.5.13).

Search with autolocator:
(Also refer to 2.5.12)
The tape address 00.00 can be automatically searched with the ZERO-LOC key.

The start of a program is automatically stored in memory and can be automatically searched with the internally programmable LOC START button, provided the recording was not interrupted.

While a program is being recorded, 1 to 4 tape addresses can be stored directly, depending on the internal programming, by pressing TRANS and LOC 1 (...4).

When the corresponding LOC button is pressed, the desired tape address is automatically searched; the exact editing position can now be adjusted by hand.

2.6.2 Cutting the tape

The following features have been provided, for easy cutting and splicing of the tape:

- A tape marker and scissors built into the headblock are available as options.
- Built-in splicing block with a cutting groove below the right-hand guide roller.
  The distance from the right-hand index finger stop of the head shield to the reproduce head is the same as the distance from the right-hand splicing block stop to the cutting groove.
- A tape loosely inserted after splicing will be automatically and correctly drawn in when the PLAY key or one of the spooling keys are pressed.

The tape can be cut once the correct splicing point has been established. This is accomplished by one of the procedures outlined below:

Cutting at the reproduce head
Lift the tape lightly off the reproduce head with antimagnetic scissors and cut it exactly at the gap (center of the head face) at an angle of 45°. A special cut-out is located to the right of the reproduce head so that the scissors can be inserted for lifting the tape.

Marking the tape
Mark the center of the reproduce head face on the tape with the aid of a marker (option) or a soft pencil. Now draw the tape away from the soundhead and cut it at an angle of 45°.

Splicing block with cutting groove

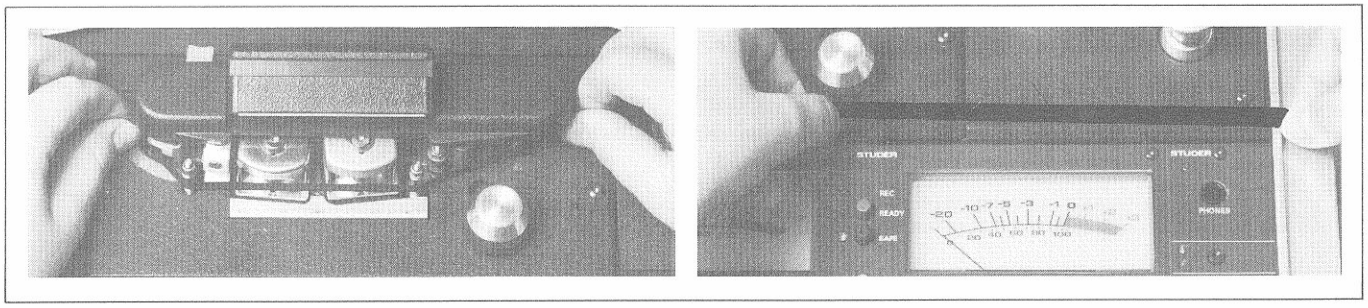

With thumb and index finger of each hand, pick up the tape on the right- and the left-hand side of the head shield and pull it out gently. Without letting the tape slip out of your hand, insert it into the splicing block in such a manner that the index finger of your right hand barely touches the edge of the block. The cutting position is now exactly over the cutting groove and the tape can be cut with a razor blade.

Built-in tape scissors (option)
Mark the cutting position of the tape with the marker or a soft pencil or memorize the location from the printing on the back. Carefully rotate the right-hand spindle (take-up direction) to advance the cutting position to the scissors. The tape is cut by pushing the scissors button.

2.6.3 Splicing the tape

The splicing block with the cutting goove is located below the right-hand guide roller.
The two tape segments are placed into the splicing block with the printed side facing up. Join the two ends (without overlapping) and secure them with a pice of splicing tape (approx. 3/4" (20 mm) long, 1/4" wide).

After the splicing operation the tape is reinserted and tensioned.

2.7 DEGRADED OPERATION

This Section describes the extent to which the A810 tape recorder can be operated in the event of a malfunction in one of the assemblies.

"Degraded operation" is not possible if
- One or serveral supply voltages are failing
- If the control for the spooling motors or the capstan motor is defective.

Important:
A defective tape recorder should only be operated in emergencies and be forwarded to an authorized service location as soon as possible.

Should one of the following error messages appear when the recorder is switched on (except EE 01, EE 02, and EE 03 on the LC display or EEE01, EEE02, and EEE03 on the LED display; refer to 2.7.1!), switch the recorder off, wait a few seconds, and switch it on again. If the error message disappears, normal operation can be resumed (the error may have been caused by fluctuations or transients in the line voltage during the initialization of the microprocessor).

Normal operation may also be restored by reinitializing the microprocessor by pressing the RESET key located below the lower front panel on the circuit board MP UNIT 1.810.752/1.820.780.

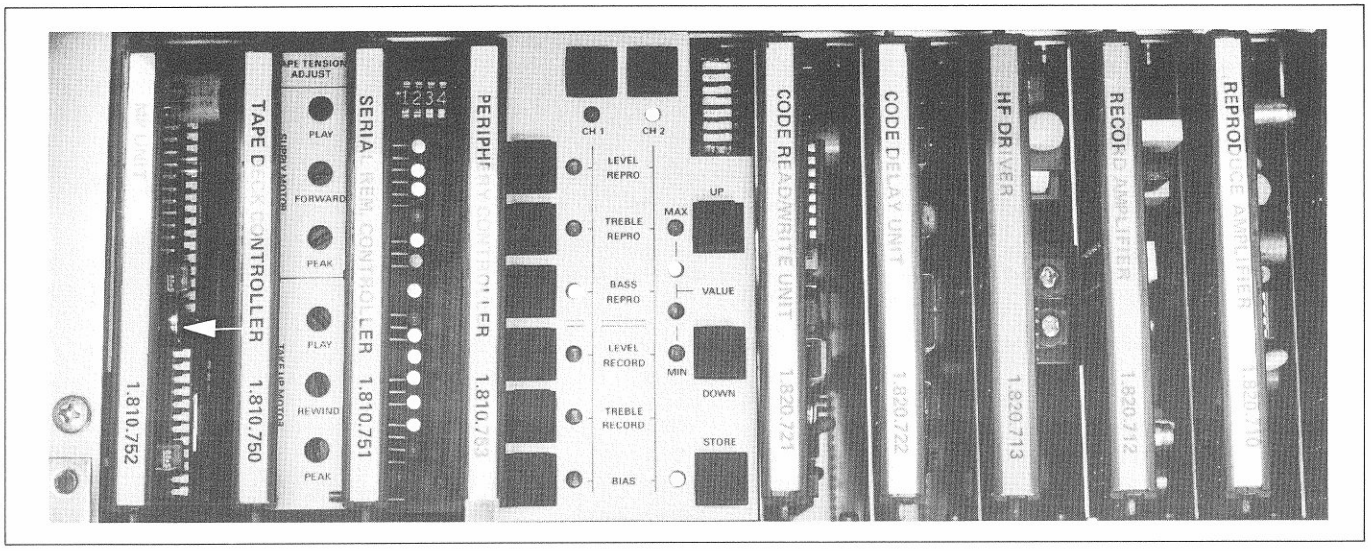

Error messages can be cleard by pressing TRANS <REDUCED> and STOP, however they may reappear after a certain time.

2.7.1 Error messages appearing on the tape timer display

EE 01 (LCD) or EEE01 (LED):
Data error in RAM; is only displayed when the recorder is switched on or after a RESET.
To keep the recorder operational, the standard audio parameters permanently stored in the machine program are loaded into the amplifiers.
Record and reproduce mode are still possible, however minor deviatins from the guaranteed technical data may occur because of the changed audio parameters.
A test recording should be made.
Also check the stored locate addresses.
The tape recorder must eventually be recalibrated or the audio parameters stored on tape must be reloaded. (Refer to Section 4.2.)

EE 02 (LCD) or EEE02 (LED):
Occurs only during calibration. Refer to 4.2.1.7.

EE 03 (LCD) or EEE03 (LED):
A data error has been detected during the cyclic testing of the RAM. Same effect and remedy as for EE 01!

Important:
The error messages EE(E)01, EE(E)02 and EE(E)03 are cleared after the recorder is switched OFF and ON or after RESET. It should be remembered, however, that the standard audio parameters will be loaded!

EE 04 (LCD) or EEE04 (LED):

EE 05 (LCD) or EEE05 (LED):
Failure of a supply voltage. No operation is possible. Check the secondary fuses and the supply voltages. Exception: failure of the 5.6 V supply.

EE 06 (LCD) or EEE06 (LED):
Error in the transmission of data when reading saved audio parameters from tape. Repeat the read operation (refer to 4.2.7).

EE 07 (LCD) or EEE07 (LED):
Error in the transmission of data when saving audio parameters on tape. Repeat save operation (refer to 4.2.7).

EE 08 (LCD) or EEE08 (LED):
Error in the comparison of the saved audio parameters with the data stored in RAM (refer to 4.2.7).

EE 13 (LCD) or EEE13 (LED):
External VU panel not plugged in or jumper on BUS CONNECTOR PCB set to "EXTERN" rather than "INTERN" (refer to Section 4.2.9.8).

EE 14 (LCD) or EEE14 (LED):
Master panel not plugged in (BUS CONNECTOR BOARD).

EE 15 (LCD) or EEE15 (LED):
Data transmission error (in conjunction with serial remote port).

EE C1 (LCD) or EEEC1 (LED):
Failure in audio channel 1. Recording on channel 1 is inhibited by the microprocessor. Reproduction of channel 1 or recording and reproduction on channel 2 are still possible.

EE C2 (LCD) or EEEC2 (LED):
Failure in audio channel 2. Recording on channel 2 is inhibited by the microprocessor. Reproduction of channel 2 as well as recording and reproduction on channel 1 are still possible.

EE C3 Time code channel defective.

EE Ei (LCD) or EEEEi (LED):
(i = 1, 2, 3, or 4) data error in one of the EPROMs 1, 2, 3, or 4. Further operation of the recorder is not possible if this error occurs during the power-on sequence of the recorder.
If the error occurs after the recorder has been switched on: mount a tape (with trivial content). Check functions such as play, record (also the SAFE function!) and spooling. Check braking action (loop formation!).
The recorder can be put into operation if no apparent problem is found, however the service agency should be notified as soon as possible.

OTHER MESSAGES OF THE TAPE TIMER DISPLAY

b0 b0 (LCD) or b0b0b (LED):
This value is displayed while the audio parameters are being read from tape.

bb bb (LCD) or bbbbb (LED):
Acknowledgment for correct reading of the audio parameters from tape. All data have been stored in RAM.

CO CO (LCD) or COCOC (LED):
This value is displayed while the audio parameters are being saved on tape.

CC CC (LCD) or CCCCC (LED):
Acknowledgment for correct copying of the audio parameters to tape. All audio data have been recorded thrice.

dO dO (LCD) or dOdOd (LED):
This value is displayed while the audio parameters stored on tape are being compared for verification purposes with the data stored in RAM.

dd dd (LCD) or ddddd (LED):
Acknowledgment that the audio parameters recorded on tape have been successfully compared with the data stored in RAM.

2.8 OPERATION WITH SERIAL REMOTE CONTROLLER

With the latest version of the serial remote controller (1.810.751), the recorder can be interfaced to a terminal (RS 232) and the audio parameters can be saved on tape.
Changeover between RS 232 and parameter saving is effected with the program switches on the address PCB.

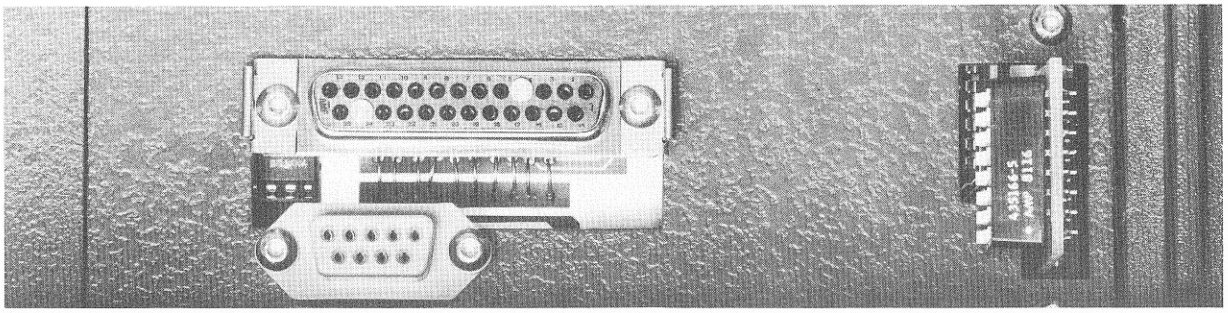

2.8.1 Data protection

The audio parameters stored in RAM can be copied to magnetic tape via the 9-pin connector for serial remote control, or new audio parameters can be loaded into the recorder (refer to Sections 4.2.7 and 4.2.8).

2.8.2 RS 232 interface

The term "RS 232" defines a link between a "terminal" and a "modem". The corresponding standards also define:

- electrical characteristics (level, lines),
- mechanical characteristics (connectors)
- signal descriptions and
- standard connections

The interface is capable of transmitting data at speeds up to 20 kbit/s and over cables with a length of up to 15 m.
The signal levels are defined as follows:

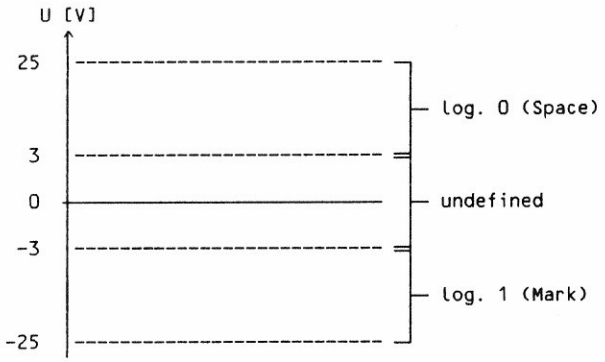

The 25-pin connector can accommodate various interface structures, however, the full pin assignment is rarely used today. Modern systems frequently use minimum structures for the terminal-modem and terminal-terminal connection respectively as illustrated in the next Figure.

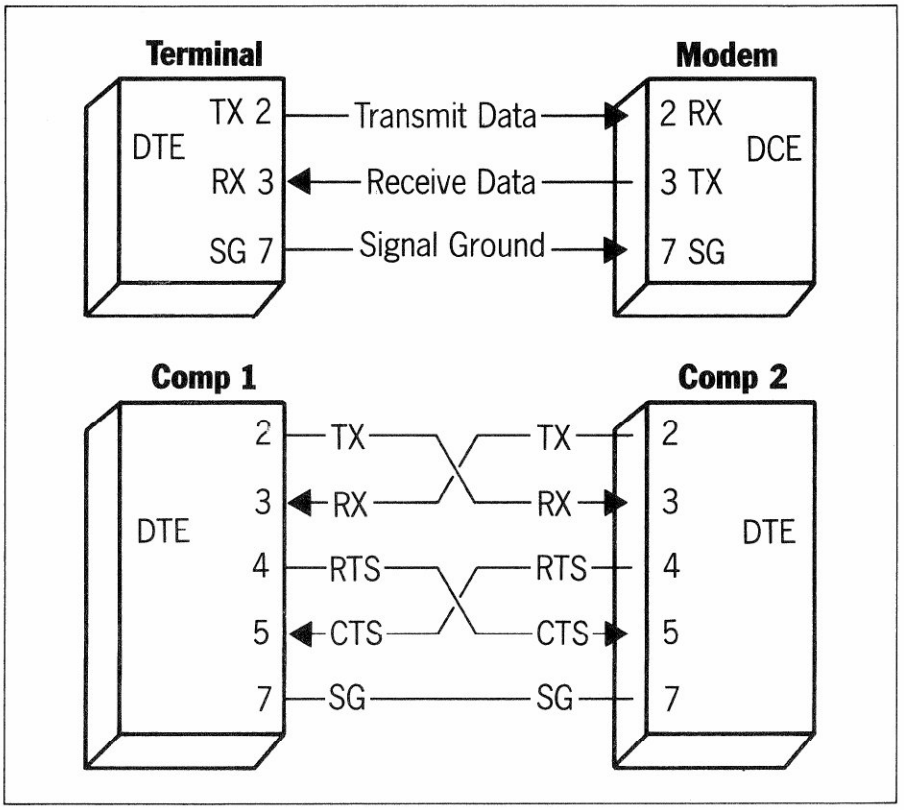

All extensions (e.g. baud rate, code, synchronous/asynchronous connection, number of start/stop bits, parity, hardware/software handshake) are defined by the corresponding manufacturer.

Serial remote controller of the A810

The serial interface (remote controller) of the A810 recorder uses a 9-pin connector according to SMPTE in place of the 25-pin connector. The user can thus decide by means of an adapter cable whether the unit is to function as a terminal or as a modem.

Recorder 9-pole		Terminal 25-pole		Modem 25-pole	
Signal	Pin No.	Signal	Pin No.	Signal	Pin No.
SNDATA	2	Trans. Data	2	Trans. Data	3
RCVDATA	8	Rec. Data	3	Rec. Data	2
GROUND	9	Sig. Ground	7	Sig. Ground	7

No additional handshake lines are used. A software handshake (X ON / X OFF protocol) is implemented for all baud rates, but only necessary for 9.6 kbaud.

X ON = 0001 0001 (ASCII DC 1) = continue

X OFF = 0001 0011 (ASCII DC 3) = stop

When the recorder receives an X OFF it can still transmit up to two characters. After the recorder itself has transmitted X OFF it can still receive 5 characters without losing a command.
The transmitted data string contains:
- 1 start bit
- 8 data bits
- 1 stop bit (no parity)

The following baud rates can be set: 300, 1200, or 9600.
Only data in ASCII character format will be accepted.

Putting the ASCII serial remote controller 1.810.751 into operation

Set up the computer or terminal as follows:

- 1 Start bit, 8 data bits, 1 stop bit (no parity bit), baud rate 300, 1200, or 9600. Echo mode yes or no. Set handshake lines CTS and RTS to low.

SERIAL REMOTE CONTROLLER 1.810.751:

- This PCB contains the receiver and driver for the Studer interface for audio parameter saving as well as the receiver and driver for the RS 232 interface. It is possible to select between these two functions by means of the jumper JS1 as follows:
  - Manual (position X)
    Changeover with DIL switch 2 of the switch assembly SZ 1,
    ON: Studer interface for data protection
    OFF: RS 232
    or
  - automatic (position H)
  Automatic changeover is not implemented in the software up to and including release 13/83 which means that the position X has to be used.
- Plug in the circuit board, switch on the LED monitor display with DIL switch 1: both LEDs RX and TX turn on.
- Set DIL switch 2 to the OFF position for changeover to RS 232.
- Connect the computer or terminal via the adapter cable to the 9-pin RS 232 sockets. If the link is in order, the RX and TX LED turn off.
- On the address board plugged into the rear of the recorder, program the same baud rate as used for the computer or terminal.

Addr. Board Switch	1	2	3	4	5	6	7	8
9600 Bd with echo	0	0	0	0	0	0	0	0
9600 Bd without echo	1	0	0	0	0	0	0	0
1200 Bd with echo	0	0	0	0	0	0	1	0
1200 Bd without echo	1	0	0	0	0	0	1	0
300 Bd with echo	1	1	0	0	0	0	0	1
300 Bd without echo	1	0	0	0	0	0	0	1

ON - 1

- The following message appears on the screen after a reset (power OFF plus power ON):

A810

The desired commands (refer to command list below) can now be entered via the terminal keyboard. The commands are not executed until the carriage return key (ENTER or LINE FEED) is pressed.

Instruction set

Order (_ = blank)	Meaning	in soft -ware since
LCD	Local keyboard disabled	46 82
LCE	Local keyboard enabled	46 82
STP	Stop	46 82
RWD	Rewind	46 82
FWD	Wind forward	46 82
PLY	Play (reproduce)	46 82
REC	Record	46 82
TPL	Tension loosely threaded tape ("tape load")	46 82
LOC_<address>	Locate to <(-)hh(:)( )(/)mm(:)( )(/)ss>	46 82
LMV_<counter reading>	Locate on move roll counter reading <xxxxxx>, (3 bytes HEX)	46 82
STM_<address>	Set tapetimer to <(-)hh(:)( )(/)mm(:)( )(/)ss>	46 82
SHS	Set higher capstan speed	46 82
SLS	Set lower capstan speed	46 82
SMN	Set Mono/Stereo-switch to MONO	46 82
SST	Set Mono/Stereo-switch to STEREO	46 82
SNB	Set equalization to NAB	46 82
SCR	Set equalization to CCIR	46 82
SVS	Set VARISPEED mode	46 82
CVS	Clear VARISPEED mode	46 82
SRH	Set REHEARSAL mode	46 82
CRH	Clear REHEARSAL mode	46 82
DST	Display the status of the recorder on terminal (clear with CNTL X); possible with MP UNIT 1.820.780 only!	13 83
REA_{i}	Channel i READY (i = 1, 2, or 3)	46 82
SAF_{i}	Channel i SAFE (i = 1, 2, or 3)	46 82
INP_{i}	Channel i INPUT (i = 1, 2, or 3)	46 82
SYN_{i}	Channel i SYNC (i = 1, 2, or 3)	46 82
REP_{i}	Channel i REPRO (i = 1, 2, or 3)	46 82
MTN_{i}	Channel i MUTE (i = 1 or 2)	46 82
MTF_{i}	Channel i MUTE off (i = 1 or 2)	46 82
TDN	Time Code Delay on	46 82
TDF	Time Code Delay off (bypassed)	46 82

CONTINUED ON NEXT PAGE

Instruction set (continued)

Order (_ = blank)	Meaning	in soft -ware since
SAP_<i,j,k>	Set D/A converter <j>, channel <i>, to <k> (i = 1 or 2; j = 0: LEVEL REPRO 1: TREBLE REPRO 2: BASS REPRO 3: EQUALISATION REPRO 4: LEVEL RECORD 5: TREBLE RECORD 6: BIAS 7: EQUALISATION RECORD; k = 2 digits HEX, corresponds to the two least significant digits of the counter display in audio adjust mode)	46 82
SMA_<Address>	Set machine address to <XXXXXX> (6 Digits HEX)	40 85
SCK_<time>	Set clock to <hh(:)( )(/)mm(:)( )(/)ss>	46 82
ST?	Request for status	46 82
TM?	Request for tape counter	46 82
CL?	Request for clock	46 82
PR?	Request if pressure roller engageable (Y=yes, N=no)	46 82
CS?	Request if capstan sync (Y=sync, N=not sync)	46 82
NS?	Request for nominal speed (0 = 3.75 ips; 1 = 7.5 ips; 2 = 15 ips; 3 = 30 ips)	46 82
TH?	Request for Time Code source (0 = left head; 1 = right head wide; 2 = right head narrow; 3 = Line Input)	46 82
MV?	Request for move roll counter reading (3 Bytes HEX)	46 82
AP?_<i,j>	Request for audio parameters channel <i>, D/A converter <j> (i = 1 or 2; j = 0: LEVEL REPRO 1: TREBLE REPRO 2: BASS REPRO 3: EQUALISATION REPRO 4: LEVEL RECORD 5: TREBLE RECORD 6: BIAS 7: EQUALISATION RECORD; Recorder replies with 2 digit HEX number)	46 82
MA?	Request for machine address	40 85
MAN	Muting all channels on	40 85
MAF	Muting all channels off	40 85
	SPECIAL ORDERS:	
D_108_26E	Display RAM content on terminal (see examples)	46 82
UAP_<HEX Addr, Data>	Update audio parameters (see examples)	46 82
P_108_26E	Display RAM content on terminal in MOTOROLA EXORCISER format (see examples)	46 82
L	Reload audio parameters from terminal to recorder in MOTOROLA EXORCISER format	46 82

The above list of orders is not complete and will be enlarged as required.

Examples:

FWD = Fast forward

LOC_-01:43:00 = Autolocator to Address - 1.43.00

SAF_3 = Time code channnel SAFE (recording inhibited)

AP?_1_4_XX = Request for audio parameters channel 1, D/A converter 4 (LEVEL RECORD); XX = hexadecimal reply of the recorder (e.g. A9)

SAP_1_4_A3 = Set audio parameters channel 1, D/A converter 4 (LEVEL RECORD); new value A3 (old value A9 from the foregoing example will be overwritten!)
CAUTION !!! All other parameters such as SYNC or REPRO, tape speed, tape type, equalisation, must be selected at the recorder itself.

D_108_26E = All audio parameters are displayed on the terminal in hexadecimal format, e.g.:

```
      0  1  2  3  4  5  6  7  8  9  A  B  C  D  E  F
0100 xx xx xx xx xx xx xx xx 82 70 90 95 26 B0 30 BB  ...´........&00;
0110 00 00 00 00 66 39 80 87 30 A0 3E 75 62 50 96 87  .....9..0 >..P..
0120 66 39 80 61 .. .. .. .. .. ..
0130 .. .. .. .. .. ..
```

The address of a parameter can be computed as a decimal value by means of the formula below (and must be subsequently translated to a hexadecimal value!):

RADR = ARAM-12 + IDAC + ISYNC*8 + CCAB*12 + SPEED*24 + CHNL*72 + TAPE*144

whereby:

RADR = Address of the parameter (in decimal form)
ARAM = 264 (108 hex), start address of parameter range in the RAM
IDAC = 0 for LEVEL REPRO
= 1 for TREBLE REPRO
= 2 for BASS REPRO
= 3 for EQUALISATION REPRO
= 4 for LEVEL RECORD
= 5 for TREBLE RECORD
= 6 for BIAS RECORD
= 7 for EQUALISATION RECORD
ISYNC = 0 for REPRO MODE
= 1 for SYNC MODE
CCAB = 0 for CCIR equalization (automatically = 0 @ 30 ips)
= 1 for NAB equalizaton (automatically = 1 @ 3.75 ips)
SPEED = 0 for 3.75 ips (9.5 cm/s)
= 1 for 7.5 ips (19 cm/s)
= 2 for 15 ips (38 cm/s)
= 3 for 30 ips (76 cm/s)
CHNL = 0 for channel 1
= 1 for channel 2
TAPE = 1 for tape sort A
= 0 for tape sort B

The address of TREBLE REPRO, SYNC, NAB, 38 cm/s, channel 1, tape sort A, is thus computed as follows:
264-12 + 1 + 1*8 + 1*12 + 2*24 + 0*72 + 1*144 = 465 = 01D1 (hex)

UAP_01D1_5C = Update above audio parameter to 5C

P_108_26E = All audio parameters are displayed on the terminal in hexadecimal form in the MOTOROLA EXORCISER format. This format results in more reliable data transmission because possible errors can be recognized from the CHECKSUM.

```
                Same example as above:
S11B01088270909526B030BB0000000006639808730A03E75625096870B
S11B01206639806130A03E996250966166306A44305446BA62508844AD
S11B01386630.........                                     |\|
\|\|\—|\————————————————————————————————————————————————|  |
  |  |  |                                                |  └—CHECKSUM
  |  |  |                                                |
  |  |  |                                                └—Data
  |  |  |
  |  |  └—Address (hex)
  |  |
  |  └—BYTE COUNT, number of bytes incl. address and CHECKSUM (hex)
  |
  └—for: HEADER RECORD=S0, DATA RECORD=S1, END RECORD=S9
```

2.9 DAILY CARE

Daily care is limited to cleaning the soundheads, the capstan shaft, and the tape guidance elements.

Dust and oxide particles from the magnetic tape coating accumulate principally on the soundheads and the tape guides. In record mode this can cause so-called drop-outs.

Cleaning should be performed daily or more frequently if contamination is visible.

We recommend the STUDER cleaning kit (part No. 10.496.010.00) for this purpose. This kit contains all utensils necessary for cleaning the tape recorder as well as a sound head cleaning fluid and aluminite cleaner.

Procedure

Moisten the yellow piece of cloth with the head cleaning fluid and clean all tape guidance elements. Then wipe the cleaned parts with a dry section of the yellow rag.
Coarse accumulations in the grooves of the right-hand time code head can be removed with a hard brush, the bristles of which have been shortened to approx. 5 mm.

Cleaning the capstan shaft

Clean the rotating capstan shaft with the aid of the yellow piece of cloth and some cleaning fluid.

The capstan shaft normally does not turn when no tape is threaded and if the jumper JS2 (on CAPSTAN MOTOR CONTROL PCB) is in the CAPSTAN SHUT OFF position. In this case the left-hand tape tension sensor is to be lifted lightly by hand; the capstan motor runs until the recorder is switched off or one of the tape command keys (except STOP) is pressed.

Important

Ensure that no cleaning fluid runs into the capstan shaft bearing. The cleaning fluid can also damage the transparent panels of the VU-meters.

Cleaning the scrape flutter roller

For easy cleaning of the scrape flutter roller we recommend to thread an old piece of tape and to insert it behind the left-hand tape lifter. Press PLAY and clean the scrape flutter roller with a felt stick.

SECTION 3 POWER SUPPLY, TAPE TRANSPORT CONTROL page

3.	POWER SUPPLY, TAPE TRANSPORT CONTROL	3/1
3.1	FUNCTIONAL DESCRIPTION	3/1
3.1.1	Power supply	3/1
	Block diagram A810	3/2
3.1.2	MP Unit GR 20 EL 01	3/3
3.1.3	TAPE DECK CONTROLLER GR20 EL02	3/4
3.1.4	BUS CONVERTER GR 20 EL 05	3/4
3.1.5	PERIPHERY CONTROLLER GR 20 EL 04	3/5
3.1.6	COMMAND UNIT GR 21	3/6
3.1.7	SERIAL REMOTE CONTROLLER GR 20 EL 03	3/6
3.1.8	Capstan motor control GR 26	3/7
3.1.9	Spooling motor control GR 24	3/7
3.1.10	Tape tension sensors GR 27, GR 28	3/9
3.1.11	Tape move sensor GR 28 EL 05	3/9
3.2	REMOVING THE TAPE TRANSPORT ASSEMBLIES	3/10
3.2.1	Covers	3/10
3.2.2	Headblock	3/14
3.2.3	Tape tension sensors	3/15
3.2.4	Tape lift assembly	3/16
3.2.5	Pressure roller assembly	3/17
3.2.6	Tape brakes	3/18
3.2.7	Spooling motors	3/19
3.2.8	Spooling motor control	3/19
3.2.9	Capstan motor	3/20
3.2.10	Power supply unit	3/20
3.2.11	Monitor unit	3/21
3.3	MECHANICAL ADJUSTMENTS	3/22
3.3.1	Tape brakes	3/22
3.3.2	Pressure unit	3/25
3.3.3	Tape lift	3/26
3.3.4	Tape tension sensors	3/27
3.3.5	Headblock	3/33
3.4	ELECTRICAL ADJUSTMENTS	3/36
3.4.1	Checking the supply voltages	3/36
3.4.2	Tape tension sensors	3/36
3.4.3	Tape move sensor	3/38
3.4.4	Tape-end sensor	3/38
3.4.5	Tape tension adjustments	3/39
3.4.6	Capstan motor control	3/40
3.4.7	Spooling motor control	3/43
3.5	CIRCUIT DESCRIPTIONS	3/45
3.5.1	Power supply	3/45
3.5.2	STABILIZER GR 07	3/45
3.5.3	MP UNIT GR 20 EL 01	3/46
3.5.4	TAPE DECK CONTROLLER GR 20 EL 02	3/48
3.5.5	BUS CONVERTER GR 20 EL 05	3/51
3.5.6	PERIPHERY CONTROLLER GR 20 EL 04	3/53
3.5.7	COMMAND UNIT GR 21	3/55
3.5.8	SERIAL REMOTE CONTROLLER GR 20 EL 03	3/57
3.5.9	CAPSTAN MOTOR CONTROL GR 26	3/58
3.5.10	SPOOLING MOTOR CONTROL GR 24	3/59
3.5.11	TAPE TENSION SENSORS GR 27, GR 28	3/61
3.5.12	TAPE MOVE SENSOR GR 28, EL 05	3/61
3.5.13	TAPE END SENSOR GR 27, EL 04, GR 28 EL 06	3/61

3. POWER SUPPLY, TAPE TRANSPORT CONTROL

3.1 FUNCTIONAL DESCRIPTION

3.1.1 Power supply

Line voltages:

100, 120, 140, 200, 220, 240 V ±10%, 50 ... 60 Hz

Internal supply voltages
+5.6; +15; -15; +24 V; all stabilized
125 VAC for spooling motor control
130 VAC for controlling the 4-pole capstan motor or
140 VAC for controlling the 2-pole capstan motor

Power supply unit
The line voltage is taken from the 3-pin AC inlet (GR 01) through the 2-pole power switch (GR 02), the line filter (GR 03), an the line voltage selector with the primary fuse (GR 04) to the power transformer (GR 05).

The secondary side of the power transformer supplies the following voltages:
25.6 V; 35.2 V; 130 V; 125 V; 10 V (spare).

The 25.6 V and the 35.2 V are rectified and smoothed (GR 06). All stabilized voltages are generated on the stabilizer board (GR 07) from these two rectified voltages:
25.6 VAC: +5.6 V, +24 V;
35.2 VAC: +15 V; -15 V.

The +5.6 V for the microprocessor are generated by a switching regulator with pulse width modulation. The output current is limited to approximately 7 A.

Voltage regulators with fixed settings generate the +24 V and the ±15 V. The circuit for the ±15 V has been designed so that the currents flowing through the two regulators are identical.

A stabilized voltage that rises inadmissibly because of a defect, will be automatically short-circuited. If the current limiter of the corresponding voltage regulator is defective, the corresponding secondary fuse blows. The connected assemblies are, therefore, protected from consequential damage.

Should one of the stabilized voltages fail, the microprocessor attemps to switch the recorder from any operating mode to STOP and SAFE, if this is still possible.

The line voltage is monitored. The logic state of the recorder is unaffected by transient line voltage failures of less than 80 ms. For longer failures, the recorder automatically enters STOP and SAFE mode before being switched off.

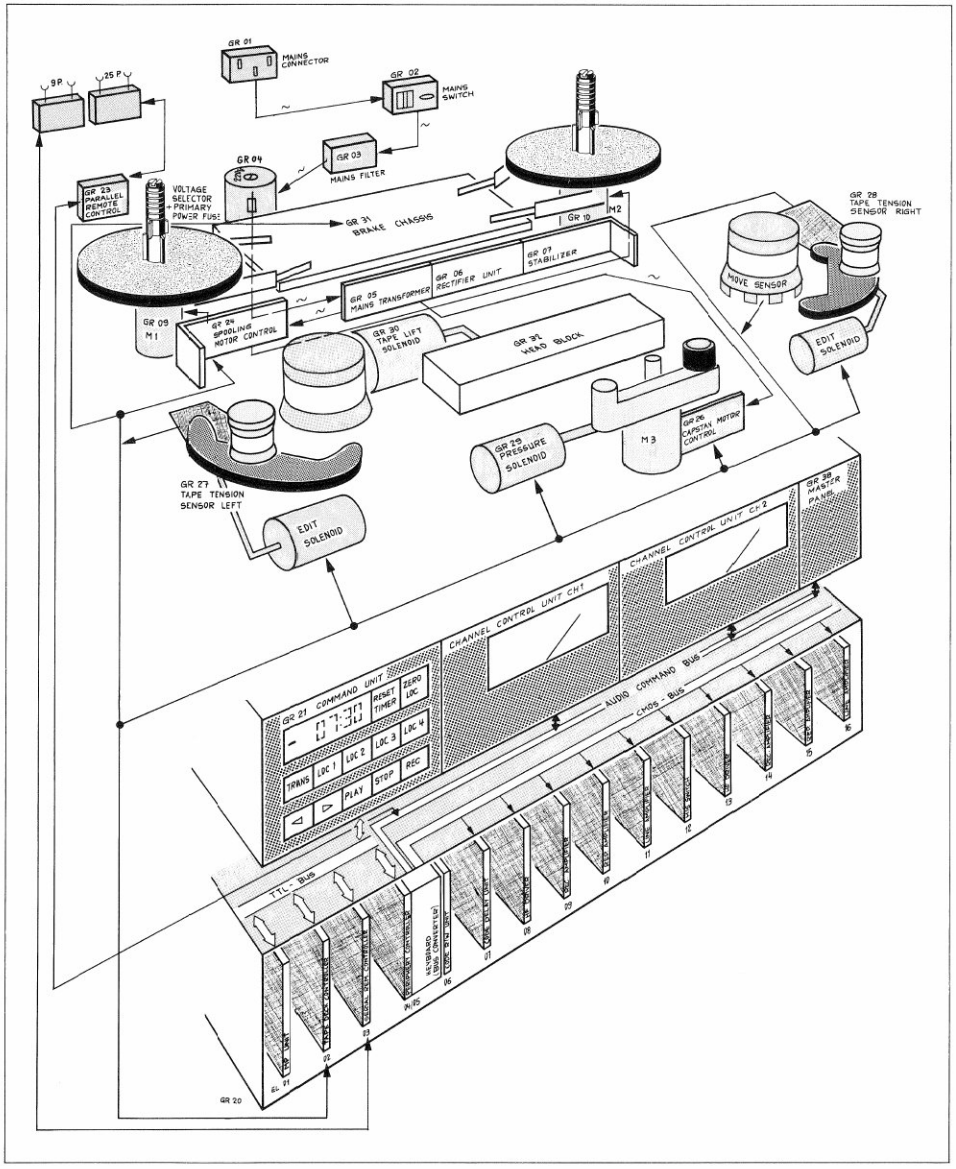

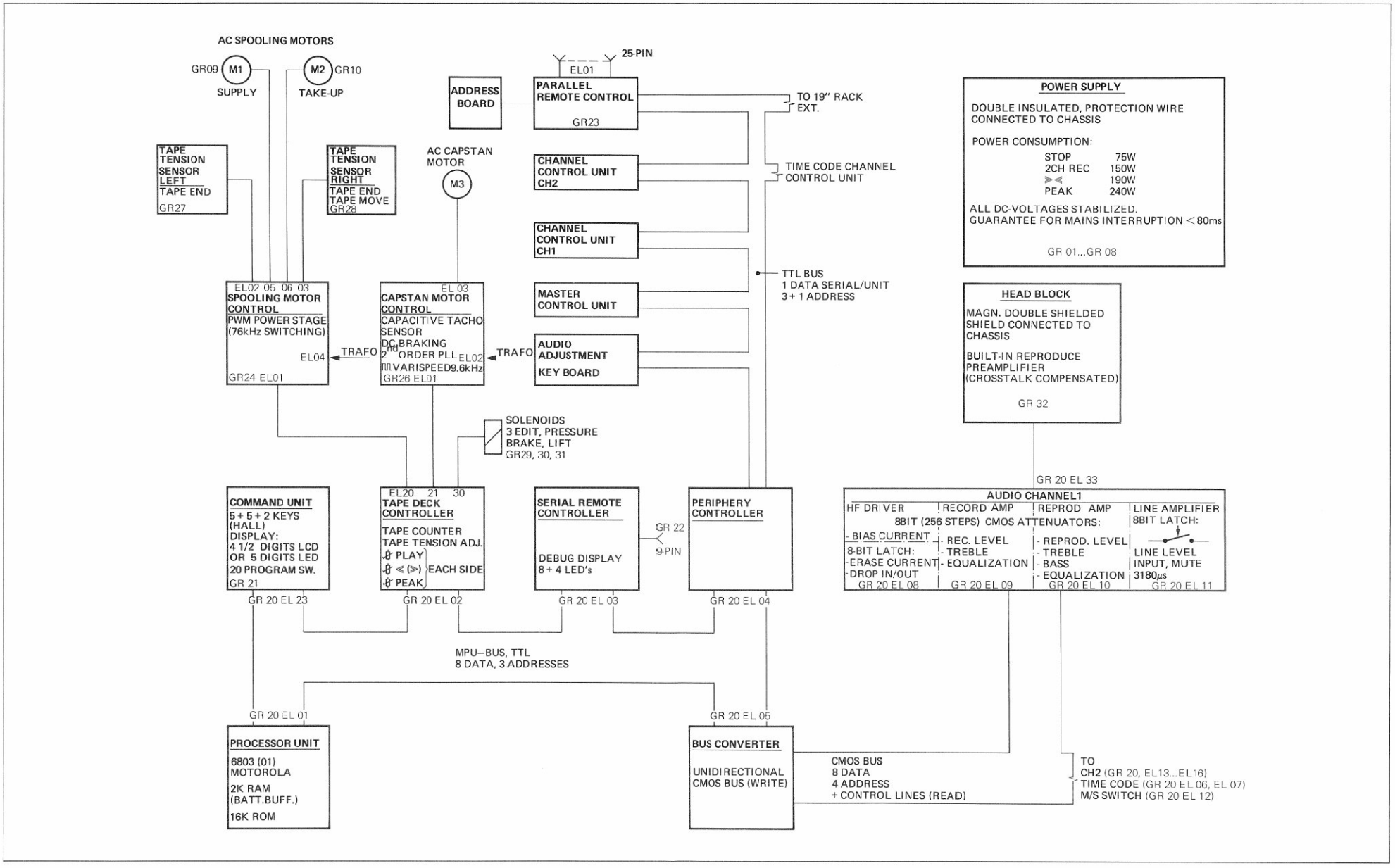
AC SPOOLING MOTORS
GR09 M1 SUPPLY
M2 GR10 TAKE-UP
TAPE TENSION SENSOR LEFT
TAPE END
GR27
TAPE TENSION SENSOR RIGHT
TAPE END
TAPE MOVE
GR28
AC CAPSTAN MOTOR
M3
ADDRESS BOARD
25-PIN
EL01
PARALLEL REMOTE CONTROL
GR23
TO 19" RACK EXT.
CHANNEL CONTROL UNIT CH2
TIME CODE CHANNEL CONTROL UNIT
CHANNEL CONTROL UNIT CH1
TTL BUS
1 DATA SERIAL/UNIT
3 + 1 ADDRESS
MASTER CONTROL UNIT
AUDIO ADJUSTMENT
KEY BOARD
POWER SUPPLY
DOUBLE INSULATED, PROTECTION WIRE CONNECTED TO CHASSIS
POWER CONSUMPTION:
STOP 75W
2CH REC 150W
≫≪ 190W
PEAK 240W
ALL DC-VOLTAGES STABILIZED.
GUARANTEE FOR MAINS INTERRUPTION < 80ms
GR 01...GR 08
EL02 05 06 03
SPOOLING MOTOR CONTROL
PWM POWER STAGE (76kHz SWITCHING)
EL04
TRAFO
GR24 EL01
EL 03
CAPSTAN MOTOR CONTROL
CAPACITIVE TACHO SENSOR
DC BRAKING
2nd ORDER PLL
VARISPEED 9.6kHz
EL02
TRAFO
GR26 EL01
HEAD BLOCK
MAGN. DOUBLE SHIELDED SHIELD CONNECTED TO CHASSIS
BUILT-IN REPRODUCE PREAMPLIFIER (CROSSTALK COMPENSATED)
GR 32
SOLENOIDS
3 EDIT, PRESSURE
BRAKE, LIFT
GR29, 30, 31
GR 20 EL 33
COMMAND UNIT
5 + 5 + 2 KEYS (HALL)
DISPLAY:
4 1/2 DIGITS LCD
OR 5 DIGITS LED
20 PROGRAM SW.
GR 21
EL20 21 30
TAPE DECK CONTROLLER
TAPE COUNTER
TAPE TENSION ADJ.
PLAY
≪ (≫)
PEAK
EACH SIDE
SERIAL REMOTE CONTROLLER
DEBUG DISPLAY
8 + 4 LED's
GR 22
9-PIN
PERIPHERY CONTROLLER
AUDIO CHANNEL1
HF DRIVER
8BIT (256 STEPS)
- BIAS CURRENT
8-BIT LATCH:
- ERASE CURRENT
- DROP IN/OUT
GR 20 EL 08
RECORD AMP
CMOS ATTENUATORS:
- REC. LEVEL
- TREBLE
- EQUALIZATION
GR 20 EL 09
REPROD AMP
- REPROD. LEVEL
- TREBLE
- BASS
- EQUALIZATION
GR 20 EL 10
LINE AMPLIFIER
8BIT LATCH:
LINE LEVEL
INPUT, MUTE
3180µs
GR 20 EL 11
GR 20 EL 23
GR 20 EL 02
GR 20 EL 03
GR 20 EL 04
MPU–BUS, TTL
8 DATA, 3 ADDRESSES
GR 20 EL 01
GR 20 EL 05
PROCESSOR UNIT
6803 (01)
MOTOROLA
2K RAM
(BATT.BUFF.)
16K ROM
BUS CONVERTER
UNIDIRECTIONAL CMOS BUS (WRITE)
CMOS BUS
8 DATA
4 ADDRESS
+ CONTROL LINES (READ)
TO
CH2 (GR 20, EL13...EL16)
TIME CODE (GR 20 EL 06, EL 07)
M/S SWITCH (GR 20 EL 12)

3.1.2 MP Unit GR 20 EL 01

1.810.752/1.820.780

The MPU logic converts the input commands into logic signals for the control; it stores the audio parameters, the locate addresses, and, whenever the recorder is switched off, also the momentary operating status. The clock frequency of the microprocessor is also the central control for the recorder timings: Capstan motor control, switched spooling motor output stage, audio, time code.

Bus and select lines connect the:
- Tape deck controller
- Audio controller
- Command unit
- Serial remote controller

The TTL MPU bus features 8 data lines and 3 address lines as well as separate select lines to the individual controllers.

Microprocessor

The MC 6803 is a bidirectional, bus-oriented 8-bit parallel microprocessor with 16 address bits. It is implemented in NMOS technology, is TTL compatible, and requires only one supply voltage (+5 V). Seven different addressing methods are possible and its internal instruction set comprises 72 commands. The internal 128 byte RAM is not required for this application and is ignored by the program. External memory up to 64 K can be addressed with the 16 address bits.

In the implemented operating mode (EXPANDED MULTIPLEXED MODE No. 2), PORT 3 functions as a time-division multiplex address/data bus.

The internal clock frequency is 1.2288 MHz which is derived by dividing the external quartz frequency of 4.9152 MHz by four.

The clock frequency is further divided down to the following frequencies:
- :4 = 307.2 kHz (reference frequency for the HF driver, erase and bias frequency)
- :16 = 76.8 kHz (clock frequency for spooling motor output stage)
- :120 = 9.6 kHz (reference frequency for capstan motor control).

External memories

The external memories comprise 4 x 4K PROM and 2K RAM (1.810.752) or 3 x 8K PROM and 2K RAM (1.820.780) respectively plus a rechargeable buffer battery. The battery is charged by the +5.6 supply voltage and feeds the RAM when the recorder is switched off.

The complete machine program is stored in PROM. The audio data, the tape timer information, the selected functions, the locate addresses, and the tape transport status are stored in RAM.

RESET

The RESET input fulfils two functions:

- Correct initialization of the microprocessor during the power-on sequence; the RESET input must be kept below 0.8 V until the supply voltage V/CC has reached at least 4.75 V so that the internal clock generator can stabilize itself during this time.

- If the microprocessor functions incorrectly, it is reinitialized either automatically or with switch S2, and the program is restarted.

INTERRUPT

An interrupt routine is initiated if a line voltage failure is detected by the power supply (T-PWRON = 0). The current instruction is completed before the program branches to the interrupt routine. The operating condition at the time of the interrupt is stored in the RAM and a STOP command is automatically transmitted to the tape transport after 80 ms. If the line voltage returns before the 80 ms have elapsed, the INTERRUPT routine is cancelled and normal program execution continues.

The new version of the MPU board 1.820.780 supports the following additional features:

- Either LED or LCD tape timer display (selectable with jumper on TAPE DECK CONTROLLER).
- Automatic MUTING during spooling.
- Displaying the equipment status on the connected terminal (with the DST command).

3.1.3 TAPE DECK CONTROLLER GR20 EL02

1.810.750

The TAPE DECK CONTROLLER is responsible for transmitting the commands from the microprocessor to the tape transport and for reporting the tape transport status to the CPU. It fulfils the following functions:

- Setpoint input for spooling motor control with 2 x 3 trimmer potentiometers. Control of tape transport solenoids (brake, 3 x EDIT, pressure and tape lift).
- Reading in tape transport status.
- Data for capstan motor control.
- Interpretation of tape move sensor.
- Supply voltage monitoring.
- Monitoring the limit switches of the tape tension sensors (torn tape!).

3.1.4 BUS CONVERTER GR 20 EL 05

1.810.754

TTL/CMOS bus converter (CMOS bus with 8 data bits and 4 address bits). Interface to audio section; transmits only data from microprocessor to audio section (WRITE only).

The audio parameters transmitted by the MPU are written into the audio amplifier through the TTL data bus, the bus converter, and the CMOS bus:

- Input and output level 0, 4, 8 or 10 dBm
- Change-over INP, SYNC, REP
- MUTE
- Equalization 3180 µs
- Erase current
- Drop-in or drop-out

The following alignments are performed by digital/analog converters (256-step attenuators):

- Reproduce level
- Reproduce frequency response (treble, bass)
- Reproduce equalization
- Record level
- Record frequency response (treble)
- Record equalization
- Bias current

The bus converter essentially consists of an interface circuit PIA (PERIPHERAL INTERFACE ADAPTER) and subsequent TTL/CMOS converters.

3.1.5 PERIPHERY CONTROLLER GR 20 EL 04

1.810.753

The PERIPHERY CONTROLLER is the interface to the serial TTL bus (1 serial data bit per peripheral unit; 3 address bits; 1 READ SELECT line and 1 WRITE SELECT line).

Data, address and READ/WRITE select lines connect the following units:
- Audio controller keyboard; device for inputting audio parameters.
- Channel control unit CH1; keys and status indicator lamps channel 1.
- Channel control unit CH2; keys and status indicator lamps channel 2.
- Channel control unit CH3; push buttons and status indicator lamps for time code channel.
- Master panel; push buttons and status indicator lamps for tape speed, mono-stereo switch (or tape bias selector), and CCIR/NAB equalization.
- Remote interface; interface to parallel remote control.

The PERIPHERY CONTROLLER essentially consists of the interface circuit PIA (PERIPHERAL INTERFACE ADAPTER).

Input device for audio parameters (1.810.755):
Comprises 11 keys, 13 status indicator lamps (LED), and 8 code switches. The audio parameters programmed with the keys are acknowledged with status indicator lamps. The code switches are used for:
- Changing over the erase current for full-track, 2-track, and 2-track with time code, as well as timing for drop-in and drop-out offset.
- Selecting the erase current for full-track, 2-track, and 2-track with time code.
- Operating the track mode and output selectors individually for each channel or in parallel for both channels.
- Setting the line level for inputs and outputs.
- Same audio parameters for CCIR and NAB equalization.
- Enabling automatic muting (AUTO MUTE) of the outputs during spooling.
- Enable the input device.

Audio command bus:
The information of the track mode selectors (SAFE/READY), the SAFE/READY switch of the time code channel, the output selector (INP, SYNC, REC) as well as the switches of the master panel are transmitted to the MPU through the audio command bus, the PIA, and the MPU TTL bus.

Remote interface GR 23 (1.810.738):
The interface of the parallel remote control is connected through the audio command bus to the PIA of the PERIPHERY CONTROLLER.

The following functions can be controlled remotely by this unit:
Reproduce, record, spooling, stop, fader start, TRANS <REDUCED> (all with status indication); as well as LOC 1, LIFTER (tape lift defeat), and varispeed mode.

Address board (option):
Six code switches are available for entering an address so that several units can be operated on a serial bus. Two additional code switches have been provided for setting the baud rate of the serial interface: 300, 1200, and 9600 (factory setting).

3.1.6 COMMAND UNIT GR 21

1.810.300/1.810.303

Comprises 12 (Hall) keys and the tape timer display (1.810.300: LCD, 4 1/2 positions; 1.810.303: LED, 5 positions) with leading negative sign. Status indicator lamps for keys (without RESET TIMER and ZERO LOC).

Twenty code switches are located on the bottom of the COMMAND UNIT:
- Standard selector for time code (film, Europe, USA black/white, USA colored NTSC)
- Code track type STUDER or PILOT (1.2" offset)
- LIFTER button, momentary or flip-flop button
- Drop-in sequence
- Drop-out sequence
- Tape type "A" or "B" at low speed
- Tape type "A" or "B" at high speed
- Selection of the two or changeover between three/four tape speeds
- Drop-in directly from PLAY by pressing REC key
- Reprogramming the LOC 2, LOC 3, LOC 4 keys

Refer to Section 4.2.9.

The COMMAND UNIT is connected to the microprocessor unit through the MPU bus.

Tape timer display
1.810.736/1.810.768

The display (1.810.736: LCD, 4 1/2 positions; 1.810.768: LED, 5 positions) with leading negative sign is controlled by the MPU through the MPU bus. It displays either the momentary tape address or an error message (in the event of a malfunction in the recorder). The audio parameters entered from the keyboard are displayed in hexadecimal format.

On time code versions equipped with the new time code amplifier 1.820.721/81/82/83/84, the far right decimal point of the LED tape timer display turns on when a code signal is available at the input or is being read from tape (depending on the setting of the INP/SYNC/REP selector).

3.1.7 SERIAL REMOTE CONTROLLER GR 20 EL 03

1.810.751

Interface for serial remote control
- Connection to a terminal
- Data saving on tape
- Expanded test system

Saving the audio parameters on tape
The audio parameters stored in RAM can be copied to tape through the 9-pin serial remote control connector. Pins 4 and 6 of the 9-pin connector must be liked with the RECORD input of the tape recorder. Also refer to Section 4.2.7.

The stored audio parameters can be compared with the RAM content or be reloaded into the RAM by connecting the 9-pin serial remote connector to the REPRODUCE output of the tape recorder. Also refer to Sections 4.2.7 and 4.2.8.

RS 232 terminals
Connector pins 2, 3, 7, 8, and 9 are required for connecting an external terminal equipped with an RS 232 interface. SNDATA is the send line, RCVDATA the receive line.

The two status indicator lamps SEND and RECEIVE indicate whether the microprocessor is sending data to or receiving from the serial interface.

DEBUG display
1.810.757

The DEBUG display equipped with LEDs indicates the status of the data bus, the address bus, and the 3 select lines.
The setting of a code switch determines whether the WRITE or the READ signals of the MPU bus are displayed.

3.1.8 Capstan motor control GR 26

1.810.761.00/81, 1.810.766.00

A 2nd order PLL (PHASE LOCKED LOOP) circuit permits phase-locked synchronization of the capstan speed with the internal or external reference frequency.

A capacitive sensor detects the movement of a toothed ring that is rigidly coupled to the capstan shaft. The change in the capacitance of the sensor causes a frequency modulation at the input of the capstan motor control. The signal is demodulated in an FM demodulator; the resulting voltage is converted to a square-wave signal that is proportional to the frequency of the capstan speed, and constitutes the actual value of the closed loop.

The 9.6 kHz reference frequency which is divided down by a ratio that depends on the selected nominal frequency, constitutes the reference value of the closed loop. The control signal is developped in a phase comparator from the actual value and the reference value, and the capstan lock indication and acknowledgement is generated.

The capstan motor is a maintenance-free AC motor that is supplied by the fuse-protected 130 VAC of the power transformer. The motor current flows into a bridge rectifier and as a pulsating DC current through the control transistor and back into the transformer winding.

DC braking is initiated when the recorder is switched from high to low speed or if rapid speed reduction occurs in varispeed mode.

3.1.9 Spooling motor control GR 24

1.810.760

The switched spooling motor control with pulse-width modulation is arranged on a single circuit board. This module ensures low-loss control of the spooling motors and accurate tape tension in any operating mode as well as four different spooling speeds.

The pulse-width modulator processes the analog signals AN-RFTTL/R (REFERENCE TAPE TENSION LEFT/RIGHT = reference value) from the TAPE DECK CONTROLLER and AN-TTL/R (TAPE TENSION LEFT/RIGHT = actual value) from the tape tension sensors. Comparison of the reference value to the actual value yields analog control signals (AL/AR) which are proportional to the required motor power.

Limiting the spooling speed:
The signal T-CLK-1 of the tape move sensor (square-wave signal with frequency proportional to the tape speed) is converted by a pulse shaper operating with double-edge interpolation into a pulse train of doubled frequency. A pulse of constant width is formed from each edge of T-CLK-1. A DC voltage (B) proportional to the tape speed is generated in a low-pass filter (actual value).
The two reference speed bits of T-TPSPD-1/2 are converted in a D/A converter into a DC voltage. This voltage can be adjusted with a trimmer potentiometer determines the maximum spooling speed (reference value). The signals DL/DR are formed by comparing the reference value to the actual value. These lower the control voltage AL or AR when the preset spooling speed is reached and decrease the driving of the output stage. The signals AN-RFTTL/R determine through differential stages which of the motors (take-up motor) requires reduced driving.

The clock frequency TD-CLK (from the MPU) is 76.8 kHz; noise voltages are eliminated through a Schmitt trigger after which the frequency is taken to a generator which converts the square-wave voltage into a delta voltage. This voltage (E) which is fully balanced relative to neutral is taken to the two modulators and converted by these to pulses of variable width. The pulse width is proportional to the magnitude of the control voltage AL, AR; the maximum width (cyclic duration factor = ED) is 95% and is a function of the amplitude of the (adjustable) delta voltage. If the c.d.f (ED) is less than 2%, the pulses become so small that the spooling motors are no longer driven.
The control pulses are taken to the FETs of the output stage through Schmitt triggers, driver stages, and isolating transformers.

The output stage is supplied directly by the 125 VAC of the power transformer. The 50 ... 60 Hz AC voltage is taken through a fuse to the bridge rectifiers and switched on and off by the NMOS power FETs with a frequency of 76.8 kHz. The motor windings and the storage choke L act as a load. This circuit arrangement has the effect that a pulsating DC current continues to flow through the power FET. This current is switched by the control pulses. The wider the control pulses, the higher the switched power and thus the motor output.

At the instant the current is switched off, the magnetic fiels in the storage choke collapses. As a result, a voltage with inverse polarity is induced in the choke. This voltage is eliminated by the current flowing through the free-wheeling diodes, the commutation circuit, and the motor. The commutation circuit ensures that no dangerous voltage spikes occur.

3.1.10 Tape tension sensors GR 27, GR 28

1.810.728/730

The tape tension sensors comprise:
- Sensor arm with inductive position sensor
- Non-contacting end-of-tape sensor

The tape tension sensor consists of an oscillator circuit, a decoupling circuit, and a screening plate that is mechanically connected to the sensor arm. The movement of the sensor arm causes a change in the coupling of the two circuits, and an electrical image of the sensor arm deflection becomes available at the output (signal AN-TTL/R).

The sensor arm is coupled to the piston of a dash pot between which an infrared light barrier is located. The sensor arm interrupts the light beam when it leaves its neutral position. The light barrier responds either when the end of the tape is reached or if the tape tears (signal T-TENDL/R).

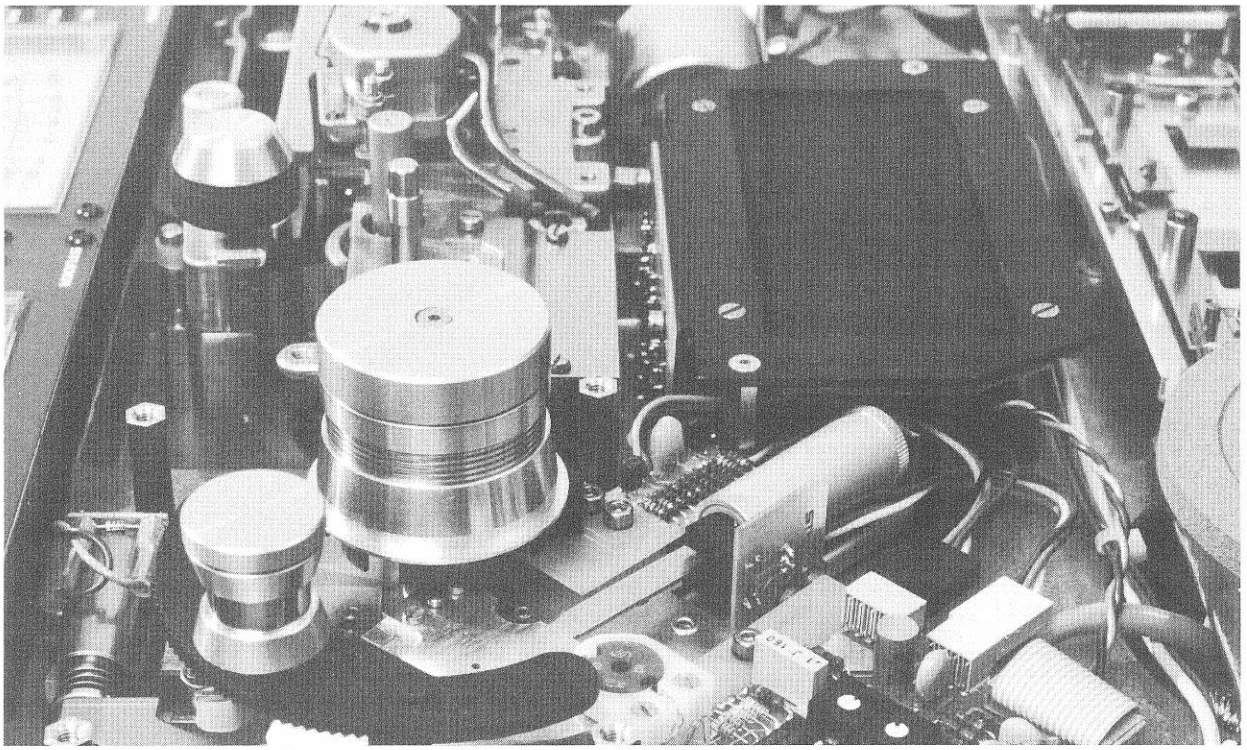

3.1.11 Tape move sensor GR 28 EL 05

1.810.731

The tape move sensor consists of two infrared light barriers and a toothed ring that is coupled to the right-hand guide roller. Two square-wave signals offset by 90° are output (10 pulses per revolution or 16 Hz at 7.5 ips). The following information is extracted (TAPE DECK CONTROLLER) from these square-wave signals:
- Tape timer display
- Tape speed (for spooling motor control)
- Direction of tape travel

3.2 REMOVING THE TAPE TRANSPORT ASSEMBLIES

3.2.1 Covers

WARNING
DISCONNECT POWER CORD BEFORE REMOVING ANY HOUSING COVERS!

The designations of the covers refer to the recorder in upright position.

Headblock cover

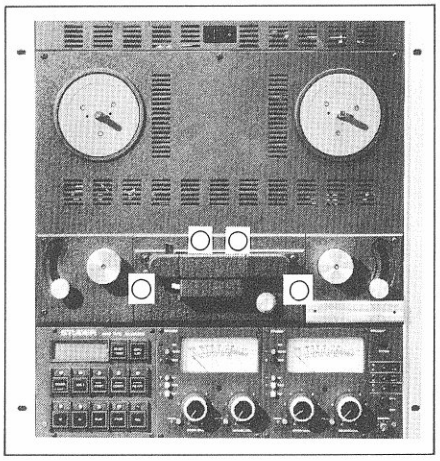

- Unscrew cover of pressure roller (without tools) and remove roller.
- Unfasten 4 screws M4 (hexagon-socket-screw key 2.5 mm)

Head cover
Only the head cover needs to be removed when alingning the azimuth of the soundheads.

- Unfasten 2 screws M4 (hexagon-socket-screw key 2.5 mm) on the left and the right of the head shield.

- When reassembling ensure that the conductors leading to the heads are not pinched (especially in time code versions).

Tape transport cover

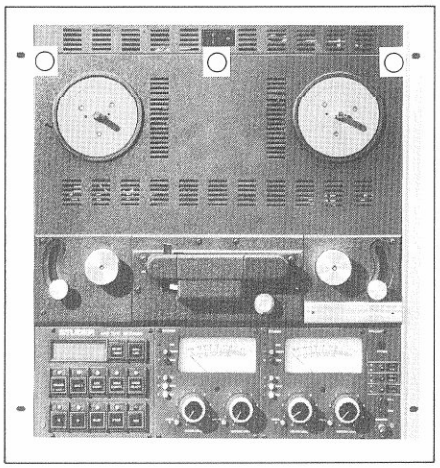

- Unfasten 3 screws M4 (hexagon-socket-screw key 2.5 mm).
- Lift off tape transport cover.

Cover of the tape tension sensor

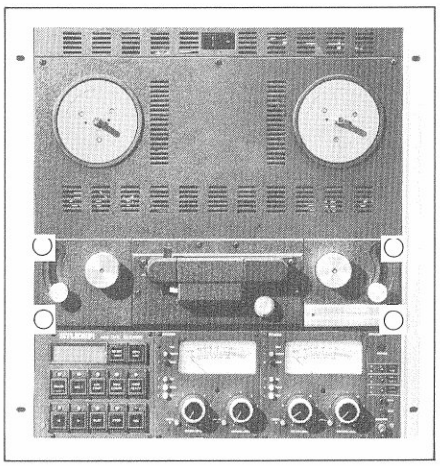

- Remove headblock cover.
- Unscrew cover of guide roller (without tools) and remove roller.
- Unfasten two screws M4 (hexagon-socket-screw key 2.5 mm).
- Remove cover.

Rear cover, upper

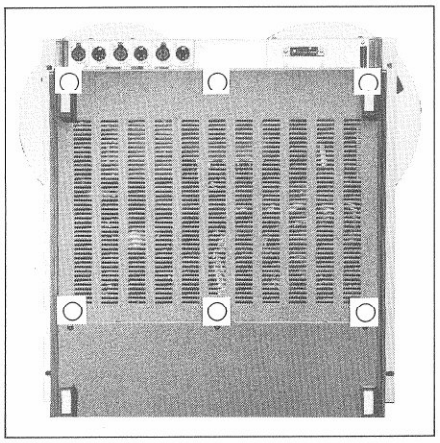

- Unfasten 6 screws M4 (hexagon-socket-screw key 2.5 mm).
- Remove rear cover.

Rear cover, lower

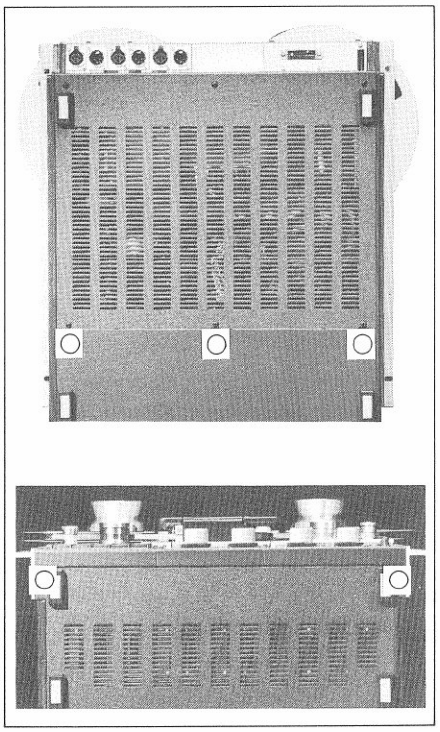

CAUTION
This cover should only be removed by trained maintenance engineers because it exposes the basis board with the CMOS bus!

- Unfasten 5 screws M4 (hexagon-socket-screw key 2.5 mm).
- Remove rear cover.

Top cover

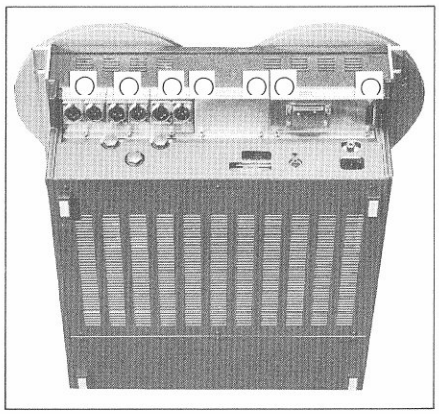

Remove this cover only if the power switch or the power supply unit needs to be dismantled!

- Unfasten 7 screws M4 (hexagon-socket-screw key 2.5 mm).
- Lightly raise cover and slide it out toward the back.

Panel flap

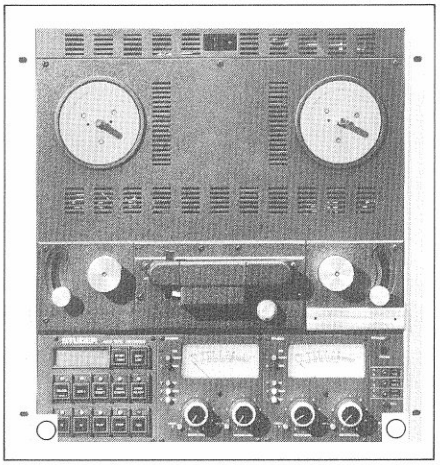

- The panel flap can be opened and locked in two positions by loosening the two captive special screws (hexagon-socket-screw key 2.5 mm). The flap is released lightly upward on the support (on the right-hand side of the flap). Securae the flap with your left hand to prevent it from slamming shut.

Important: If the marking stamp is still installed, it must be removed before the panel is folded up.

- Each of the panel modules is secured to the panel flap with two or four screws M3 (hexagon-socket-screw key 2 mm).

Wooden side panels

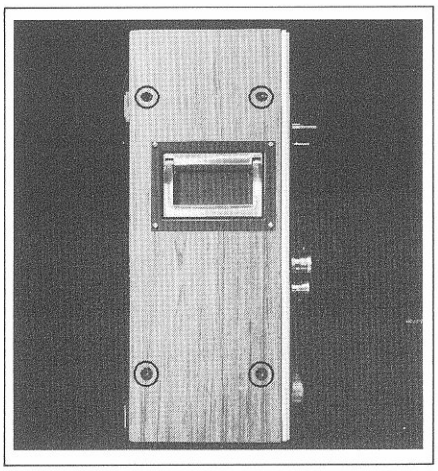

- Unfasten 2 screws M5 x 20 and 2 screws M5 x 35 (hexagon-socket-screw key 4 mm).
- Remove side panels.

3.2.2 Headblock

- Remove cover of headblock assembly (3.2.1.)

CAUTION
To prevent inadmissible magnetization of soundheads, switch the recorder off before removing or installing the headblock!

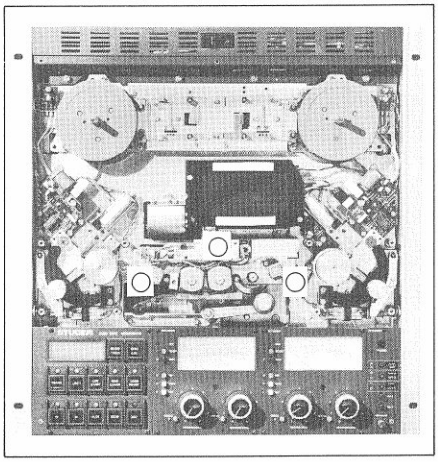

- Unfasten 3 screws M4 (hexagon-socket-screw key 3 mm).
- Carefully slide out headblock assembly so that the capstan shaft will not be damaged.
- Do not turn headblock upside down, otherwise the 3 screws fall out.

3.2.3 Tape tension sensors

- Remove covers of headblock, tape transport, and tape tension sensors as well as upper rear cover as described in Section 3.2.1.

Left-hand tape tension sensor

- Unplug the flat cable labeled TAPE TENSION LEFT at the top connector of the spooling motor control board.
- Pull off two stranded connecting wires (grn, vio) of the EDIT solenoid.

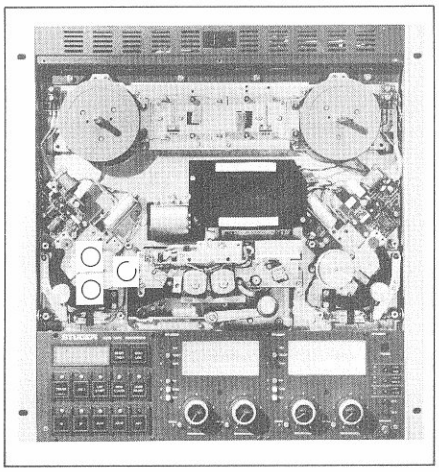

- Unfasten 3 screws M3 (hexagon-socket-screw key 2.5 mm), lightly lift tape tension sensor and guide flat cable carefully through the tape transport chassis.
- Remove tape tension sensor.
- Do not place tape tension sensor upside down, otherwise the 3 screws fall out.

When reinstalling, ensure that:

- Polarity of EDIT solenoid connections is not confused (vio = +).
- Flat cable is plugged into the upper connector (relative to machine in upright position) on the spooling motor control board.

Right-hand tape tension sensor
- Unplug the flat cable labeled TAPE TENSION RIGHT at the lower connector of the spooling motor control board.
- Pull off two stranded connecting wires (grn, vio) of the EDIT solenoid.
- Remove cable duct covers and guide out the flat cable.

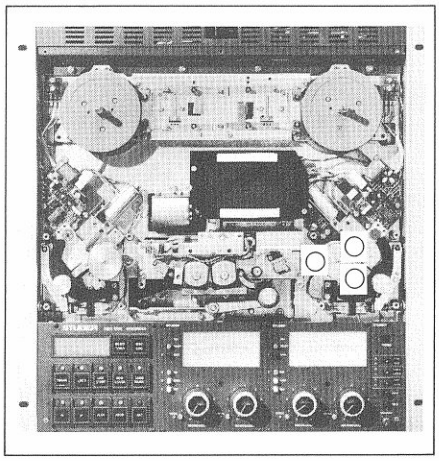

- Unfasten 3 screws M3 (hexagon-socket-screw key 2.5 mm), lightly lift tape tension sensor and carefully guide flat cable out through the tape transport chassis.
- Remove tape tension sensor.
- Do not place tape tension sensor upside down, otherwise the 3 screws fall out.

When reinstalling ensure that:
- Polarity of EDIT solenoid connections is not confused (vio = +).
- Flat cable is plugged into the lower connector (relative to the upright machine) on the spooling motor control board.

3.2.4 Tape lift assembly

Lifter assembly
- Remove headblock cover (3.2.1) and headblock (3.2.2).
- Unhook return spring on pressure arm.

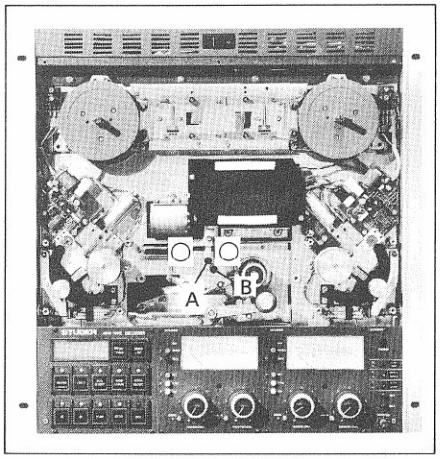

- Unfasten 2 screws M3 (hexagon-socket-screw key 2.5 mm).
- Slide lifter assembly out toward the left while simultaneously disengaging the plastic lug at the pressure arm pin.

- When reinstalling ensure that the coupling pin (A) is located to the left of the roller (B).

Lifter solenoid

- Remove monitor unit (3.2.11) if installed.

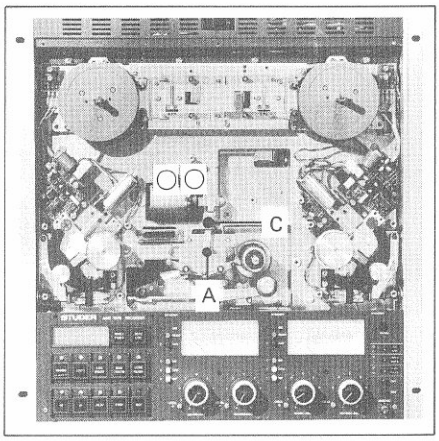

- Remove circlip (C).
- Lift lever (A).
- Unfasten 2 screws M4 (hexagon-socket-screw key 3 mm), draw out solenoid from the front.
  Do not tilt solenoid, otherwise the armature drops out.
- Pull off 2 stranded connecting wires (wht, vio).

- When reinstalling ensure that polarity of connections is not confused (vio = +).

3.2.5 Pressure roller assembly

- Remove headblock cover, headblock and upper rear cover (3.2.1).
- Remove tape lift assembly.
- Pull of 2 stranded connecting wires (gry, vio) of the pressure solenoid.
- Unhook return spring at pressure arm.

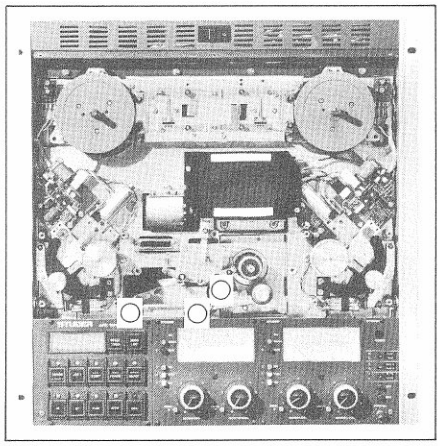

- Unfasten 3 screws M4 (hexagon-socket-screw key 3 mm).
- Carefully draw pressure unit out toward the front.

When reinstelling ensure that:
- The pin on the pressure arm is seated into the plastic lug.
- The polarity of the pressure solenoid connections is not confused (vio = +).

3.2.6 Tape brakes

The recorder must be positioned horizontally in order to remove the brakes!

- Remove tape transport cover (3.2.1).
- Remove reel supports, 3 screws M3 each (recessed head).

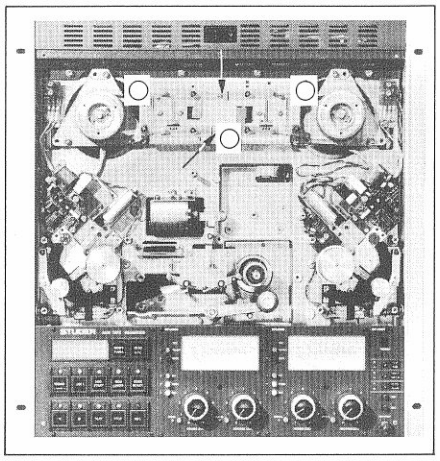

- Unfasten 3 screws M3 (hexagon-socket-screw key 2.5 mm).
- Press lightly on the two brake levers (arrow) to release the brakes to the point where the brake chassis can be carefully lifted.

  CAUTION
  Ensure that the brake bands are not kinked and avoid touching the contact surface with your fingers!
  Kinked brake tapes must be replaced. Clean contaminated tapes with ethanol!

- Pull off connecting wires of EDIT solenoid (grn, vio) and brake solenoid (brn, vio).

- When reinstalling ensure that the polarity is correct (vio = +).

IMPORTANT
The brakes require readjustment after the brake chassis has been installed (3.3.1).

3.2.7 Spooling motors

Position the recorder horizontally in order to remove the spooling motors!

- Remove tape transport cover (3.2.1).
- Remove brake chassis (3.2.6).
- Pull off 4 stranded leads on each connecting board.

Note: The sequence of the wires is not always the same to minimize hum-field interference. Please note sequence before disconnecting!

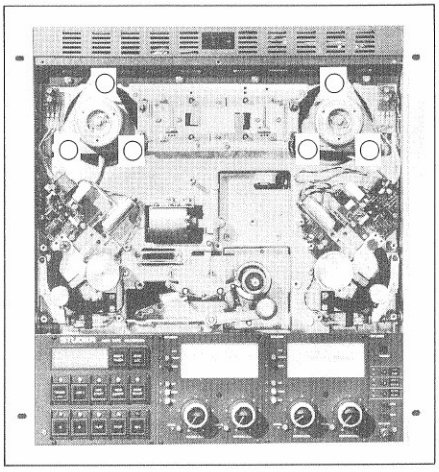

- Unfasten 3 screws M4 each (hexagon-socket-screw key 3 mm).
- Lift out motor toward the top without touching the brake roller.

3.2.8 Spooling motor control

Remove the complete assembly if fuse F1 (T 1.6 A SLOW) on the spooling motor control board requires replacement.

- Remove rear upper panel and left-hand wooden side panel if installed (3.2.1).

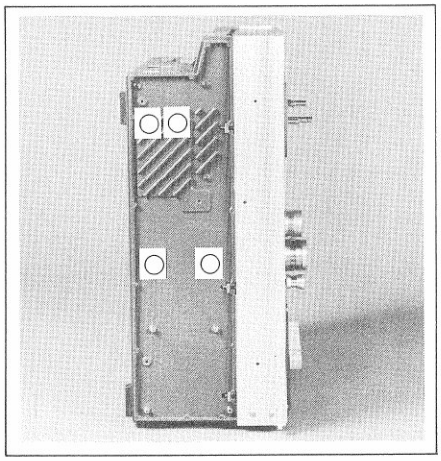

- Unfasten 4 screws (hexagon-socket-screw 3 mm). The stranded connecting leads of the motor control PCB are long enough so that they need not be disconnected for replacing the fuse.
- Unscrew shock protection element (2 x M3, hexagon-socket-screw key 2.5 mm).

3.2.9 Capstan motor

Remove the complete assembly if the fuse F1 (T 500 mA SLOW) on the capstan motor control board requires replacement.

- Remove upper rear panel (3.2.1).
- Unplug flat cable CAPSTAN CTR (on basis board, second connector from the right).
- Open cable duct, guide out flat cable.
- Lift shock protection element off the lower power transformer terminals.
- Pull off 2 blue stranded wires (power transformer terminals 10 and 19 for the 4-pole capstan motor, 12 and 17 for the 2-pole capstan motor).

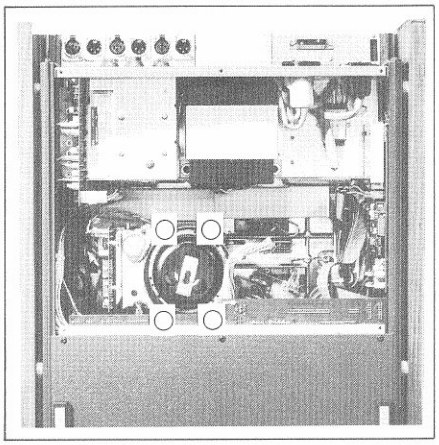

- Unfasten 4 screws (hexagon-socket-screw key 3 mm) (the lower two screws are accessible through holes in the basis board).
- Draw capstan unit (ground capstan shaft) carefully toward the rear.
- Remove shock protection (2 x M3, hexagon-socket-screw key 2.5 mm).

- Proceed carefully when reinstalling to ensure that the capstan shaft will not be damaged.
- No specific polarity (!) is required when reconnecting the two blue stranded wires (terminals 10 and 19 or 12 and 17 on the power transformer).

3.2.10 Power supply unit

- Remove upper rear panel, top cover and if installed also the wooden side panels (3.2.1).
- Unplug connecting leads on power switch.
- Unscrew all connector panels or filler panels (7 x M4, heaxagon-socket-screws 3 mm).
- Remove stabilizer board (multipoint connector and 6 stranded connecting leads, from top to bottom: blu, red, org, brn, yel, grn), 2 screws M4 (hexagon-socket-screw 3 mm) on the right-hand side panel.
- Unscrew spooling motor control PCB, 4 x M4 (hexagon-socket-screws 3 mm) on the left-hand side panel. The connecting leads are long enough; do not detach them.
- Lift shock protection of the lower power transformer terminals, detach 2 x stranded blu (terminals 10 and 19 or 12 and 17 respectively, stranded blk (terminal 14), and stranded red (terminal 15) connecting lead.
- Unfasten 6 mounting screws M4 (hexagon-socket-screw key 2.5 mm, 3 each on the left and on the right side wall). Hold power supply unit so that it will not drop into the recorder.
- Carefully slide power supply unit out through the rear until the two rear mounting holes in the side walls are aligned with the two front tapped holes in the power supply; then secure the power supply temporarily with 2 of the mounting screws.
- Disconnect leads on the two phase-shift capacitors (terminals on each from the top or No. 2: org, bottom terminal or No. 1: brn).
- Unfasten temporary mounting screws and remove power supply unit toward the top.

- When reinstalling, ensure that the stranded connecting leads of the phase-shift capacitors are not pinched.
- No specific polarity (!) is required for the two blue stranded connecting wires (power transformer terminals 10 and 19 or 12 and 17).

3.2.11 Monitor unit

- Unfasten rear upper panel and tape transport cover (3.2.1).
- Unplug monitor terminal (on basis board, second connector from the left).
- Open cable duct, guide out monitor cable harness.
- Unfasten 2 screws M3 (hexagon-socket-screw key 2 mm), remove monitor unit, and carefully guide cable harness out of the tape transport chassis.

3.3 MECHANICAL ADJUSTMENTS

Note:
Jumper JS 3 of the TAPE DECK CONTROLLER must be removed for making the following adjustments. As a result, the monitoring functions (tape tension, tape movement, etc.) are interrupted to prevent triggering of stop commands if deviations from the reference values occur because of the adjustment work.

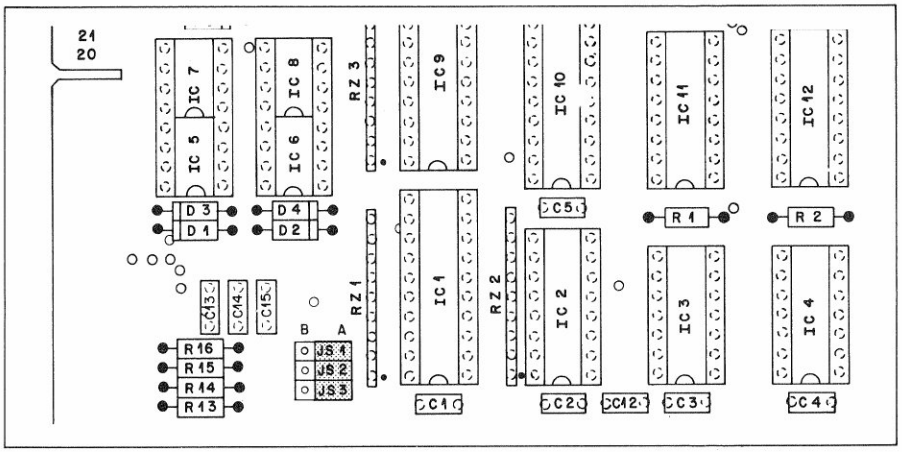

3.3.1 Tape brakes

Inadequate maintenance or incorrect adjustment of the tape brakes can lead to tape tangles or torn tapes. Check in regular intervals that the braking action is smooth and that no loops are formed even when the diameters of the two pancakes differ widely. Check brake bands for wear and contamination.

The tape brakes are self-adjusting: the braking action remains constant over wide ranges even with varying friction coefficients.

Preparatory steps
Remove tape transport cover; remove covers of the tape tension sensors. Detach 3-pin connector of the end-of-tape sensor in the left-hand tape tension sensor.

The brake bands and the brake linings must be absolutely clean and free of grease. Contaminated brakes bands and brake linings can be cleaned with ethanol. Avoid touching them after they have been cleaned.
The brake bands should be free of kinks. Contact with the brake lining along their full width is required.

When replacing the brake drum ensure that there is no residual glue on the new brake drum.
Should the braking action be insufficient after the brake bands have been replaced, they can be roughened with SCOTCH pot cleaning pads.

The braking deceleration can be adjusted by hooking the brake springs into three different positions. Refer to picture below with springs (A) in the maximum position, springs (B) in the middle position.

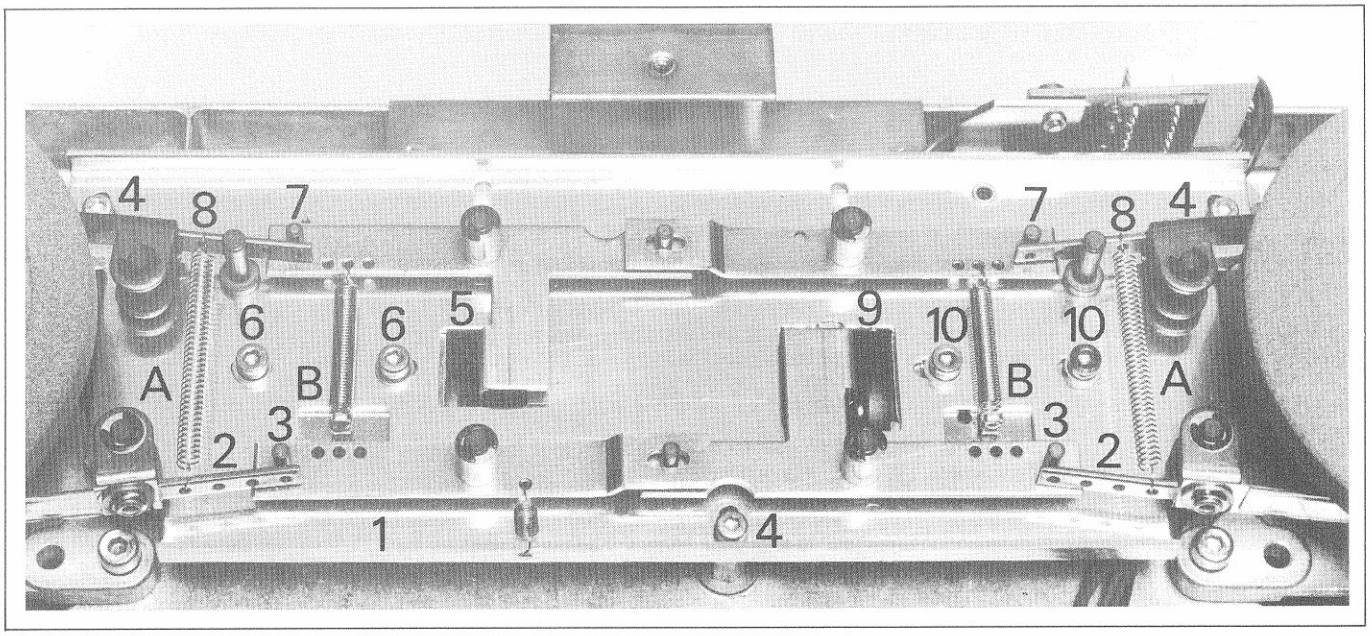

Basic adjustment of the brake chassis

Switch tape recorder off.
Shift brake chassis (1) so that the distance between the two brake levers (2) and the lifting pin (3) is approx. 1 mm. Secure the setting with three hexagon-socket-head cap screws (4) (key size 2.5 mm). Ensure that the chassis is only shifted parallel. Switch recorder on.

Check that the two brake systems are released simultaneously by the two lifting pins. Should this not be the case, check that the spooling motors are positioned correctly. If minor differences still remain they can be corrected by lightly bending the levers (2).

Adjusting the EDIT solenoid

The edit solenoid {5} must be energized for adjusting it:
connect power cord and switch power on.

The two fixing screws {6} (hexagon-socket 2.5 mm) of the solenoid {5} should be shifted in such a way that a clearance of approximately 1 mm is obtained between the lifting pin {7} and the brake lever {8}. The lever {2} must contact the pin {3}.
Retighten the two fixing screws {6}.

Adjust the brake solenoid

Also detach the 3-pin connector on the right-hand tape tension sensor! The PLAY key must be pressed (brakes released) for adjusting the brake solenoid.

Unfasten the two mounting screws (10) (hexagon-socket-screw key 2.5 mm) of the brake solenoid (9) and shift it so that the tip of the lever (2) travels 2 to 3 mm between the neutral position and released brake. Retighten the two mounting screws (10).
The two spooling motors should rotate freely when the brake system is released. Both brake levers should lift in parallel.

Correct functioning of the brakes can be checked by brief forward and backward rotation of the spindles (power switched off).

Measuring the braking torques

Switch recorder on (STOP lamp illuminated for measuring the EDIT braking torque).

Mount an empty reel with a hub diameter of approx. 100 mm that contains approximately 2 to 3 m of tape in the take-up or supply direction.

Hook spring dynamometer (0 ... 5 N) into leading end of tape and pull gradually forward (in direction of the arrow).

The EDIT braking torque should measure 0.8 to 1.1 N (80 ... 110 p) in the take-up or the supply direction. Correction is possible with spring (A).

Reconnect the 3-pin connectors of the tape-end sensors of both tape tension sensors before measuring the braking torque.

The tape tension sensors must be in their neutral position.
The braking torque in the supply direction should measure 2.6 to 3.2 N (260 ... 320 p). The difference in braking torque between the left and the right side should not exceed 0.5 N (50 p).
Correction is possible with spring "B".

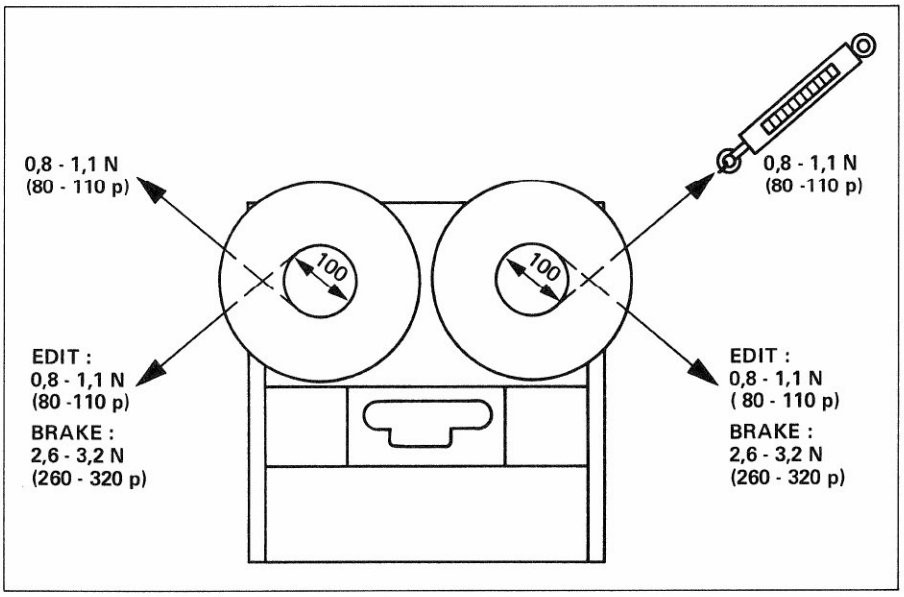

3.3.2 Pressure unit

The pinch roller arm is actuated by a solenoid. The pinch roller force is determined by a built-in spring.

Adjusting the pinch roller force

Switch recorder off. Remove tape transport cover and pinch roller cover; detach the 3-pin connectors of the two tape tension sensors. Fasten a piece of nylon string to the pinch roller shaft and hook spring dynamometer 0 ... 20 N (0...2 kp) into a loop of the string.

Switch recorder on. Select PLAY. Pull spring dynamometer perpendicularly to the pinch roller arm until the arm lifts off the capstan shaft.
The spring dynamometer should give a reading of 8...10 N (800...1000 p).
Should the spring force be stronger or weaker, loosen 2 fixing screws of the pinch roller solenoid (hexagon-socket 3 mm) by a few turns and slightly shift the pinch roller solenoid until the desired spring force is attained. Re-tighten the screws of the pinch roller solenoid.

Ensure that the arm returns smoothly to the neutral position. Should this not be the case, the solenoid may be twisted.

Check:

Remove jumper JS3 on TAPE DECK CONTROLLER. With your index finger lightly press the pinch roller arm against the capstan shaft so that the pinch roller just starts to turn.
Press PLAY key: the pinch roller arm should visibly move another small amount toward the capstan shaft. This means that the pinch roller solenoid functions correctly so that only the tension spring in the solenoid plunger provides the coupling between the pinch roller arm and the solenoid plunger (no mechanical contact between the two).
Check this play by repeatedly pressing STOP and PLAY.
The pinch roller force must be increased if no visible play exists.

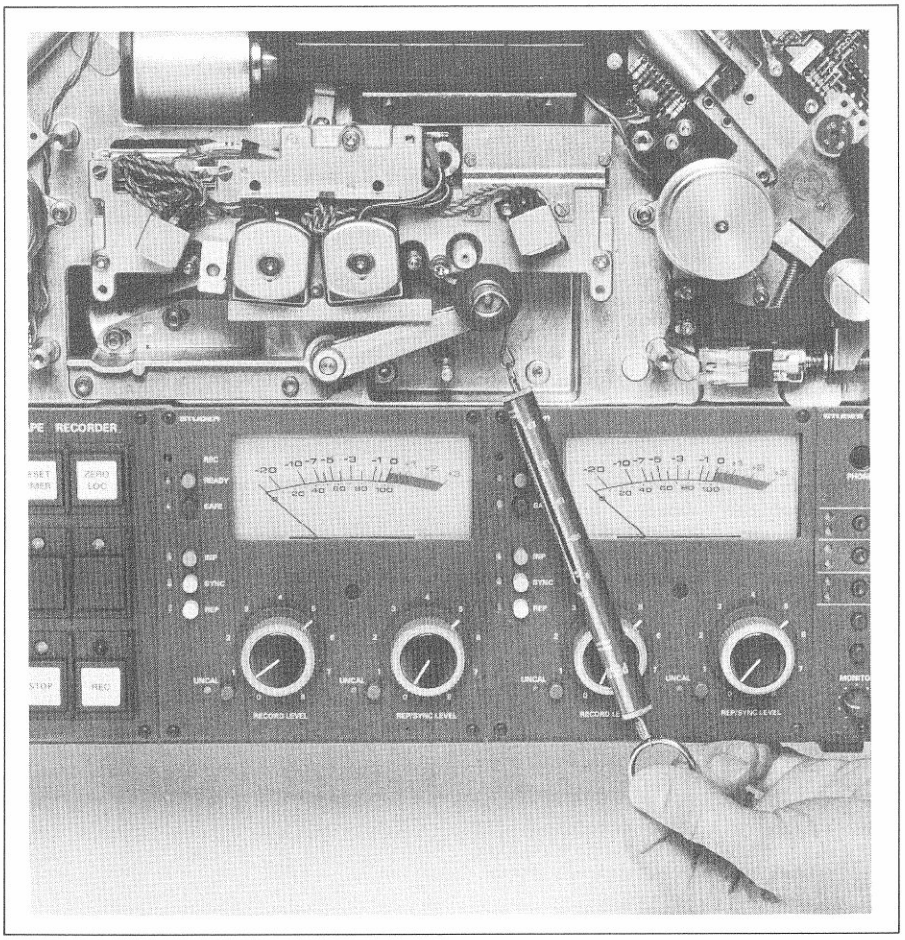

3.3.3 Tape lift

During spooling, the two tape lift pins are moved by the tape lift solenoid so that the tape no longer contacts the face of the soundheads. This prevents unnecessary wear of the soundheads.

Preparatory steps

Switch recorder off.

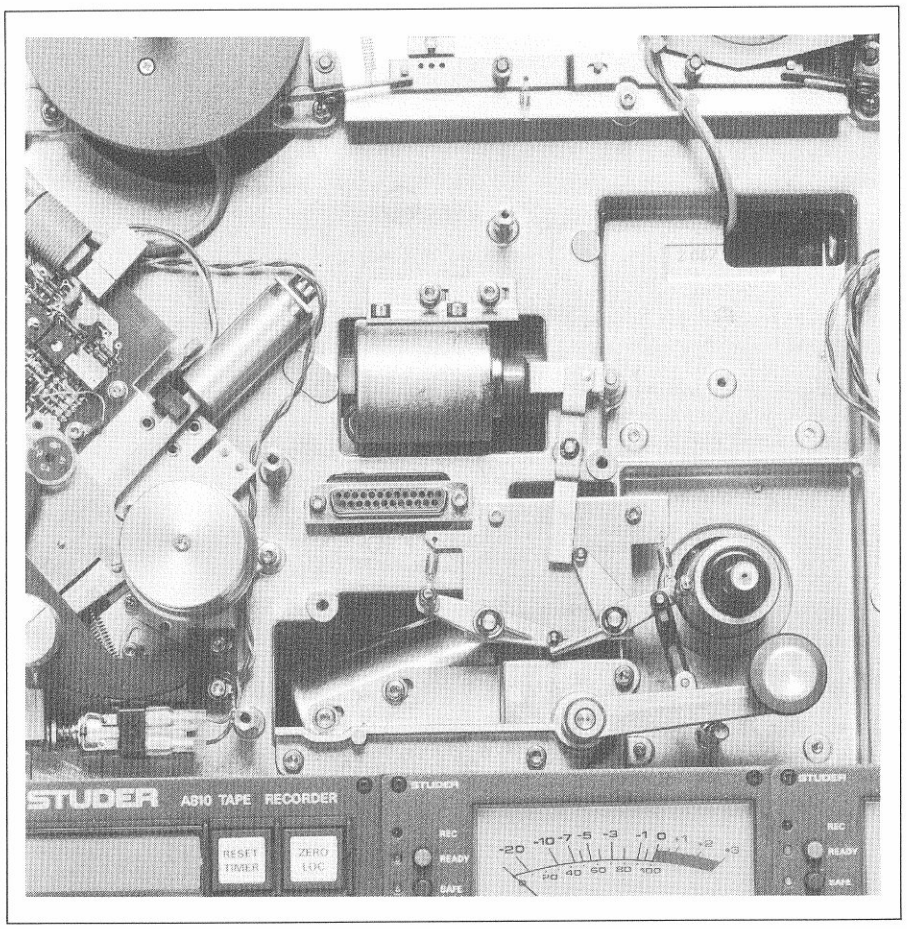

Adjusting the tape lift solenoid

Mount tape (reel diameter 18 cm) and switch recorder on.

Press one of the spooling keys.
Push pressure roller by hand against the capstan up to the stop position. The tape should contact neither the pressure roller nor the capstan. Should this still be the case, loosen the two mounting screws (hexagon-socket-screw key 3 mm) of the tape lift solenoid. Press one of the spooling keys and shift tape lift solenoid slightly to the left. Retighten mounting screws and repeat check.

- **Important:** On recorders equipped with a time code read head, the lifter solenoid must be adjusted in such a way that the lifting pin lifts the tape approximately 1 mm off the capstan shaft. The tape may touch the pinch roller when the latter is manually pressed to the stop position.

When the lifter solenoid is de-energized, the left-hand lifting pin must contact neither the scrape flutter roller nor the erase head.

Press STOP key and check that the armature movement is not restricted; if necessary loosen one mounting screw of the tape lift solenoid and slightly twist solenoid, until the armature moves freely. Retighten the mounting screw.

3.3.4 Tape tension sensors

Note
The illustrations always refer to the left-hand tape tension sensor.

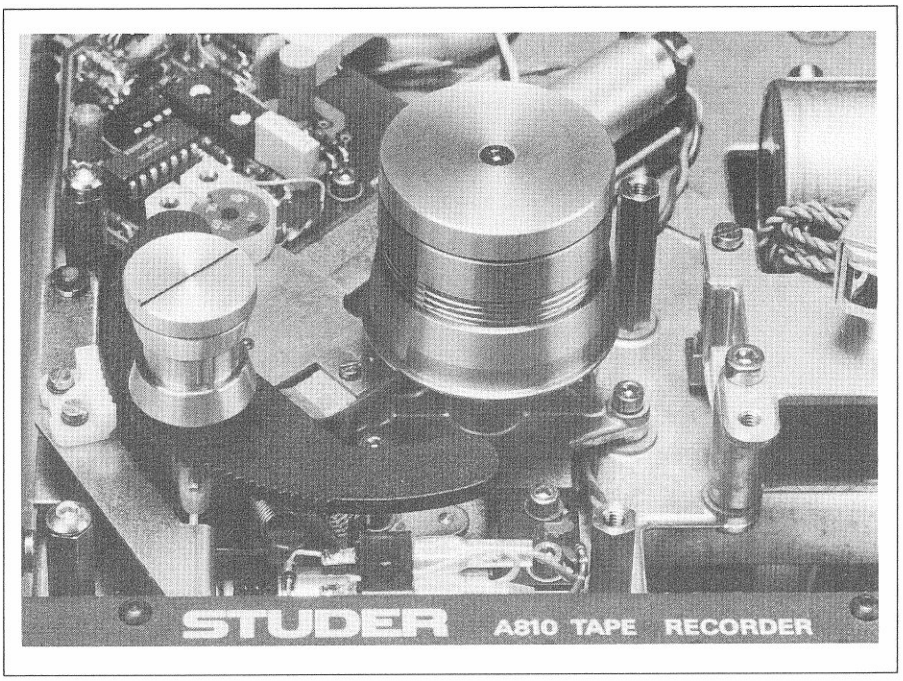

Checking the mechanical functions

Mobility of bearing and dash pot:
Manually push the tape tension sensor from its neutral position to the end stop. No grinding or rattling noise should be audible. The protective flap should not touch anywhere; the tape tension spring and the stop spring should not touch any other parts.

Damping:
Check the continuous and immediate damping in tension direction and also the function of the non-return valve in the dash pot cylinder.
A replacement dash pot requires no adjustments since these have been made at the factory.

CAUTION:
Ensure that the cylinder base is not twisted when installing the dash pot!

Checking the tape travel:
With the tape tension sensor installed and a tape mounted, visually check the tape travel (height adjustment) in PLAY mode on the idler roller and on the small guide roller.

EDIT solenoid

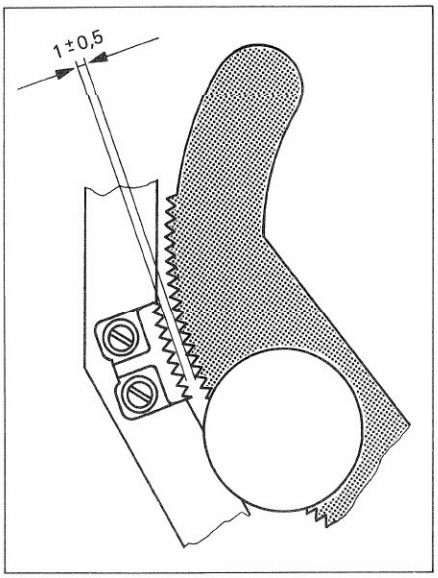

With the EDIT solenoid in the neutral position, the gear segment must be adjusted so that the teeth mesh correctly and parallel into the serration of the toothed disc (slot cover).

The distance between the tips of the teeth of the gear segment and the toothed disc must be 1 mm ±0.5 mm throughout the entire rotating range of the tape tension sensor.

Adjusting the EDIT solenoid:

CAUTION: Shift the solenoid only parallel to the base plate!

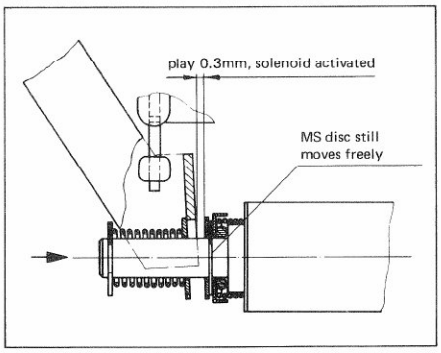

Press the solenoid plunger with your finger to the stop position.
Unfasten the two hexagon-socket-head screws (2.5 mm) and shift the solenoid in parallel until the Ms disc still moves freely (corresponds approximately to the play shown in the drawing).
Retighten the two screws and secure them laterally with locking paint.

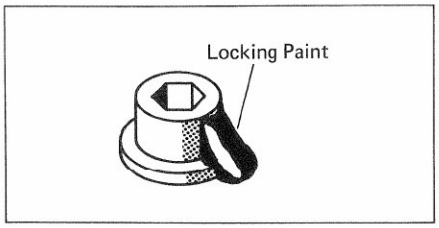

Adjusting the tape tension spring

Switch recorder off. Remove guide roller, reinstall cover. Mount tape tension alignment gauge, hook spring dynamometer to the shaft and pull parallel to the lateral edge of the tape recorder.

The tape tension spring is adjusted with the turnbuckle {A}. Please note that the left-hand tape tension sensor is to be adjusted to a value of 1 N ± 0.1 N (100 p ± 10 p), the right-hand tape tension sensor to 1.2 N ± 0.1 N (120 p ± 10 p) when the tape tension sensors are deflected to -10° (corresponds to the cover touching the lower line of the gauge).

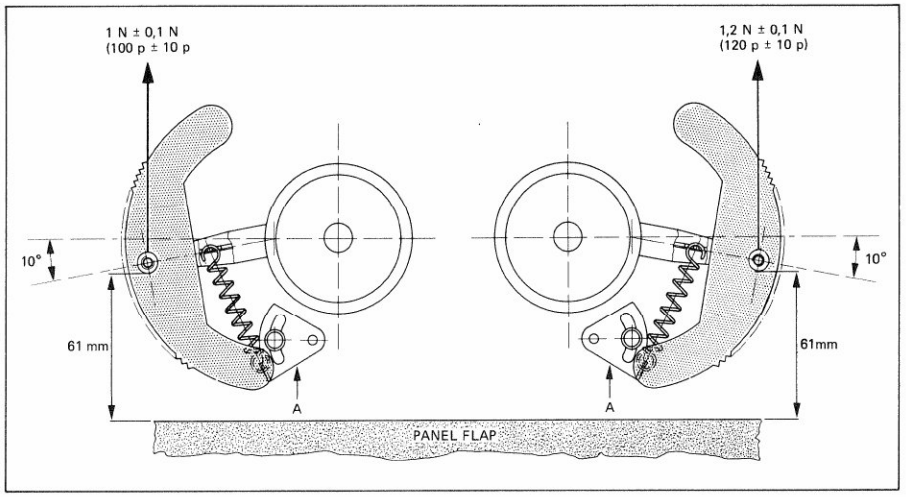

The measurement may only be taken in the wind-up direction because of the hysteresis of the spring dynamometer!

After the adjustment has been made, tighten the screw of the turnbuckle and secure it with locking paint.

Gauges with scale division in degrees for adjusting the tape tension can be ordered under the part number 10.010.001.15.

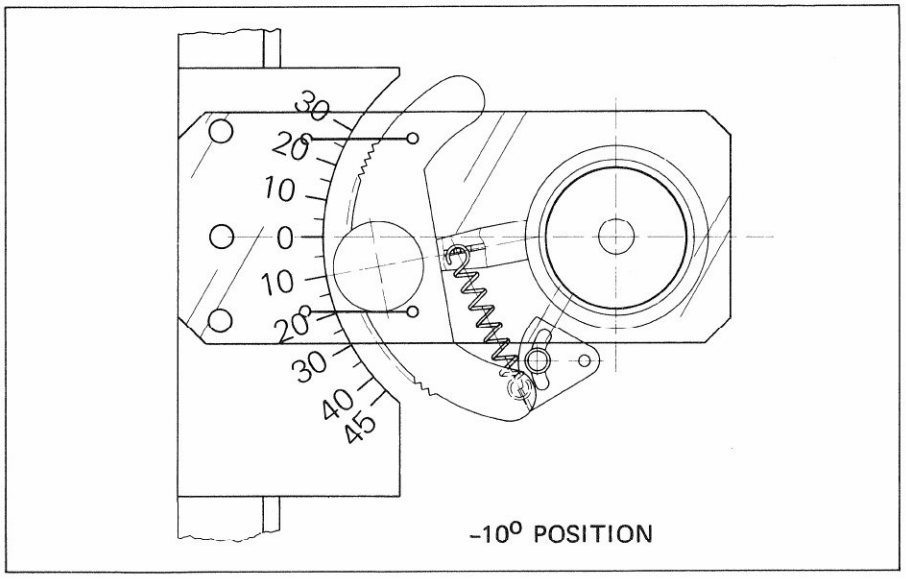

End-of-tape sensor
(Circuit board on the dash pot)

Switch recorder on.

Move arm of tape tension sensor approx. 2 to 2.5 mm from its end stop and adjust limit switch PCB so that the signal T-TENDL (left-hand tape tension sensor) or T-TENDR (right-hand tape tension sensor) just switches to logic 1 (HIGH).

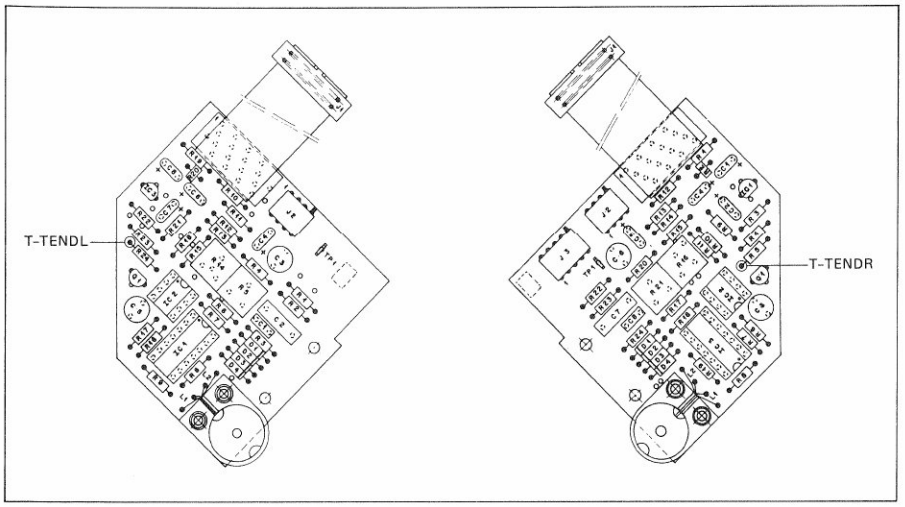

Pretension arm with spring dynamometer (10 N ±1 N or 1 kp ±100 p). The signal T-TEND should remain at logic 0 (LOW).

Tighten adjusting screw and secure it with locking paint.

Reinstall guide roller.
For electrical adjustments of the tape tension sensors refer to Section 3.4!

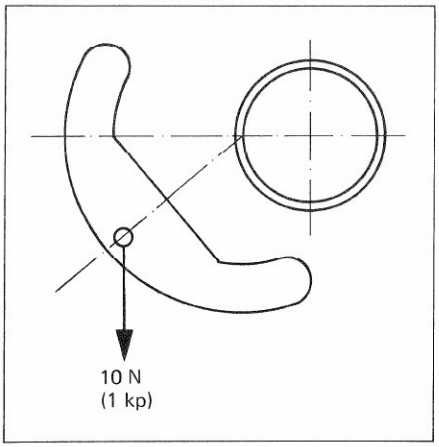

IMPORTANT
Reinstall jumper JS3 on TAPE DECK CONTROLLER!

Adjusting the dash pot:

Before adjusting the dash pot check or adjust the tape tension spring and the electrical alignment of the tape tension sensor (3.4.2)!

The following adjustments of the damping action refer to the left-hand tape tension sensor; deviations for the right-hand tape tension sensor are indicated in brackets!

- Remove cover of the tape transport and the tape tension sensors; turn the top left and right mounting screws of the tape transport cover 2 to 3 turns into the corresponding tapped hole. Place recorder upright on the edge of the work bench so that the front panel is flush with the edge of the bench.
- Calibrate oscilloscope in the DC setting (DC voltage coupling) so, that the voltage readings 0.0 V and +2.4 V fall on the scale lines on the bottom and the top edge of the screen. Adjust sweep rate to 0.1 s per scale division, trigger input to "EXTERN" and "positive slope".
- Connect oscilloscope to TP1 (TP1) of the tape tension sensor, signal AN-TTL (AN-TTR), trigger input of oscilloscope at T-TENDL (T-TENDR), as shown in diagram.

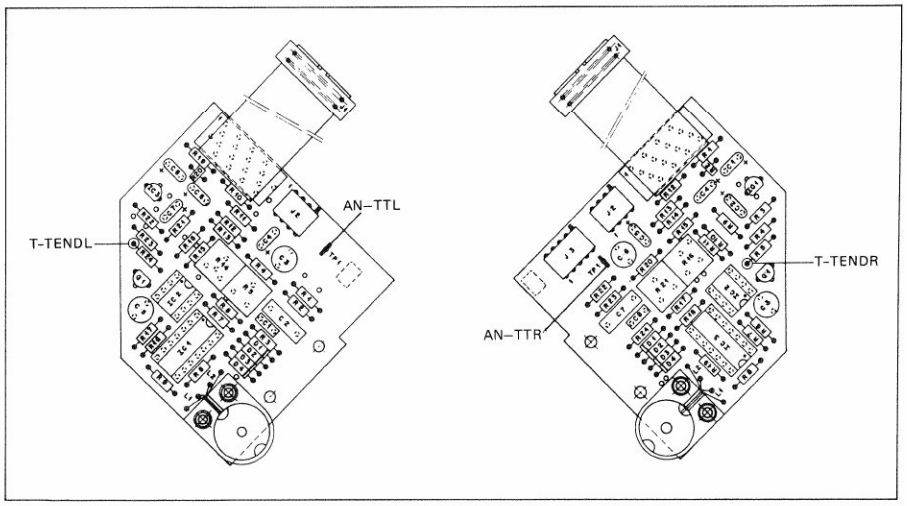

- Tie a loop into both ends of an approximately 1 m long piece of tape. Hook one loop into the left-hand (right-hand) screw of the tape transport cover, thread tape vertically down around the idler roller of the tape tension sensor and the guide roller, then further vertically down. Hook a weight of 130 g (part No. 10.010.001.19) into the second loop (refer to diagram).

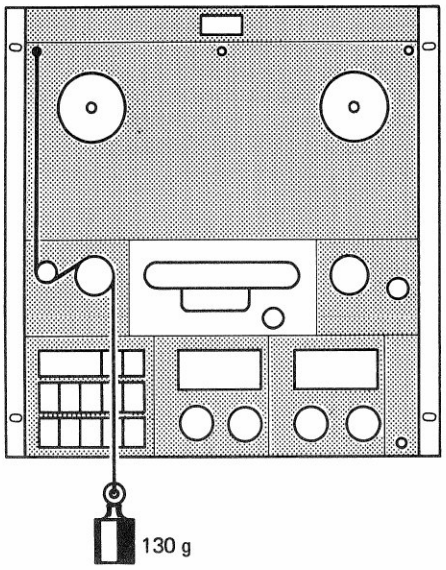

- Remove TAPE DECK CONTROLLER PCB.
- Switch recorder on.
- Manually press guide roller of the tape tension sensor against the lower stop (neutral position) and relax it. The curve appearing on the screen should intersect with the calibrated 2.4 V line at 0.6 s ±0.1 s (1.0 s ±0.1 s).
  Should this not be the case, the remedy depends on the type of dash pot:

- Dash pot with hole in the cylinder base:
  Rotate cylinder until the specified damping is attained.

- Dash pot with grub screw:
  Turn grub screw (hexagon-socket-head key 1.5 mm) until the specified damping is attained (turning in the grub screw increases the damping action).

- Dash pot with adjustable nozzle:
  Loosen locknut (wrench size 5.5 mm). Turn hexagon screw of nozzle (wrench size 5.5 mm) until the specified damping is attained (turning in the nozzle screw increases the damping action). Secure nozzle screw with locknut.

- Switch recorder off.
- Reinsert TAPE DECK CONTROLLER PCB.

3.3.5 Headblock

CAUTION
To avoid inadmissible magnetization of the soundheads, switch the recorder off before removing or installing the headblock!

Replacing the soundheads
Remove headblock cover (4 hexagon-socket-head cap screws, 2.5 mm).
Remove headblock after the 3 hexagon-socket-head cap screws (3 mm) have been unfastend.
The soundheads can be removed after the hexagon-socket-head cap screw (A), accessible from below, have been unfastened.

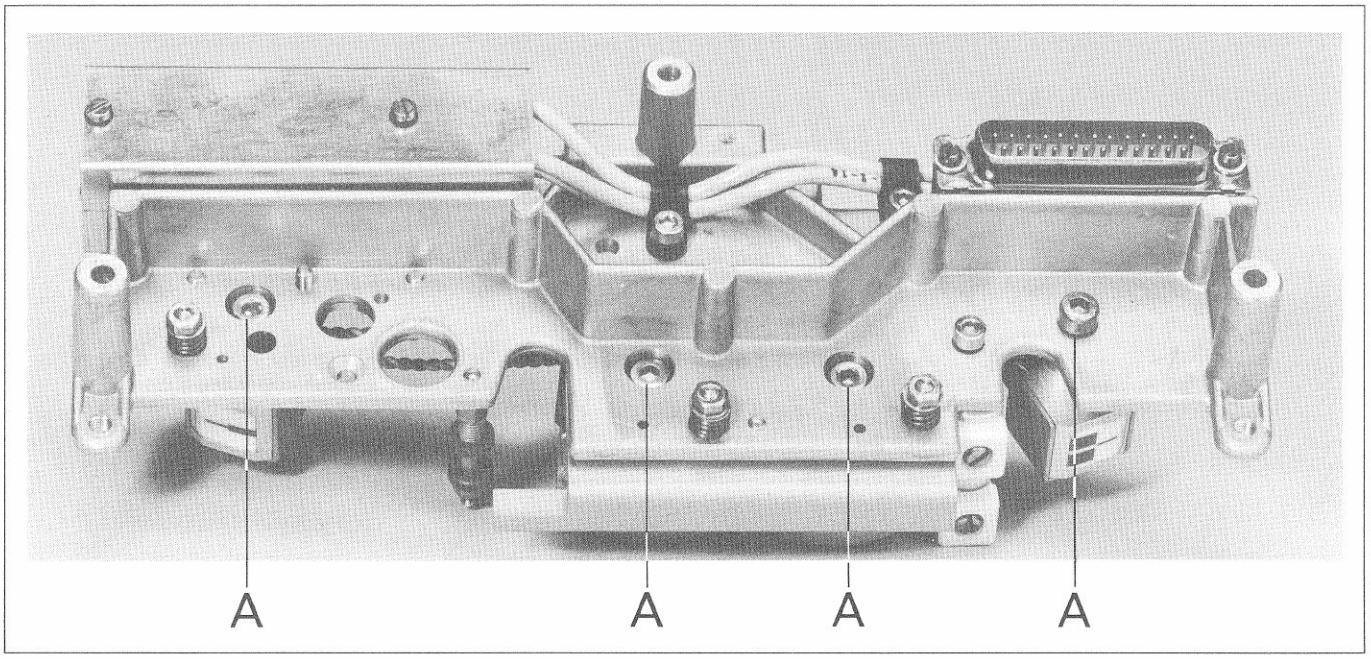

IMPORTANT

Do not shift the black azimuth alignment plate when replacing a soundhead. The distance between the head support and the head face is milled to the exact same dimensions. Adjustment of the head azimuth should, therefore, be unnecessary.

After the soundhead has been replaced, check with the tape path alignment gauge (part No. 10.010.001.17) that the head face is perpendicular and that the azimuth is correct.

For this check, the headblock and the gauge should be placed on a leveling block or in an emergency on a flat glass plate.

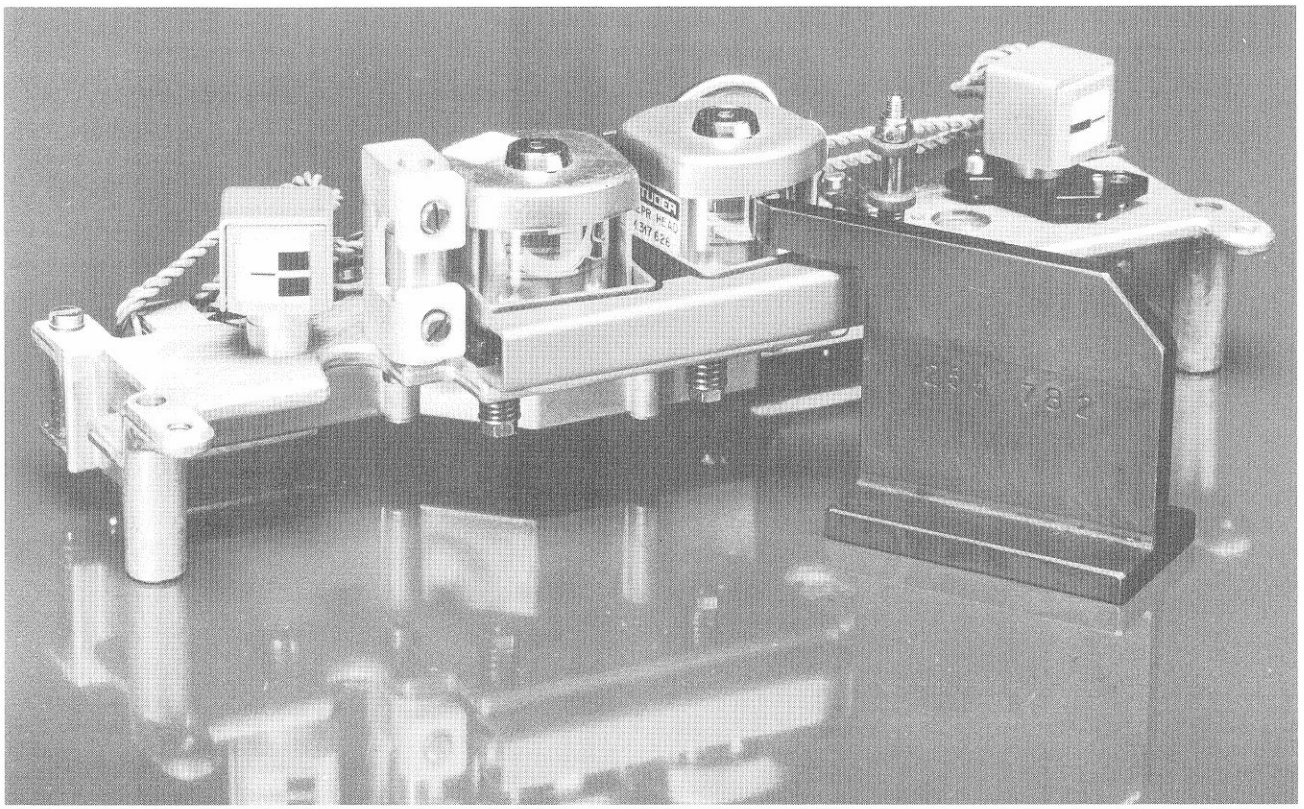

The azimuth alignment is described in Section 4.2.

Tape guidance

Check tape guidance {B} with the tape path alignment gauge (part No. 10.010.001.16). Adjust the height of the ceramic parts with a screwdriver for slotted-head screws.

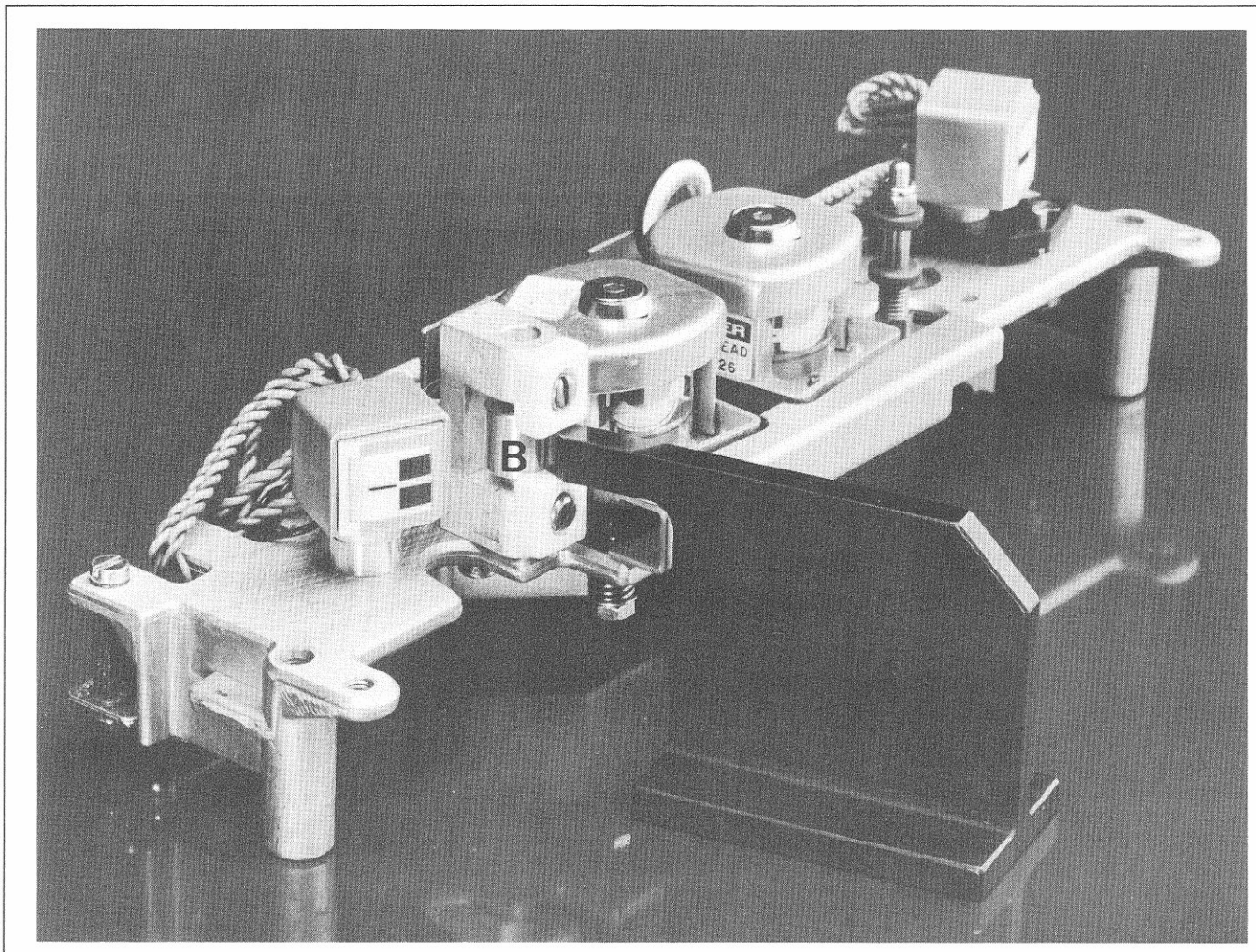

Anti-scrape flutter roller

The anti-scrape flutter roller can be removed after unfastening the 3 mm hexagon-socket-head cap screw accessible from below.

It is not necessary to check the height of the anti-scrape flutter roller after the roller has been replaced because this adjustment was made by the factory.

The mounting support for the anti-scrape flutter roller must be positioned parallel to the record head, otherwise insufficient space remains for the left-hand tape lift pin.

Check with the tape path alignment gauge (part No. 10.010.001.16) that the anti-scrape flutter roller is perpendicular on all sides.

3.4 ELECTRICAL ADJUSTMENTS

3.4.1 Checking the supply voltages

Remove upper rear panel (3.2.1). Four test points are marked on the basis board: +24 V, +15 V, -15 V, +5.6 V. The maximum deviation is ±100 mV for each. The +5.6 V can be adjusted with the trimmer potentiometer that is accessible from the rear on the stabilizer board.

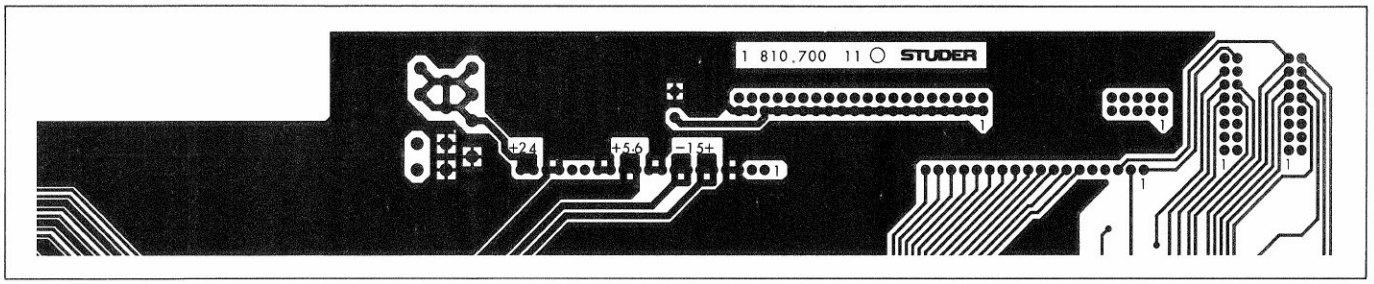

3.4.2 Tape tension sensors

Do not make any electrical adjustments to the tape tension sensors unless the basic mechanical adjustments according to Section 3.3 have been performed.

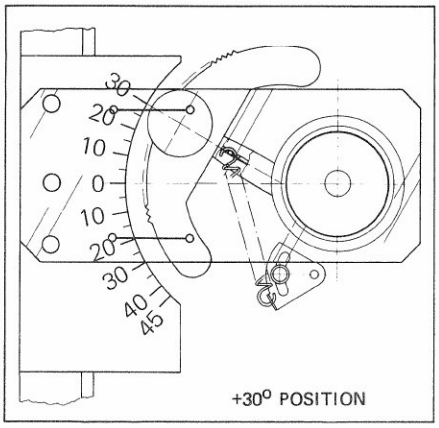

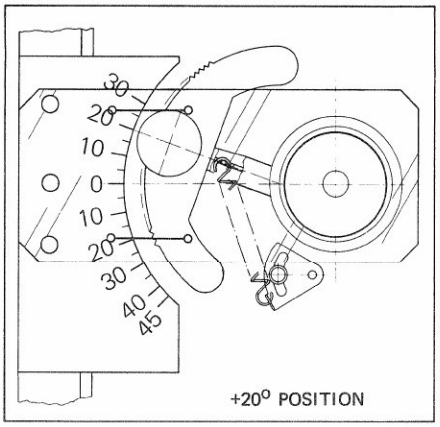

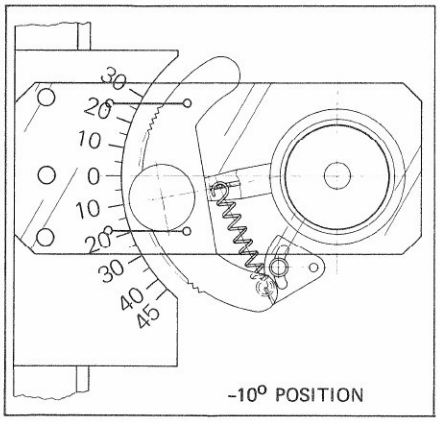

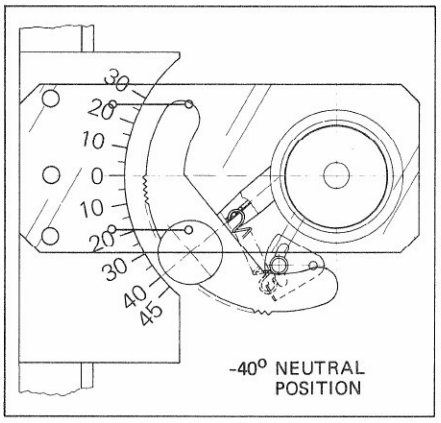

Neutral position:
With the tape tension sensors in neutral position, adjust the signals AN-TTL or AN-TTR (each on TP1 of the corresponding tape tension sensor) with R5 or R21 respectively to

0 V ± 50 mV

Max. deflection
The signals AN-TTL and AN-TTR (each measured on TP 1 of the corresponding tape tension sensor) are adjusted with R14 or R16 respectively to

4 V ± 50 mV

with the tape tension sensors in the 30° position (top edge of roller is flush with the top edge of the alignment gauge).

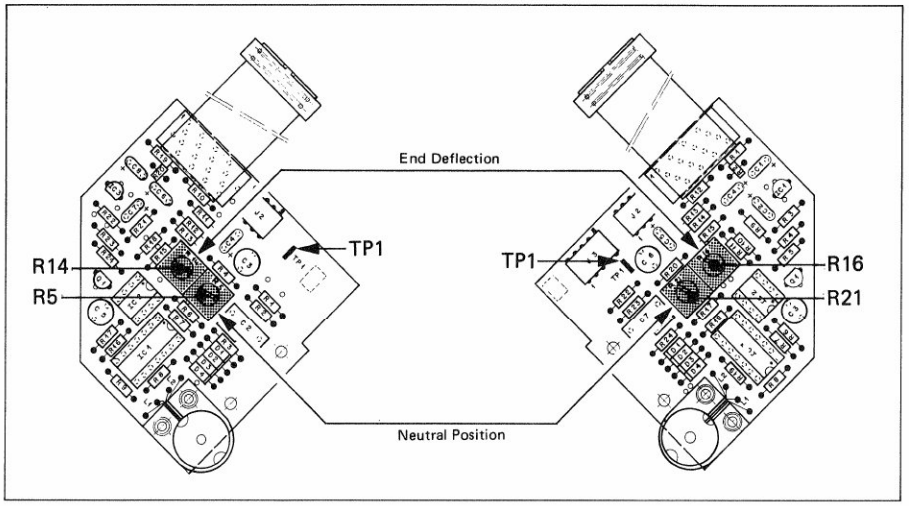

Neutral position:
Check and readjust if necessary; AN-TTL/R = 0 V ±50 mV.

Max. deflection:
Check and readjust if necessary; AN-TTL/R = 4 V ±50 mV.

Secure the setting of the trimmer potentiometers with a dab of locking paint (diam. 2 mm) after the adjustments have been made.

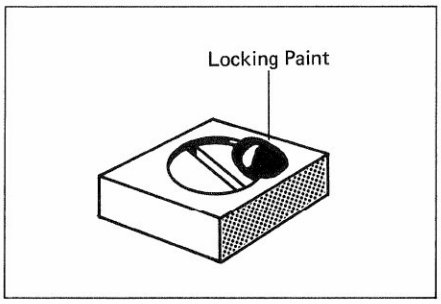

CAUTION:
Leave slots of trimmer potentiometers open.

3.4.3 Tape move sensor

Checking the TTL signals.

	CLOCKWISE	COUNTER–CLOCKWISE	TAPE DECK CONTROLLER
T-CLK 1	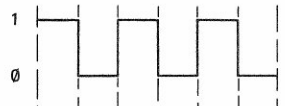	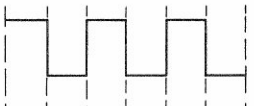	PIN 1
T-CLK 2	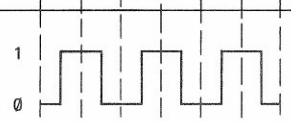	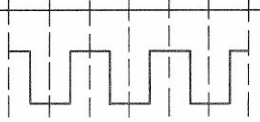	PIN 2

10 pulses per revolution.

Checking the tape counter:
The tape counter should increment and decrement correctly in all tape transport functions.
Manually stop the right-hand guide roller in PLAY mode. The tape counter should no longer increment and the recorder should enter the STOP function.
If not: check that the jumper JS3 on the TAPE DECK CONTROLLER is in the correct position.

3.4.4 Tape-end sensor

Switch recorder on, tape transport in STOP mode.
Both tape tension sensors in their neutral position. The EDIT solenoid of the brake chassis should drop out and the status lamp of the STOP key should flash.

Move left-hand tape tension sensor out of its neutral position. The EDIT solenoid of the brake chassis should pick up, the tape tension sensors should engage, and the STOP lamp should light up continuosly. Restore the tape tension sensor to the neutral position and perform the same check with the right-hand tape tension sensor.

3.4.5 Tape tension adjustments

Remove jumper JS3 on the TAPE DECK CONTROLLER PCB or plug it into position B.

PLAY tape tension

Mount the alignment gauges on the two tape tension sensors and mount a reel of tape (hub diameter 100 mm). Spool forward to the middle of the tape, select PLAY, and adjust the two trimmer potentiometers "PLAY" of the TAPE DECK CONTROLLER in such a way that both tape tension sensors are in the -10° position.

The adjustments can also be made with a measuring rod when the machine is flat on a bench and the hinged panel cover is open: the measuring rod can be pushed in below the hinged panel cover. On the left-hand tape tension sensor the distance between the bottom edge of the guide roller and the bottom edge of the tape tension sensor cover should be 50 mm (X); on the right-hand tape tension sensor the distance between the bottom edge of the guide roller and the top edge of the splicing rail should be 22 mm (Y).

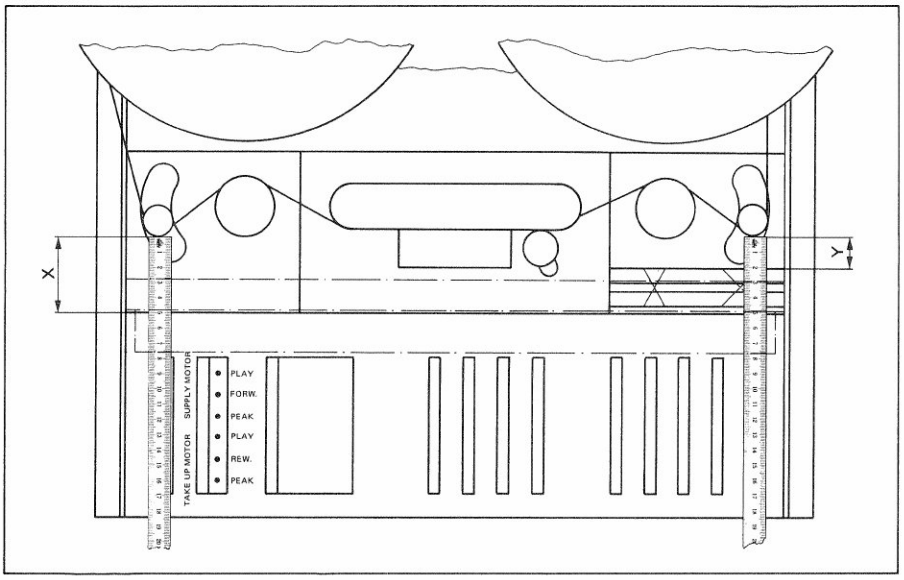

Back tension

Press fast forward > and adjust the left-hand tape tension sensor to -10° by means of the "FORWARD" trimmer potentiometer on the TAPE DECK CONTROLLER. Press rewind < and adjust the right-hand tape tension sensor to -10° by means of the "REWIND" trimmer potentiometer on the TAPE DECK CONTROLLER. Or use the measuring rod for adjusting the back tension analogously to the PLAY tape tension.

Peak tape tension

Rewind the tape to the beginning (right-hand hub diameter 100 mm). Manually keep the left-hand reel from turning and press fast forward >. Adjust the right-hand tape tension sensor to +20° by means of the "TAKE UP PEAK" potentiometer on the TAPE DECK CONTROLLER; or use the measuring rod, analogously to the adjustment of the PLAY tape tension, distance Y = 42 mm.

Spool tape forward to the end (left-hand hub diameter 100 mm). Manually keep the right-hand reel from turning and press rewind. Adjust the left-hand tape tension sensor to +20° by means of the "SUPPLY PEAK" potentiometer on the TAPE DECK CONTROLLER; or use the measuring rod, analogously to the adjustment of the PLAY tape tension, distance X = 70 mm.

Check measurements

Check PLAY tape tension with tentelometer. Insert tentelometer between the supply reel and the left-hand guide roller or the right-hand guide roller and the take-up reel.

Desired values: left: 0.6 ... 0.7 N (60 ... 70 p)
right: 0.8 ... 0.9 N (80 ... 90 p)

Important: The difference between the left-hand and right-hand tape tension must be 0.2 N (20 p)!

Should these values not be attained, the tape tension spring must be readjusted with the turnbuckle {A} (refer to Section 3.3.4, page 3/29).

After these adjustments have been made, the adjusting screw of the turnbuckle must be tightened and secured with a drop of locking paint.

Reinsert jumper JS3 on the TAPE DECK CONTROLLER PCB.

3.4.6 Capstan motor control

CAUTION

Ensure that proper electrical insulation and excellent thermal contact with the heatsink bracket is achieved when replacing the power transistors (Q1, Q2). Mica washers coated on both sides with heat-conduction paste are, therefore, essential! After installation check insulation with continuity tester or ohmmeter!

The capstan motor control requires realignment after the capstan motor or the capstan motor control has been replaced.
Completely remove capstan motor together with capstan motor control (3.2.9), do not disconnect connectors (flat cable, 2 blue stranded wires to the power transformer).

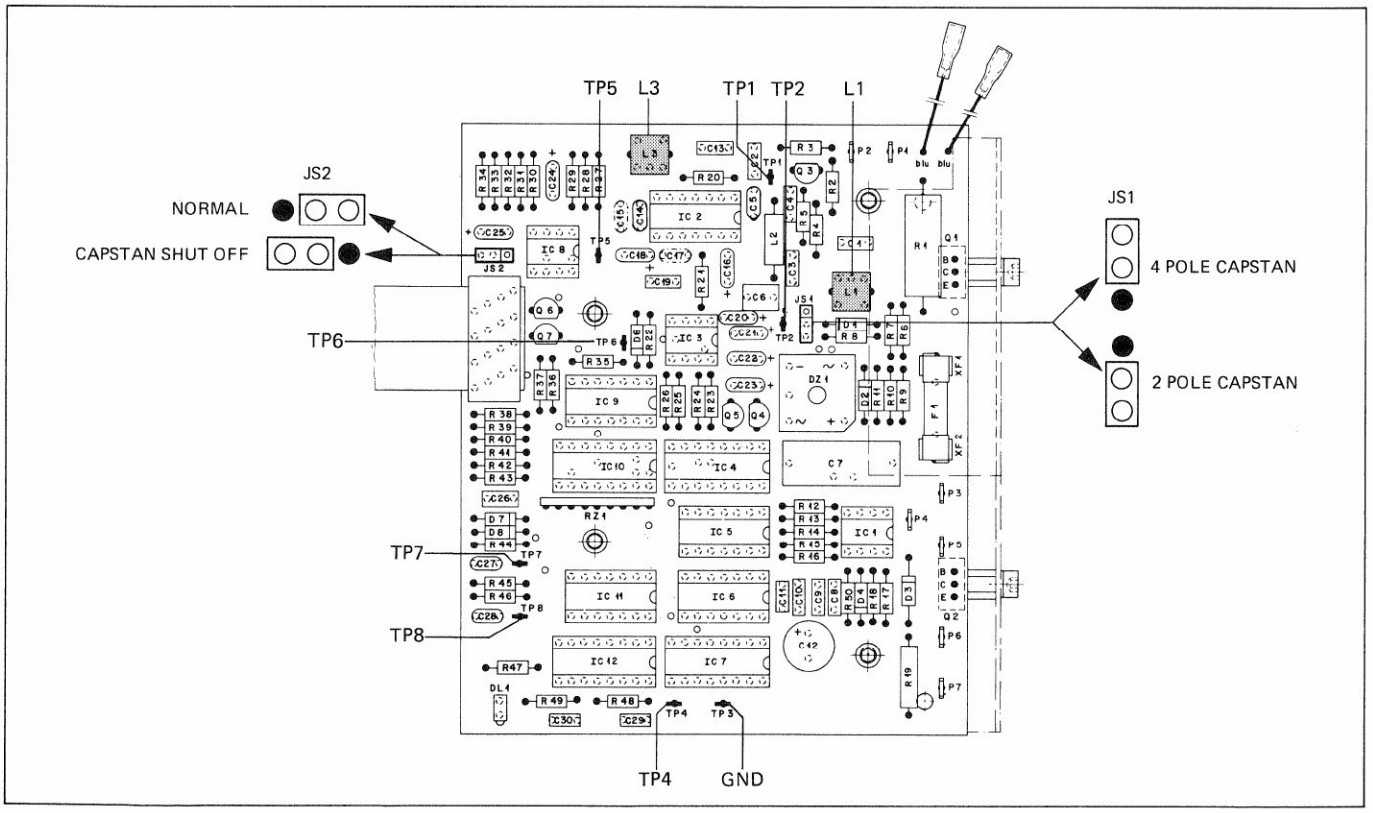

Adjustments

- Position jumper JS2 on capstan motor control so that the capstan motor switches off for TAPE OUT (CAPSTAN SHUT OFF).
- Bring both tape tension sensors into their neutral position.
- Switch recorder on, capstan motor should not rotate.
- Connect oscilloscope to TP1 of the capstan motor control, adjust signal with L1 to approx. 5.5 MHz ±500 kHz. The signal should not disappear when touching the insulation of the two twisted stranded wires that lead to the capacitive sensor.
- Move tape tension sensors out of their neutral position (or change the setting of jumper JS2 if this is preferred) so that the capstan motor rotates (capstan lock indicator on MASTER PANEL and LED DL1 on the capstan motor control board turn on as soon as the motor has reached nominal speed).
- Connect oscilloscope to TP5. Adjust audio signal (1600 Hz at 38 cm/s) with L3 for maximum amplitude (400 mV p/p ±200 mV p/p).

Check measurements

- TP7: square-wave signal, same frequency as signal on TP5, cyclic duty factor approx. 50%.
- TP8: reference signal from microprocessor; short positive pulses. Only available when motor is running!
- TP4: output signal of phase comparator; cyclic duty factor approx. 50% when motor is running without load, i.e. pressure roller not engaged. If capstan motor too fast: LOW, if too slow: HIGH.
- TP2: DC signal, mean value of signal on TP4. Approx. 7 ... 8 VDC when motor operates without load.

Excanging the capstan motor or the capstan motor control

- The capstan motor control 1.810.761 is designed for operation with an integral capacitive sensor, the control 1.810.766 for operation with a split capacitive sensor.

  If a capstan motor with integral sensor is replaced by one with a split sensor, the control board 1.810.761 should be replaced by a control board 1.810.766. It is not recommanded to operate the motor with split sensor in conjunction with board 1.810.761, although this is not impossible (capstan lock problems can occur when the motor runs without load, i.e. pressure roller not engaged).
  Both terminals of the capacitive sensor must be connected to P1 of the capstan motor PCB, and P2 to the chassis ground.
  It is not possible to operate the capstan motor with integral sensor in conjunction with the capstan motor control 1.810.766.
- If a 4-pole motor is replaced by a 2-pole motor, change the setting of jumper JS1 on the capstan motor control. Unplug the power transformer leads (2 x blu) from terminals 10 and 19 and connect them to terminals 12 and 17, and interconnect power transformer terminals 10 and 11 as well as 18 and 19. An additional screening plate 1.810.001.05 as well as 4 screws 21.53.0354 and lockwashers 24.16.1030 are required because the 2-pole motor has a stronger stray field. This screening plate is installed between the capstan motor and the amplifier cage and must be secured to the existing 4 hexagon bolts.
- The phase shift capacitor must be changed from 4.5 µF (part No. 59.99.0452) for 4-pole capstan motors to 8 µF (part No. 59.14.6809) for 2-pole capstan motors.

Centering the capacitive sensor

Remove the capstan motor but leave it connected to the machine for adjusting the capacitive sensor. The ring sensor can be adjusted with the two screws (B) after the four screws (A) have been lightly loosened. Connect oscilloscope to TP5 of the capstan motor control and adjust to minimum amplitude modulation (in practical terms: definition of the curve minima and maxima as sharp as possible).

Subsequently retighten the four screws (A) and secure all 6 screws with a dab of locking paint (ensure that no paint flows into the hexagon socket head!).

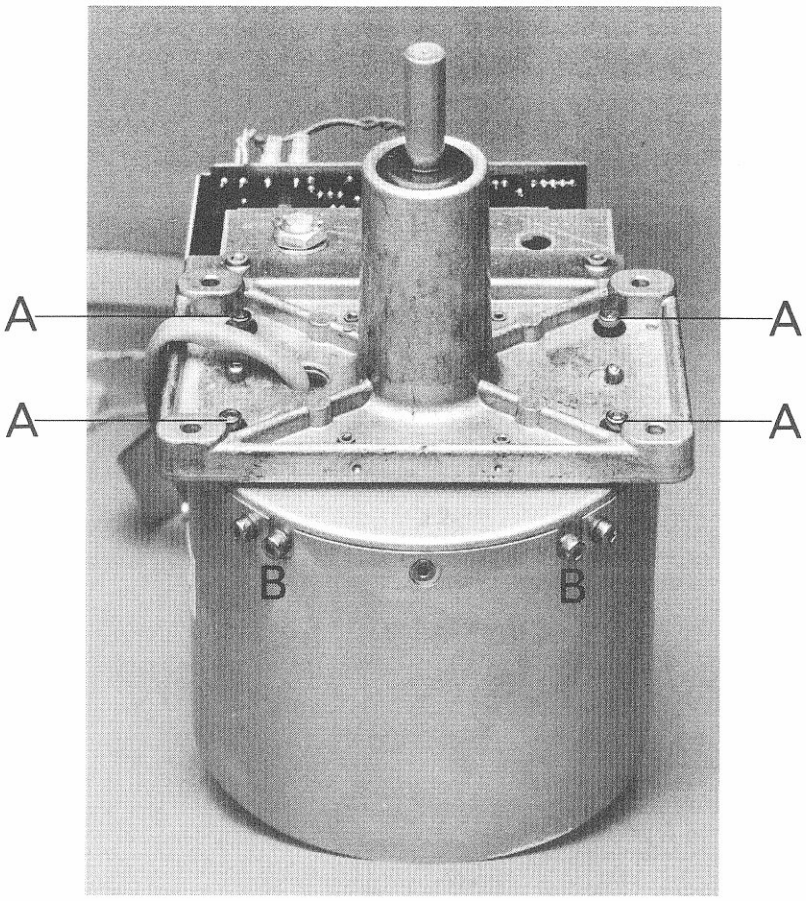

3.4.7 Spooling motor control

- Switch recorder off.
- Remove spooling motor control (3.2.8) and unscrew shock protection.
- Disconnect the two twisted stranded wires (0 V, blk; 130 V, red) on the power transformer terminals.
- Do not disconnect the leads of the spooling motors (P1 ... P4)! When the spooling motor control operates without load, C27 and L1 or C28 and L2 are resonant circuits through which high currents may flow!

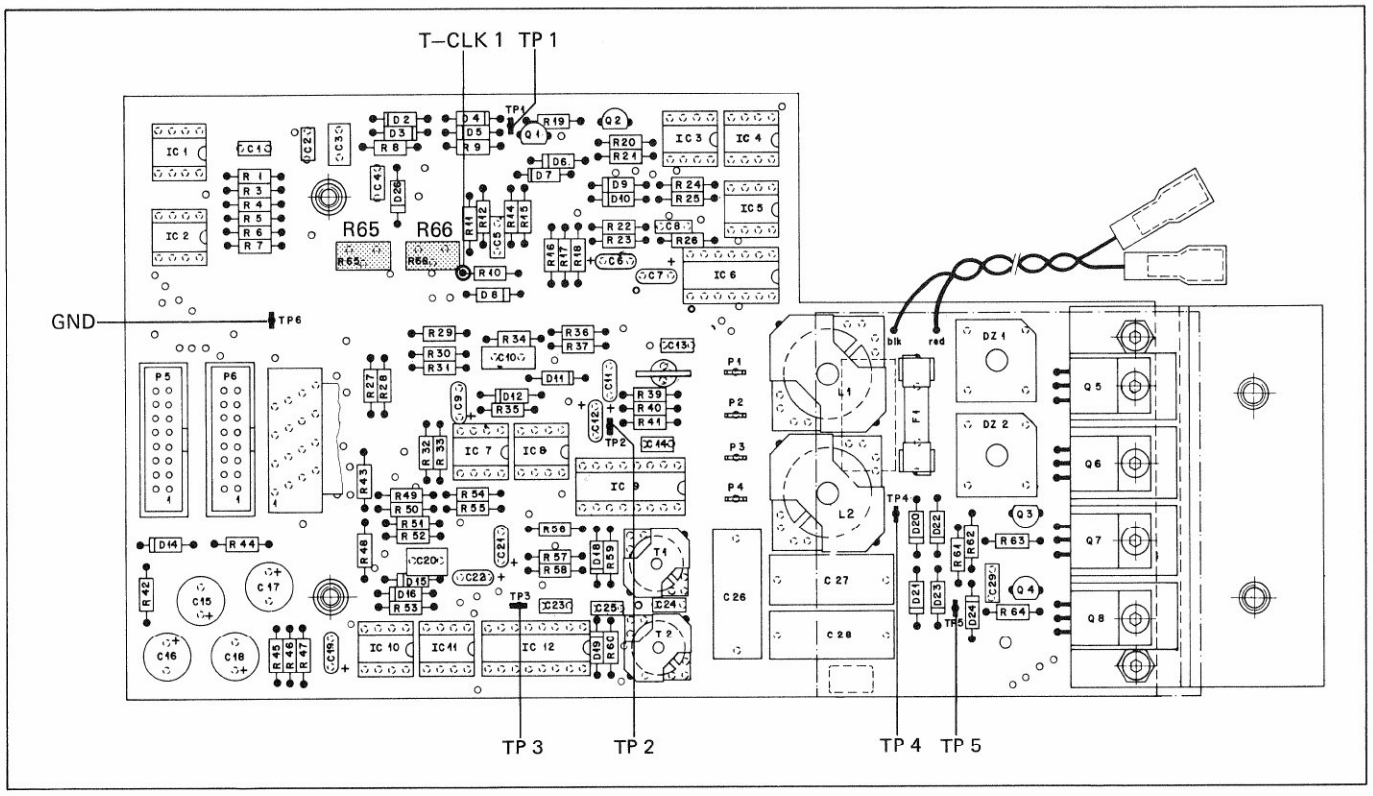

- Switch recorder on, connect oscilloscope to TP1. Balanced delta signal, 76 kHz, 10 V p/p. The DC component on TP1 should not exceed +150 mV.
- Switch recorder off, pull IC10 out of its base; interconnect terminals 7 and 8 on the base of IC10 with a piece of wire. Switch recorder on, connect oscilloscope to TP3, and measure cyclic duty factor of the square-wave voltage. Adjust to 95% with R65. Switch recorder off, reinsert IC10 into its socket.
- Perform the same measurements analogously with IC7 and TP2. If the cyclic duty factor on TP2 is greater than 95%, decrease it to 95% with R65.
- Switch recorder off. Reconnect power transformer leads (blk terminal 14, red terminal 15). Replace fuse F1 by a power resistor 100 Ω, > 10 W (part No. 1.010.001.14). Remove jumper JS3 on the TAPE DECK CONTROLLER PCB or plug it into position B. Mount tape, switch recorder on, and select PLAY mode.

CAUTION: Dangerous voltages are present on the spooling motor control board!

- Connect oscilloscope to TP4. A switched signal is measured that has a sinusoidal envelope curve. If the signal is unbalanced or if it has a DC component, this is caused by a defective commutating circuit (around Q3, 4, 7, 8).

CAUTION: If the measurements are made in the commutating circuit, replace fuse F1 by a series resistor (100 ohm) in order to prevent damage to the circuit!

- Connect oscilloscope to TP5 and perform the same measurements as above.
- After correct functioning has been ascertained, repeat the above 2 measurements without the series resistor (fuse F1 reinserted).
- Connect frequency counter to the terminal of R10 that is located nearer to the trimmer potentiometer R66 (signal T-CLK1). Select slowest spooling speed (STOP, TRANS <REDUCED> and < or >). Adjust frequency with R66 to approx. 85 Hz (or any other value if desired).
- Check with the other spooling speeds: STOP, < or >, TRANS <REDUCED> and < or >; frequency approx. 440 ... 470 Hz. Press < or >; frequency approx. 190 ... 210 Hz.
- Reinsert jumper JS3 on TAPE DECK CONTROLLER.

3.5 CIRCUIT DESCRIPTIONS

3.5.1 Power supply

Line voltages:
100, 120, 140, 200, 220, 240 V ±10%, 50 ... 60 Hz

Internal supply voltages
+5.6; +15; -15; +24; all stabilized
125 VAC for spooling motor control
130 VAC for 4-pole capstan motor control or
140 VAC for 2-pole capstan motor control

The line voltage is taken from the 3-pin power inlet (GR 01) through the 2-pole power switch (GR 02), the line filter (GR 03), the line voltage selector with the primary fuse (GR 04) to the power transformer (GR 05).

The secondary side of the power transformer supplies the following voltages: 25.6 V; 35.2 V; 130 V; 125 V; 10 V.

The 25.6 V and the 35.2 V are rectified and smoothed (GR 06) and produce the stabilized voltages +5.6 V, +24 V and ±15 V on the stabilizer circuit board (GR 07).

3.5.2 STABILIZER GR 07

+5.6 V Stabilizer
The supply voltage for the microprocessor is generated by a switching regulator with pulse width modulation. The controlling element is IC6 (regulating pulse width modulator) with built-in reference voltage source, oscillator, error amplifier, and current limiting circuit. The output of IC6 controls the two power transistors Q4 and Q3. The circuit elements Q6, 9, 10, 12, and 13 switch the regulator off as soon as the input voltage drops below approx. 8 V in order to prevent destruction of the series transistor Q4 because of instabilities. The output voltage can be adjusted to 5.6 V with R69.

Triac Q11 short-circuits the output (current limiter of the controller responds; if the latter is defective the 25.6 VAC fuse F1 blows), if the output voltage rises above approximately 7 V because of a defect in the circuit.
The output current is limited to approximately 7 A. R58 is the current measuring resistor.

24 V Stabilizer
The +24 V are created from the rectified 25.6 VAC by IC3 which is a voltage regulator with a fixed setting.

±15 V Stabilizer
The ±15 V are produced from the rectified 35.2 VAC by means of the voltage regulators with fixed setting IC1, IC2. The output currents of the two regulators are identical.
Should a defect occur that causes an increase in the output voltages, the triac Q5 short-circuits the output (the current limiter of the controllers responds; if the latter are defective the 35.2 VAC fuse F2 blows).

Monitoring the supply voltages

The circuit with IC4 monitors the availability of the stabilized supply voltages. If one of the voltages fails or drops below approx. 70% of the nominal value, the signal T-SUPVON becomes 0. This sets up an interrupt in the microprocessor and tape braking is activated immediately. At the time the recorder is switched on, the signal T-SUPVON must be 1 before the microprocessor enables the functions of the tape recorder.

Monitoring the line voltage

Line voltage failures of less than 80 ms do not influence the logic state of the recorder. Correct switching to STOP mode is ensured for longer failures.

A pulsating DC voltage is tapped on the 25.6 V rectifier (ACB-25.6 and STABIN-6). C12 in the circuit with IC5 is charged by R34, R27 and periodically discharged by the pulsating DC voltage. As soon as a half-wave is missing (10 ms at 50 Hz, 8.33 ms at 60 Hz), the signal T-PWRON becomes 0 and sets up an interrupt in the microprocessor and tape braking is automatically initiated after 80 ms.

3.5.3 MP UNIT GR 20 EL 01

1.810.752/1.820.780 [specifications that differ for 1.820.780 are indicated in brackets]

The MPU logic processes the entered commands into logical signals and stores the audio parameters, locate addresses, and, when the recorder is switched off, also the last operating state. The operating time of the tape transport can be read out on the operating hours meter.

The clock frequency of the microprocessor is also the central timing source for the recorder:
Capstan motor control, switched spooling motor output stage, audio, time code.

Bus and select lines lead to:
- Tape deck controller
- Audio controller
- Command unit
- Serial remote controller

The TTL MPU bus features 8 data and 3 address lines as well as separate select lines to the individual controllers.

Microprocessor

The MC 6803 is a bidirectional, bus-oriented 8-bit parallel microprocessor with 16 address bits. It is implemented in NMOS technology, is TTL compatible, and requires only one supply voltage (+5 V).
Seven different addressing methods are possible and its internal command register can decode 72 commands.

The internal 128 byte RAM is not used for the present application and is ignored by the program. Up to 64 K external memory can be addressed with the 16 address bits.

In the operating mode selected (EXPANDED MULTIPLEXED MODE No.2), PORT 3 (Lines P30 ... P37) operate as a time-division address/data bus.

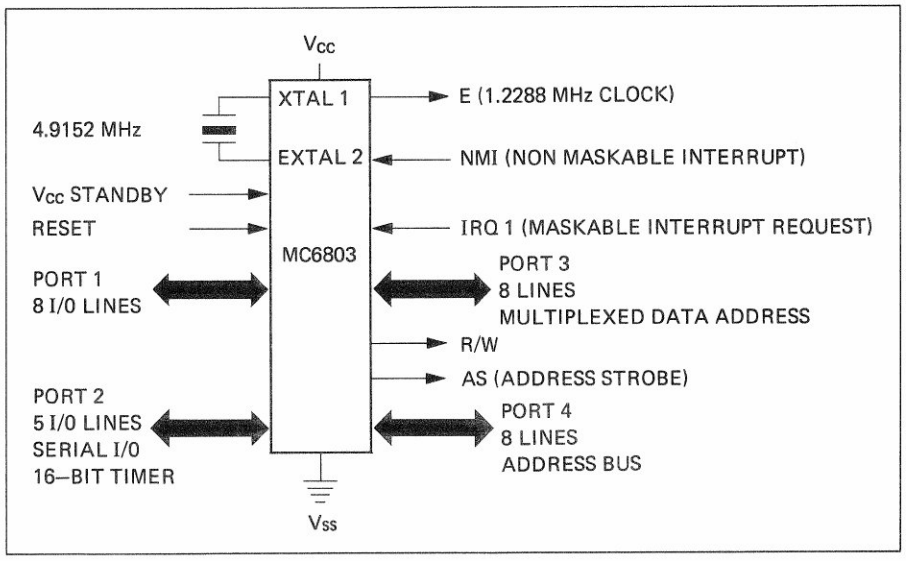

The internal clock frequency is 1.2288 MHz which is derived from the 4.9152 MHz quartz frequency by dividing it by 4.

External memories

The external memories comprise 16K PROM (IC3 ... IC6) and 2K RAM (IC2) [24K PROM (IC8, IC10, IC12, IC14) and 2K RAM (IC6)] as well as a recargeable buffer battery BA1. The battery is charged by the +5.6 supply voltage and feeds the RAM when the recorder is switched off.

The complete machine program is stored in PROM. The RAM stores the audio data, the tape timer information, the selected command, the locate address, and the tape transport status. The R/W signal (READ/WRITE) determines wether data is sent from the microprocessor to the RAM (WRITE) or is received from the RAM (READ).

IC14 [IC11] (OCTAL TRANSPORT LATCH WITH 3-STATE OUTPUTS) is the address interface for PORT 3 (Address bits 0 ... 7) and is controlled by AS (ADDRESS STROBE).
When E = 0 and AS = 1, PORT 3 is an address bus; with E = 1 and AS = 0 it is a data bus.

In contrast to address bits 0 ... 11 which are primarily used for addressing the memories and for the address bus of the tape recorder, address bits 12 ... 14 in IC10 (1-OF-8 DECODER/MULTIPLEXER) [address bits 12 ... 15 in IC9 (1-OF-16 DECODER/DEMULTIPLEXER)] generate the information for the selected lines of the PROMs and the controllers.

IC1 [IC3] (OCTAL BUS TRANSCEIVER WITH 3-STATE OUTPUTS) establishes the connection to the 8-bit MPU data bus. IC7 [IC2] (OCTAL BUFFER/LINE DRIVER) places the address and select bits on the MPU address/select bus. IC1 [IC3] is controlled by R/W, address bits 11, 14, 15 and the MPU clock [R/W, address bits 14, 15 and the MPU clock]. IC7 is controlled by address bits 11, 14, 15 [IC2 by address bits 14, 15].

The clock frequency of 1.2288 MHz is divided down in IC13 [IC5] (DUAL DECADE COUNTER) to the following frequencies:
:4 = 307.2 kHz (reference frequency for HF driver, erase and bias frequency)
:16 = 76.8 kHz (clock frequency for spooling motor output stage)
:128 = 9.6 kHz (reference frequency for capstan motor control)

RESET

The RESET input fulfils two functions:

- Clean initialization during power-on of the microprocessor; the RESET input must be kept below 0.8 V until the supply voltage V/CC has reached at least 4.75 V so that the internal clock generator (Clock) can stabilize during this time.
- If the microprocessor does not function correctly, reinitialization is performed either with switch S1 or automatically, and the program is restarted. An automatic RESET is initiated if no tape timer scan occurs within approx. 20 ms (also refer to 3.5.4 TAPE DECK CONTROLLER).

During the power-on sequence, the RESET input must be kept low for at least 8 cycles of the internal clock frequency (min. 6.5 µs). The program counter is loaded with the last two addresses (FFFE, FFFF) during this time. The program starts with the first instruction two cycles after a positive voltage (log. "1") is available on the RESET input.

INTERRUPT

An INTERRUPT routine is initiated if a line voltage failure is detected by the power supply (T-NM [T-PWRON] = 0). The current instruction is completed before the INTERRUPT routine starts. The momentary operating status is stored in RAM and a STOP command is output to the TAPE DECK CONTROLLER after 80 ms. If the line voltage failure is shorter than 80 ms, the INTERRUPT routine is cancelled and normal program execution continues.

Only the NMI (NON-MASKABLE INTERRUPT) rather than the T-IRQ (MASKABLE INTERRUPT REQUEST) is used.

T-TX (send line) and T-RX (receive line) lead to the serial interface.

The output P20 is taken via IC8 (IC4) as the signal T-DRVENB to the serial remote controller and switches the latter's output on.

The new version of the MPU board 1.820.780 supports the following additional features:

- Either LED OR LCD tape timer display (selectable with jumper on the TAPE DECK CONTROLLER)
- Automatic MUTING during spooling operations.
- Display of the recorder status on the connected terminal (with DST command).

3.5.4 TAPE DECK CONTROLLER GR 20 EL 02

1.810.750

Set point generator for spooling motor control with 2 x 3 trimmer potentiometers. Controls the tape deck solenoids (brake, 3 x EDIT, pinch roller, and tape lifter).
Reading the tape deck status.
Data for capstan motor control.
Interpreting the tape move sensor signals.

Spooling motor control GR 24

Analog servo loop comprising: tape tension sensors GR 27/GR 28, spooling motors GR 09/GR 10, motor control with pulse-width modulation (clock frequency supplied by MPU).

The TAPE DECK CONTROLLER supplies the following information:
Set point for tape tension left and right (analog) for PLAY, spooling and PEAK. Reduced spooling speed (2 bits each for tape speed and spooling speed). Transmitting the tape movement and direction to the MPU. Driving the solenoids.

Capstan motor control GR 26

2nd order phase-locked loop (PLL), quartz reference 9.6 kHz from MPU, speed change-over through frequency division.

Capacitive tacho sensing. DC braking when switching to low speed or in vari-speed mode.

4-pole capstan motor for 3.75, 7.5, 15 ips
2-pole capstan motor for (3.75), 7.5, 15, 30 ips

Tape move sensor GR 28 EL 05

The tape move sensor supplies two square-wave voltages (T-CLK1, T-CLK2) that are offset by 90°. Their frequency is proportional to the tape speed. The diameter of the guide roller has been dimensioned so (37.9 mm) that a tape speed of 3.75 ips results for a frequency of 8 Hz. The following pulse rates are thus obtained:
3.75 ips: 8 pulses/sec.
7.5 ips: 16 pulses/sec.
15 ips: 32 pulses/sec.
30 ips: 64 pulses/sec.
The signal T-CLK1 is buffered and is available as TO-CLK on pin 7 of the connector for the parallel remote control.

	CLOCKWISE	COUNTER–CLOCKWISE	TAPE DECK CONTROLLER
T - CLK 1	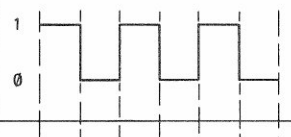	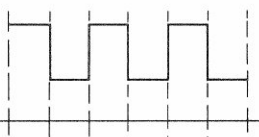	PIN 1
T - CLK 2	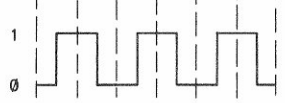	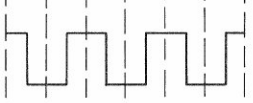	PIN 2

From the 90° offset square-wave signals of the tape move sensor, direction-dependent pulse trains are formed via IC2, IC3, IC4 which are stored in the two binary counters IC11, IC12 (max. 255 pulses). The counter outputs are connected through a buffer/driver (IC10) to the data bus. The microprocessor requests a tape timer scan in intervals of 20 ms and receives the data bits available on the data outputs of IC10.

An address decoder IC13 (1-OF-8 DECODER/DEMULTIPLEXER) decodes the address output by the microprocessor when the signal T-TDSTR (TAPE DECK CONTROLLER STROBE) is 0. The data outputs of IC10 are enabled with T-RW (PROCESSOR READ/WRITE) = 1, and the microprocessor receives the stored data.

The following logic status must exist on the address decoder so that the microprocessor can receive the content of the tape timer:
T-TDSTR = 0
T-RW = 1
T-ADRX = 0
T-ADRY = 0
T-ADRZ = 1
TDOR4-R thus becomes 0 and enables the buffer/driver IC10.

Microprocessor data (commands) are transmitted with T-RW = 0.

The following logic states must exist on the address decoder so that the microprocessor can reset the binary counters:
T-TDSTR = 0
T-RW = 0
T-ADRX = 0
T-ADRY = 0
T-ADRZ = 1
TD04-W thus becomes 0 and resets the counters IC11, IC12.

IC14 (OCTAL D-TYPE FLIP-FLOP) with the address TD07-W = 0 decodes the commands that have been output by the microprocessor through the data bus for the spooling motor control such as:
Play, fast forward, rewind, and stop, as well as 2 information bits for the spooling speed:

Tape speed	max.	7	4	1	m/s
T-TPSPD1	0	1	0	1	
T-TPSPD2	0	0	1	1	

Both bits are reset to 0 (10 m/s) by switching off TRANS or with STOP and PLAY.

IC9 with the address TD06-W = 0 decodes the commands output by the microprocessor for the six tape transport solenoids (control through open-collector drivers IC5 ... IC8) and the information for the capstan motor control:
T-CAPON = 0 (capstan motor control on)
T-REFSEL = 0 (capstan motor controlled by external reference frequency; 9.6 kH corresponds to the nominal speed set with the 2 bits T-SPDSL1, T-SPDSL2).
T-SPDSL1, 2 determine the tape speed:

Tape speed	30	15	7.5	3.75	ips
T-SPDSL1	0	0	1	1	
T-SPDSL2	0	1	1	0	

Through the buffer/driver IC1 with the address TD05-R = 0, the following information is received by the microprocessor in addition to the tape travel direction:
T-SUPVON (supply voltage monitoring, "1" = all on)
T-SYNCAP (capstan motor speed, "0" = syncronous running)
T-TENDL/R (limit switch of tape tension sensors, "0" = neutral position)

The multivibrator IC18 monitors the correct functioning of the microprocessor: the tape timer is scanned in intervals of approx. 20 ms with the address TD04-R = 0. The same signal is also used to trigger the monostable multivibrator IC18. If no timer scan occurs, the output 2Q of IC18 switches the signal T-RESET to "0". This causes a RESET in the microprocessor, i.e. the program is restarted.
Through the output 1Q of IC18, the RESET pulse also resets the two 8-way D-flip-flops IC9 and IC14 and the machine is switched to STOP mode.

3.5.5 BUS CONVERTER GR 20 EL 05

1.810.754

TTL/CMOS bus converter, (CMOS bus with 8 data and 4 address bits). Interface for audio section, transmits only data from the microprocessor to the audio section ("WRITE" only).
The audio parameters output by the MPU are written into the audio amplifiers through the TTL data bus, the bus converter and the CMOS bus.

- With 8-way D-flip flop:
  Input and output level 0, 4, 8, or 10 dBm
  Change-over INP, SYNC, REP
  Muting MUTE
  Equalization 3180 µs
  Erase current
  Drop-in or drop-out

- With 8-bit digital/analog converter (256 step attenuator):
  Reproduce level
  Reproduce frequency response (treble, bass)
  Reproduce equalization
  Record level
  Record frequency response (treble)
  Record equalization
  Bias current

The bus converter essentially consists of the interface circuit IC5 (PERIPHERAL INTERFACE ADAPTER = PIA) and the CMOS bus drivers IC4, 5, 8.

MPU signals to the PIA:
- Data bits: T-DATA-0 ... T-DATA-7 (MPU bus TTL).
- T-ENB: MPU clock frequency, 1.2288 MHz.
- T-RW: The data transmitted by the MPU can placed on the CMOS bus by the PIA when READ/WRITE = 0.
- T-RESET: all register bits of the PIA are set to 0 when this signal is = 0.
- T-ACSTR: (AUDIO CONTROLLER STROBE) = 0 and T-ADR-Z = 0 enable the PIA.
- T-ADR-X and T-ADR-Y address the internal registers of the PIA.

Output signals of the PIA:
- CA-DATA 0 ... CA-DATA 7: 8-bit CMOS data bus.
- CA-ADR-R, S, T, U: 4-bit CMOS address bus.
- CA-CHSO1, O2, TC: channel selection 1, 2, and time code channel.
- CA-MONO: mono/stereo switch ("0" = mono).

Stand-by signals (TTL) from: CH1, CH2, time code (recording) and mono/stereo switch are transmitted through IC1 (3-STATE HEX BUFFER) to the PIA and received by the microprocessor.

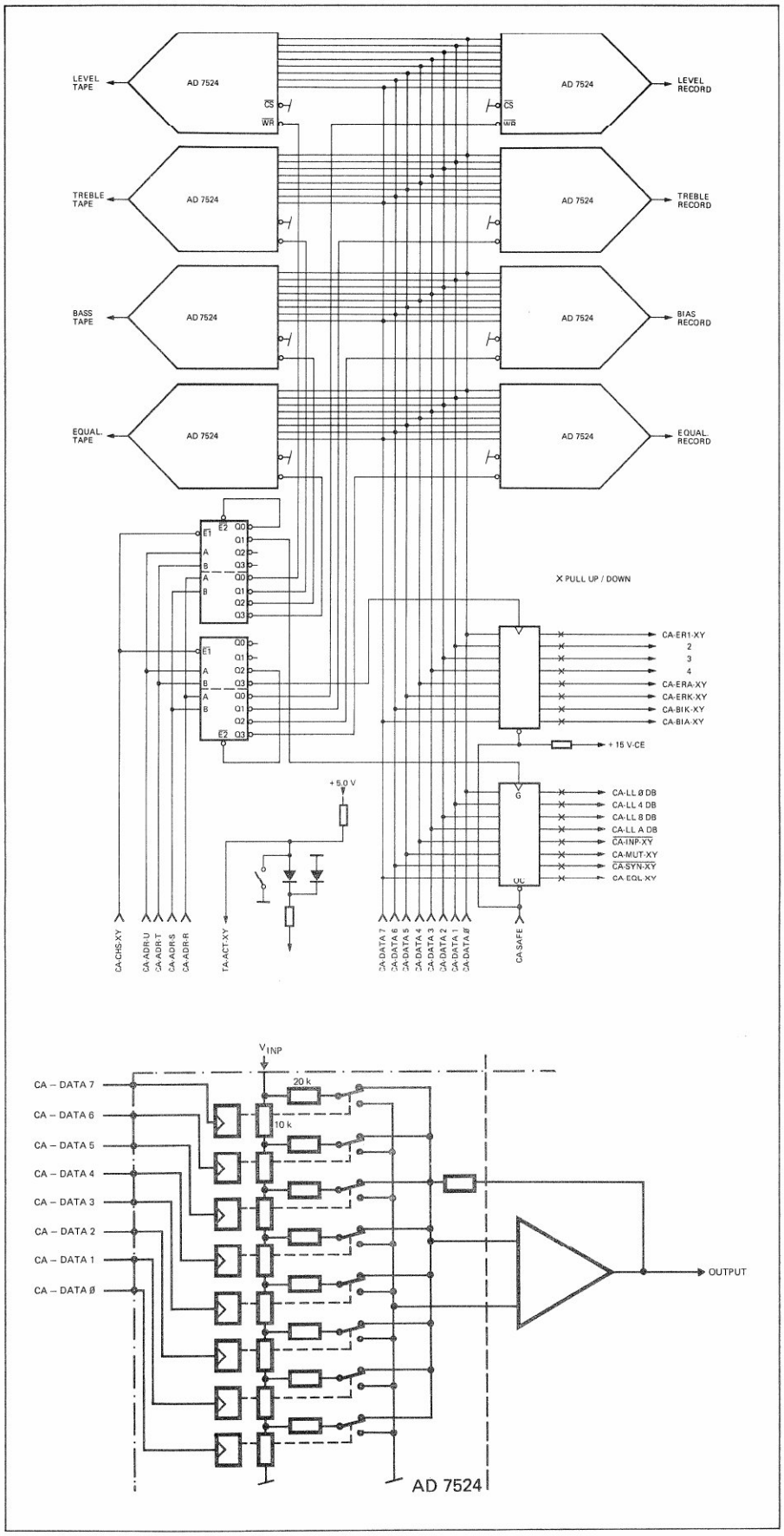
LEVEL TAPE
AD 7524
LEVEL RECORD
TREBLE TAPE
TREBLE RECORD
BASS TAPE
BIAS RECORD
EQUAL. TAPE
EQUAL. RECORD
X PULL UP / DOWN
CA-ER1-XY
2
3
4
CA-ERA-XY
CA-ERK-XY
CA-BIK-XY
CA-BIA-XY
+ 15 V-CE
+ 5.0 V
CA-LL Ø DB
CA-LL 4 DB
CA-LL 8 DB
CA-LL A DB
CA-INP-XY
CA-MUT-XY
CA-SYN-XY
CA-EQL-XY
CA-CHS-XY
CA-ADR-U
CA-ADR-T
CA-ADR-S
CA-ADR-R
TA-ACT-XY
CA-DATA 7
CA-DATA 6
CA-DATA 5
CA-DATA 4
CA-DATA 3
CA-DATA 2
CA-DATA 1
CA-DATA Ø
CA-SAFE
V INP
20 k
10 k
CA – DATA 7
CA – DATA 6
CA – DATA 5
CA – DATA 4
CA – DATA 3
CA – DATA 2
CA – DATA 1
CA – DATA Ø
OUTPUT
AD 7524

3.5.6 PERIPHERY CONTROLLER GR 20 EL 04

1.810.753

The PERIPHERY CONTROLLER is the interface to the serial TTL bus (1 serial data bit per peripheral device; 3 address bits; 1 READ SELECT line, and 1 WRITE SELECT line).

Bus and address lines lead to the following units:
- Audio controller keyboard; input section for audio parameters.
- Channel control unit CH1; keys and status indicator lamps, channel 1.
- Channel control unit CH2; keys and status indicator lamps, channel 2.
- Channel control unit CH3; keys and status indicator lamps, time code channel.
- Master panel; keys and status indicator lamps for tape speed, mono/stereo switch (or tape type selector), and CCIR/NAB equalization.
- Remote interface; interface to parallel remote control.

The periphery controller essentially consists of an interface circuit (PERIPHERY INTERFACE ADAPTER = PIA).

MPU signals transmitted to PIA:
- Data bits: T-DATA-0 ... T-DATA-7 (MPU bus TTL).
- T-ENB: MPU clock frequency, 1.2288 MHz.
- T-RW: The data sent by the MPU can be placed on the serial TTL bus with READ/WRITE = 0; with READ/WRITE = 1 the MPU can receice data bits from the PIA.
- T-RESET: all register bits of the PIA are set to 0 when this signal is = 0.
- T-ACSTR: (AUDIO CONTROLLER STROBE) = 0 and T-ADR-Z = 1 enable the PIA.
- T-ADR-X and T-ADR-Y address the internal registers of the PIA.

Peripheral lines of the PIA:
- Seven (+ 1 spare) serial I/O data lines (channel controls, master panel, remote interface).
- DATA ENB (OUTPUT).
- DT JMP, DT ACK1, 2; data lines of the input unit for the audio parameters (INPUT).
- A, B, C; address lines (OUTPUT).
- READ, WRITE.

Input section for audio parameters (1.810.755):
The input section comprises 11 keys, 13 inductor lamps, and 8 code switches. The audio parameters are programmed with the keys, the indicator LEDs are used for status indication. The code switches fulfil the following functions:

1, 2: Changeover of the erase current for full-track, 2-track, and 2-track with time code, as well as delay time for sequential drop-in and drop-out.
3: Implementing the track and output selection individually for each audio channel or for both channels in parallel.
4: Spare
5, 6: Setting the line levels for inputs and outputs.
7: The same audio parameters apply to CCIR and NAB equalization if this switch is set.
8: Enables the input section.

The 11 keys are connected via IC3, 4 (8-INPUT MULTIPLEXER to the serial TTL bus.
Example: when the STORE button is pressed, the input D4 (IC4, PIN 5) changes to 0. In order to transmit this information to the line DT ACK2, the address bits must be A = 0, B = 0, C = 1, and READ = 0. As a result DT ACK 2 changes to 0 and IC4 is activated.
T-RW must also be set to 1 so that the microprocessor can receive this information from the PIA.

The pilot lamps are controlled via IC7, IC8 (ADDRESSABLE PERIPHERAL DRIVER). To acknowledge the STORE command, for example, T-RW must be 0 (PIA transmits data sent by the MPU); DT ACK2 must be 1 on the data input D (IC8, PIN 13).
The STORE lamp is turned on with WRITE = 0 and the address bits A = 0, B = 1, C = 0. IC7, IC8 have open-collector Darlington outputs.
When WRITE = 1, the output states of IC 7, IC 8 remain latched. The pilot lamp is switched off with the address A = 0, B = 1, C = 0 and WRITE = 0, as well as DT ACK2 = 0.

The code switches are connected through IC5 (8-INPUT MULTIPLEXER WITH 3-STATE OUTPUT) to the serial TTL bus.

Example: S8 must be switched on for programming the audio parameters (S-AKBENA = 0). To enable transfer of this information to the line DT JMP, the address bits must be A = 1, B = 1, C = 1, and READ = 0, resulting in DT JMP = 0.

Audio command bus:
The peripheral device lines of PIA are connected through IC2 (OCTAL BUS TRANSCEIVER) to the bidirectional audio data bus. The address lines are connected through IC1 (OCTAL BUFFER/LINE DRIVER WITH 3-STATE OUTPUT) to the audio address bus.

The MPU receives the information of the track mode selectors (SAFE/READY), the SAFE/READY switch of the time code channel, the output selectors (INP, SYNC, REC), as well as the switches of the master panel through the audio command bus, the PIA, and the MPU-TTL bus.
The switches are connected through multiplexers (8-INPUT MULTIPLEXER WITH 3-STATE OUTPUT) to the corresponding bus lines.
The MPU sends the commands for the status indicator lamps through the MPU TTL bus, the PIAs, and the audio command bus to the lamp drivers (ADDRESSABLE PERIPHERAL DRIVER).

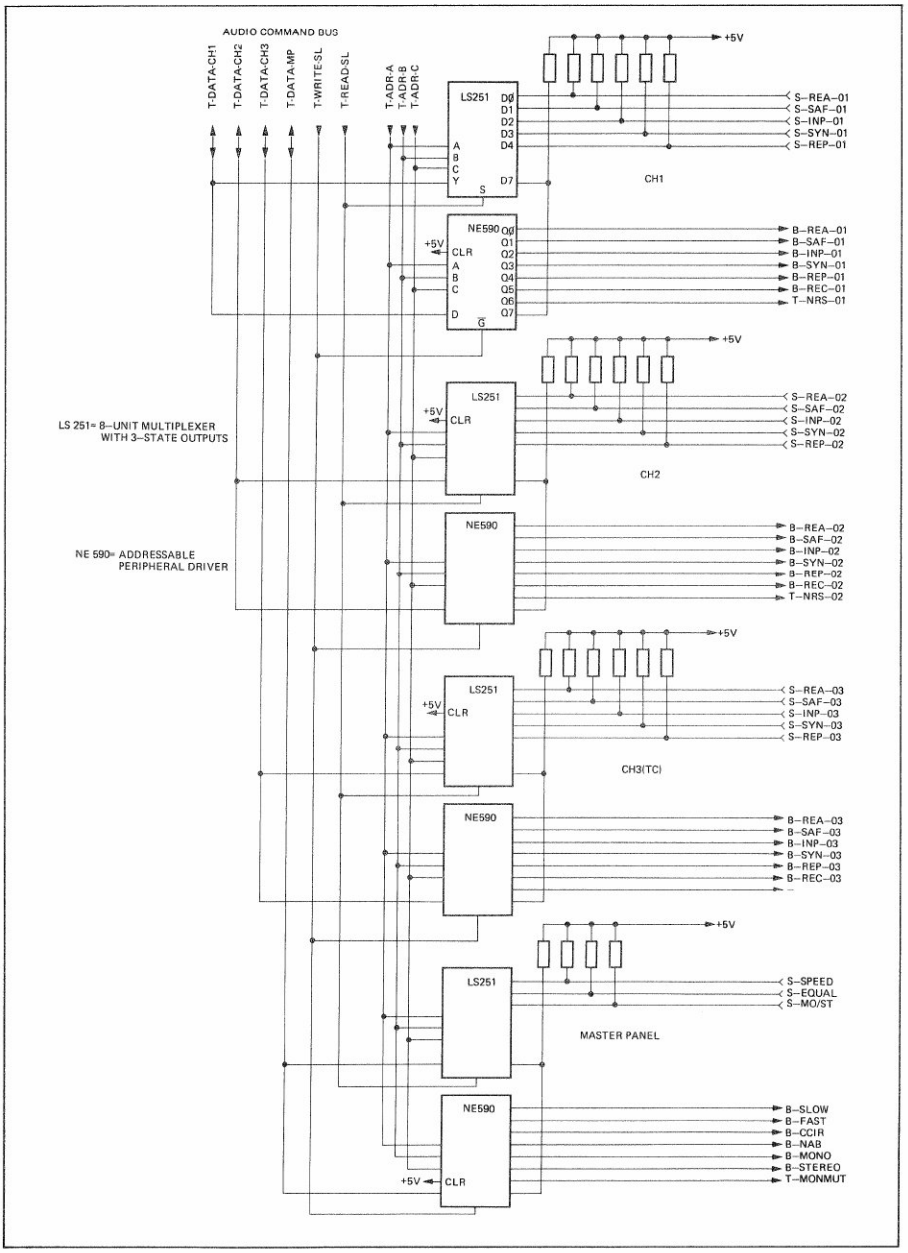

Remote interface GR 23 (1.810.738):
The interface of the parallel remote control is connected to the PIA of the periphery controller via the audio command bus. The corresponding data lines are T-DT-RP1, 2. The data line DT-SJM is connected to IC9 (8-INPUT MULTIPLEXER WITH 3-STATE OUTPUT). The inputs of IC9 are programmed by SZ1/1...8 and transmit the address (SZ1/1...6) required when several machines are operated on a serial bus; the two remaining inputs 7 and 8 determine the baud rate for the data transmission (300, 1200, or 9600). The address board is plugged in from the back of the recorder into J2 of the remote interface.

The remote control keys are connected to the data bus T-DT-RP1 via IC8 (8-INPUT MULTIPLEXER WITH 3-STATE OUTPUT). When the PLAY remote control key is pressed, for example, the input D2 changes to 0. With the address T-ADR-A, B, C, = 0 and T-READ-SL = 0, the output T-DT-RP1 changes to 1.

The feedback lamps are switched on via T-DT-RP1 and IC5 (8-BIT ADDRESSABLE LATCH). When the PLAY command is accepted, the data bit T-DT-RP1 = 1 is transmitted with the address T-ADR-A, B, C = 0, 1, 0, and T-WRITE-SL = 0. As a result the output Q2 of IC5 changes to 1 and switches on the PLAY pilot lamp via the open-collector driver IC2. The lamp remains on until the data bit T-DT-RP1 = 0 is transmitted via the PIA with the address T-ADR-A, B, C = 0, 1, 0, and T-WRITE-SL = 0.

The signals SR-VARSP (varispeed on) and SR-TRANS and SR-REM-DIS (disable remote control) are connected to the data line T-DT-RP2 via IC7 (8-INPUT MULTIPLEXER WITH 3-STATE OUTPUT).
SR-REM-DIS is not wired on the 25-pin REMOTE CONTROL connector.

The fader start circuit is connected through a rectifier bridge with D1 ... D4 to the optocoupler IC1. The ouput transistor of IC1 controls input D6 of IC8. The fader start circuit can be powered either externally from the mixing console or by the internal supply of the tape recorder (+24 V on connector pin 25).

3.5.7 COMMAND UNIT GR 21

1.810.300/1.810.303

12 (Hall) keys and display (1.810.300: 4 1/2 position LCD; 1.810.303: 5-position LED) with leading negative sign. Status indicator lamps for all keys (except RESET, TIMER and ZERO-LOC).

Twenty code switches are located on the underside of the command unit:
- Standard selection for time code (film, TV Europe, TV USA black/withe, TV USA color NTSC).
- Code track audio and time code without offset (1,2" offset)
- LIFTER (momentary or flip-flop button)
- Record drop-in sequence
- Record drop-out sequence
- Tape type "A" or "B" at slow speed
- Tape type "A" or "B" at high speed
- Mono/stereo selector or tape type selector
- Tape speed selection
- Drop-in directly from PLAY with REC
- Reprogramming of LOC 2, LOC 3, LOC 4 keys.

Also refer to Section 4.2.9.

The command unit is connected to the microprocessor through the MPU bus.
The 12 keys and the 20 code switches are arranged in four groups. Each group is connected to the data bus by a buffer/driver IC2, 3, 6, 7 (OCTAL BUFFER-/LINE DRIVER WITH 3-STATE OUTPUTS).
Two 8-bit registers IC4, 5 turn on the 10 status indicator lamps (LED) through driver stages.

If signal T-CUSTR (COMMAND UNIT STOBE) = 0, the address decoder IC1 (1-OF-8 DECODER/DEMULTIPLEXER) decodes the address sent by the microprocessor through the address bus (in intervals of approx. 20 ms). Data (activated keys) can be received from the microprocessor with T-RW (PROCESSOR'S READ/WRITE) = 1, and the data output by the MPU (status indicator lamps, display) are processed with T-RW = 0.

Example of a command transmission:
T-RW = 1; address bits T-ADR-X, Y, Z are 1, 0, 1. T-SL5 is, therefore, 0 and enables IC2 (OCTAL BUFFER/LINE DRIVER WITH 3-STATE OUTPUTS). If the PLAY key is pressed, then T-DATA-2 = 0.
As soon as the microprocessor has accepted the PLAY command it transmits the address 1, 0, 1 and T-DATA-2 = 1; with T-RW = 0, T-SL2 becomes 0 and enables the 8-bit register IC4. The available data bit T-DATA-2 = 1 is transferred into the register with the rising edge of T-SL2. B-PLAY is switched on through the driver stage IC2. It remains on until the switch-off command (T-DATA-2 = 0, T-RW = 0, T-ADR-X, Y, Z = 1, 0, 1) arrives.

Tape timer display (LCD version)

The 4 1/2 position liquid crystal display with leading negative sign is controlled by the three address bits T-ADR-X, Y, Z as well as T-CUSTR and the 8 data bits. The address decoder of the command unit also requires the signal T-SL1.

The digits are selected with T-ADR-X, Y, Z; the segments with T-DATA-0, 1, 2, 3. If both T-ADR-Z and T-CUSTR are low, the available data are read in; if one of the two signals changes to high, the stored data are written on the outputs. The display decoder/driver for four digits with built-in oscillator (approx. 60 Hz) is implemented in CMOS-LSI technology and can directly select the four digits of the LC display.

The data T-DATA-4, 5, 6, 7 are read into the 4-bit D-flip-flop IC2 during the rising edge of T-SL1. They define the two colons, the leading negative sign and the digit 1 (hour).

Display example: -:43:10 (-43 minutes, 10 seconds)

DISPLAY	ADDRESS Z Y X	DATA BITS 7 6 5 4 3 2 1 0
- : :	1 0 0	1 0 1 1 X X X X
4	0 0 0	X X X X 0 1 0 0
3	0 1 0	X X X X 0 0 1 1
1	0 0 1	X X X X 0 0 0 1
0	0 1 1	X X X X 0 0 0 0

X = "dont care"

The control frequency of the LC display can be varied by changing the rating of the capacitor C1 on the DISPLAY BOARD 1.810.736 in order to optimize the contrast of the display to various viewing angles.
The rating selected for C1 has been optimized to a horizontally installed machine (perpendiculary and lightly slanted viewing from the front). For other applications, the rating of C1 should be determined empirically, however 220 pF should not be exceeded.

Tape timer display (LED version)
(Only applicable in conjunction with the new MPU board 1.820.780).

This 5-position LED display with leading negative sign is controlled by the tree address bits T-ADR-X, Y, Z as well as T-CUSTR, T-RW, T-MODESL and the data bits T-DATA-0 ... 3 and T-DATA-7.

The digits are selected with T-ADR-X, Y, Z; the segment with T-DATA-0, 1, 2, 3, and 7. The 8-position display decoder/multiplexer/driver IC1 is implemented in CMOS technology and directly controls the five 7-segment LED displays.

Display example: -.43.10 (-43 minutes, 10 seconds)

DIGIT	ADDRESS Z Y X	T-MODESL	DATA BITS 7	3 2 1 0
-.	1 0 0	0	0	1 0 1 0
4	0 1 1	0	1	0 1 0 0
3.	0 1 0	0	0	0 0 1 1
1	0 0 1	0	1	0 0 0 1
0	0 0 0	0	1	0 0 0 0

On time code versions equipped with the new time code amplifier 1.820.721.81/82/83/84, the far right decimal point of the LED display turns on when a code signal is available at the input or is being read from tape (depending on the position of the INP/SYNC/REP selector).

3.5.8 SERIAL REMOTE CONTROLLER GR 20 EL 03

1.810.751

Interface for serial remote control
- Audio parameter saving on tape
- Connection to a terminal
- Expanded test system

Copying data on tape

The audio parameters stored in RAM can be copied for backup purposes to a tape via the 9-pin connector of the serial remote controller. Pins 4 and 6 of the 9-pin connector must be connected to the RECORD input of the tape recorder (or an external cassette recorder). Also refer to Section 4.2.7.

When the 9-pin connector is plugged into the REPRODUCE output of the tape machine (or the cassette recorder), the stored data can be read back into the RAM. Also refer to Section 4.2.8.

The transmit line T-TX of the microprocessor is connected to IC1 (QUAD LINE DRIVER with 3-STATE OUTPUTS). The output of the latter is enabled by the signal T-DRVENB = 1. The balanced output of the line driver is connected to the output terminals via an isolating transformer.

When no data are transmitted, the signal T-DRVENB is 0, and the output of IC5 has high impedance.

The receive path leads from the connector terminals via the transformer to the line receiver "A" of IC4 (Quad RS 422/423 LINE RECEIVER WITH 3-STATE OUTPUT). The output of the latter is connected to the microprocessor via the receive line T-RX. The internal hysteresis improves the signal-to-noise ratio of IC4.

RS 232 connector pins

The connector pins 2, 3, 7, 8, and 9 are used for connecting an external terminal equipped with an RS 232 interface. SNDATA is the transmit line. The line driver "A" of IC3 (QUAD LINE DRIVER) processes the transmit signal (T-TX) of the microprocessor. RCVDATA is the receive line. The receive signal is taken via the line driver "B" of IC4 to the receive line T-RX of the microprocessor.

DEBUG display
The LEDs of the DEBUG display indicate the status of the data bus, the address bus, and the three selector lines.
T-RW and switch 4 (WRITE/READ) decide whether the WRITE or the READ signals of the MPU bus are to be represented.
IC7 and IC8 (OCTAL D-TYPE FLIP-FLOP WITH 3-STATE OUTPUTS) control the LEDs via driver circuits. The STROBE signals of the SELECT lines together with the T-RW time the IC5 and IC7. The representation of the STROBE signals (40 ns) is delayed by IC9 (HEX INVERTER) in order to compensate the clock preparation delay (IC8).
The DEBUG display can be switched ON/OFF with switch 1.

The two pilot lamps SEND and RECEIVE indicate whether or not data are transmitted on the T-TX and T-RX lines.

3.5.9 CAPSTAN MOTOR CONTROL GR 26

PLL control loop of the second order.
A toothed ring coupled to the capstan shaft induces capacitive changes in the tacho sensor (GR 26, EL 06). This variable capacitance determines the frequency of an HF oscillator with Q3. The change in capacitance causes a frequency modulation of the oscillator signal which is demodulated in IC2 (FM-IF AMPLIFIER AND DEMODULATOR). The AF voltage, the frequency of which is proportional to the capstan speed, is shaped into a square-wave signal and constitutes the actual value of the control loop.

The reference is prepared by dividing the 9.6 kHz reference frequency of the microprocessor. The reference frequency T-REFINT is divided in IC 4 (PROGRAMMABLE DIVIDE-BY-N COUNTER) TO 3200, 1600, 800 OR 400 Hz, depending on the selected tape speed (corresponds to 30, 15, 7.5, and 3.75 ips respectively. The dividing ratio is determined by the signals T-SPSL1 and T-SPSL2:

RATIO OF DIVISION	:3	:6	:12	:24
T-SPSL1	0	0	1	1
T-SPSL2	0	1	1	0

IC10 converts the TTL level to CMOS level.

The actual value and the reference value are compared in a phase comparator circuit (IC5/2, IC6, and IC7). A control signal results on the output of IC7 (PARALLEL-IN / PARALLEL-OUT SHIFT REGISTER). This signal is taken through a low-pass filter to IC1/1, an integrator, and IC1/2.
The speed signals T-SPSL1, 2 influence the control caracteristic via Q4, Q5.

The output signal of IC1/2 controls the motor transistor Q1. The motor current flows from the 130 VAC (4-pole capstan) or 140 VAC (2-pole capstan) transformer winding through the capstan motor winding, the rectifier bridge DZ1, and in the form of a pulsating DC current through the motor transistor Q1.
The voltage drop at R1 is an image of the motor current.

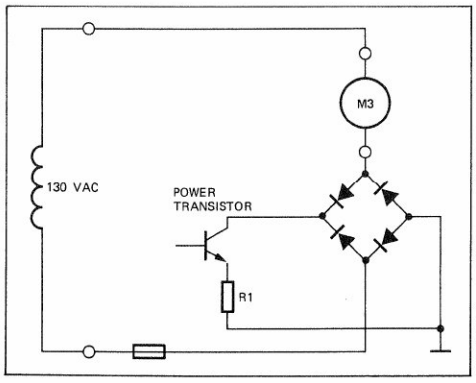

DC braking is activated when switching to a lower tape speed or if fast speed reduction is initiated by the varispeed control. The brake transitor Q2 is controlled through IC3; a pulsating DC current flows from the auxiliary phase through D3, Q2, and R19.
The circuit with IC12/2 (RETRIGGERABLE / RESETABLE MONOSTABLE MULTIVIBRATOR) and Q6 enables Q2 only if the speed is reduced through T-SPSL1, 2 or T-REFEXT.

Through IC12/1, the control signal on the output of IC7 controls the status indicator lamp DL1 and the signal T-SYNCAP which informs the microprocessor that the capstan lock has been achieved.

3.5.10 SPOOLING MOTOR CONTROL GR 24

The operating frequency of the switched spooling motor control is 76.8 kHz. This frequency is obtained by dividing the microprocessor clock frequency.

The 125 V, 50...60 Hz spooling motor voltage is switched on and off with the clock frequency. The generated motor output depends on the width of the ON pulses.

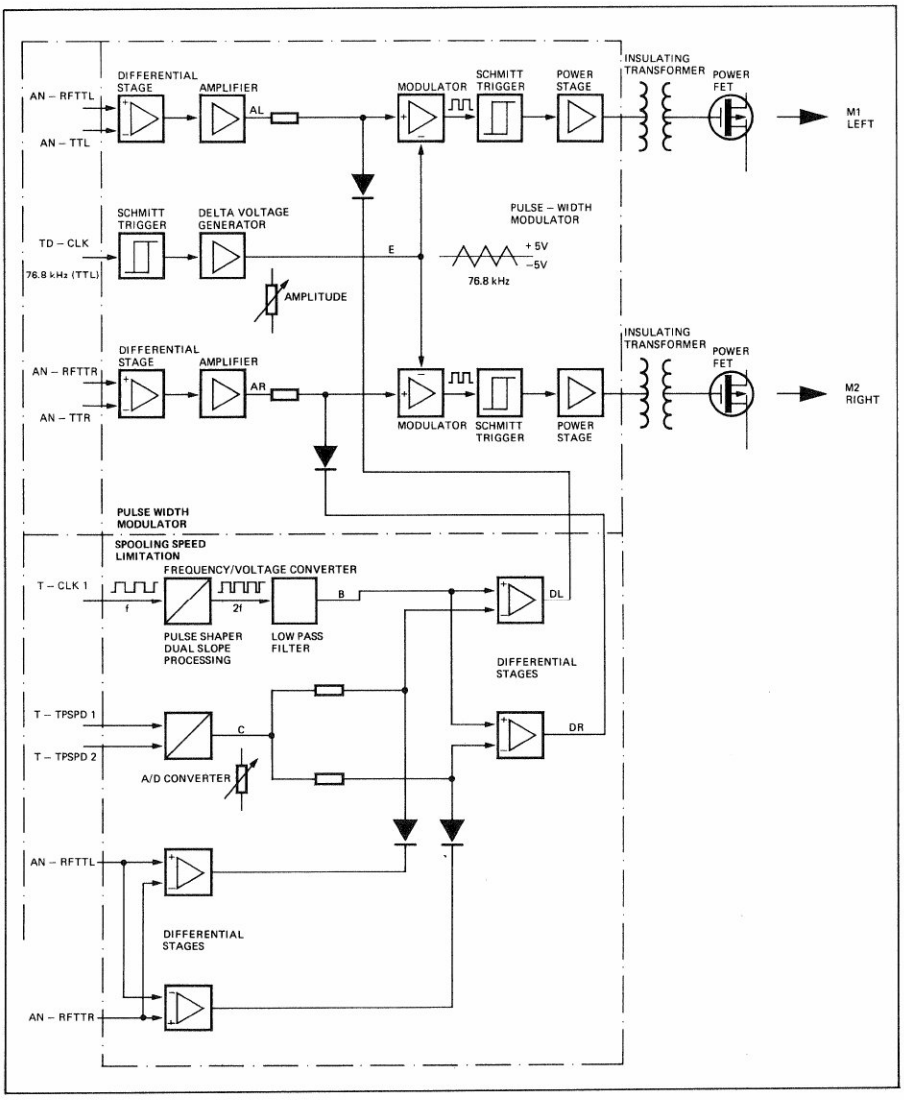

Pulse width modulator:
From the signals AN-TTL (AN-TTR) (actual tape tension) and AN-RFTTL (AN-RFTTR) (reference tape tension), a differential signal is created that is amplified in IC7/2 (IC10/2).

A Schmitt trigger (IC 2) removes noise from the TD-CLK signal (76.8 kHz) that has been derived from the microprocessor clock frequency, and the signal is subsequently taken to a triangular-wave generator (IC1, Q1, Q2, D2...D5). The triangular-wave generator converts the 76.8 kHz square-wave voltage to a delta voltage that is symmetrical relative to zero and which has the same frequency. The amplitude of this voltage can be adjusted with R65.

In the pulse width modulator IC8 (IC11), the delta signal is modulated with the differential signal (AN-RFTT - AN-TT). With the differential signal (AN-RFTT - AN-TT), control pulses are formed through an additional Schmitt trigger IC9/1 (IC12/1) and the power stage IC9/2 ... 6 (IC12/2 ... 6). These signals are of proportional duration, i.e. a large differential signal results in wide control pulses or high motor output.

The amplified differential signal (AN-RFTTL - AN-TTL or AN-RFTTR - AN-TTR) is clamped with diodes D15 and D12 or D16 to 4.3 V + 0.7 V = 5 V. The amplitide of the delta voltage is adjusted so that the cyclic duty factor of the control pulses does not exceed 95%.

Limiting the spooling speed:
The spooling speed can be reduced from the maximum speed (approx. 10 m/s) to 7, 4, or 1 m/s by pressing TRANS <REDUCED> and one of the spooling keys.

The spooling speed is maintained exactly at the selected value by reducing the duty factor of the control pulses (motor output!).

The speed information is supplied by the tape move sensor coupled to the right-hand guide roller. The square-wave T-CLK1 is converted by a pulse shaper with two-edge interpolation IC6/1, 2 into a pulse train of doubled frequency, i.e. a pulse of constant width is formed from each edge of T-CLK1.

A low-pass filter C7/R22/C6 converts these pulses to a DC voltage that is proportional to the tape speed (actual value). This voltage is applied to the differential stages IC3/1, 2.

The two signals T-TPSD1, T-TPSD2 determine the spooling speed. They are converted into a DC voltage (reference value of the spooling speed) by the digital/analog converter IC5. The reference value is adjustable with R66 and is taken through R14, R15 to the differential stage IC3/1, 2.

The signals AN-RFTTL, AN-RFTTR (tape tension reference value) determine through the differential stages IC4/1, IC4/2 the motor (take-up side) for which the driving must be reduced.

The output signals of the differential stages IC3/1 and IC3/2 limit the differential signals (AN-RFTTL - AN-TTL or AN-RFTTR - AN-TTR respectively) and directly influence the width of the control pulses.

Spooling motor output stage:
The spooling motor output stage is supplied directly from the 125 VAC voltage of the power transformer. This AC voltage is taken via fuse F1 to the rectifier bridges DZ1, DZ2. The variable-width control pulses are taken via T1, T2 to the NMOS power FETs Q6, Q5.
These FETs are switched on and off with a frequency of 76.8 kHz and supply the spooling motors with a current, the mean value of which is proportional to the ON ratio (pulse width) of the FETs.
This arrangement with rectifier bridges ensures that the current switched on and off by the FETs always flows in the same direction (pulsating DC current) even though the polarity of the 125 V motor voltage changes.

The motor current flows through the storage chokes L1, L2 and the spooling motors back into the transformer winding.
A magnetic field is built up in the storage chokes L1, L2 while FETs are switched on. This field is eliminated at the moment the FETs are switched off, thereby inducing in the choke a voltage of inverse polarity. This voltage causes a current to flow through the free-wheeling diodes D20 ... D23, the commutator circuit, and the motor winding. The commutator circuit with Q3, Q7 (for the negative half-wave) and Q4, Q8 (for the positive half-wave) shape this free-wheeling current so, that no dangerous voltage spikes can occur, i.e. also the free-wheeling current is a DC current that pulsates with the frequency of the line voltage.

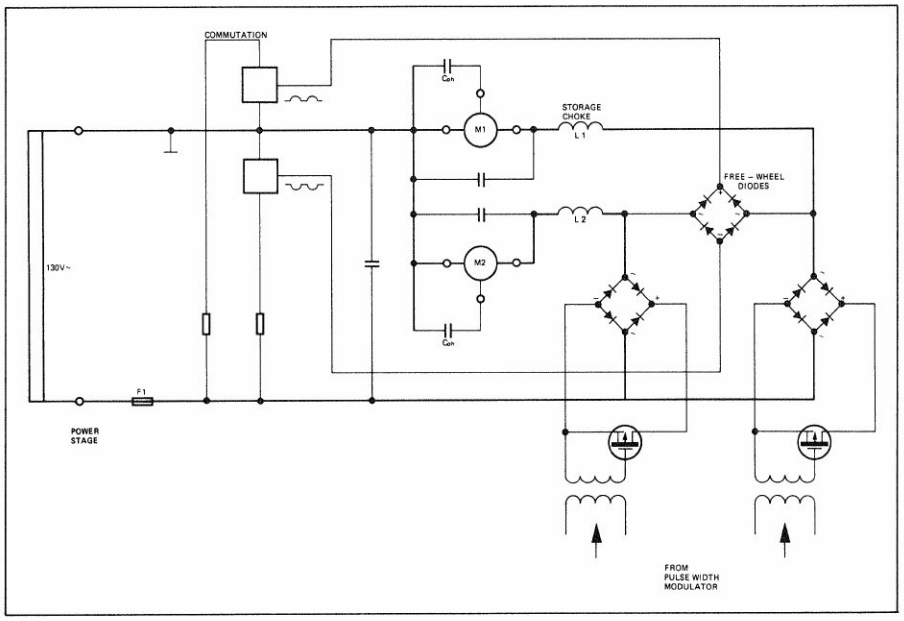

3.5.11 TAPE TENSION SENSORS GR 27, GR 28

IC 1/1 and IC 1/2 together with C5, R16, and R17 constitute the oscillator that operates with a frequency of approximately 833 kHz. The oscillator signal is amplified and induces a pulsating magnetic field. Depending on the tape tension sensor, the decoupling coil L2 is attenuated more or less by the screening plate connected to the sensor arm. The bridge D1 ... D2 rectifies the output signal of L2. The signal is amplified in IC2/1 and IC2/2 and noise voltages are eliminated. The signal AN-TTL/R is adjusted with R5 to 0 ± 50 mV (no deflection) and with R14 to +4 V ± 50 mV (+30° deflection).

3.5.12 TAPE MOVE SENSOR GR 28, EL 05

The 10 teeth of the serrated ring interrupt the two light barriers DLQ 1 and DLQ 2 for when the right-hand guide roller is rotating. As a result they switch Q1 and Q2 on and off.
The light barriers are arranged so that the output signals (T-CLK1 and T-CLK2) are offset by 90°.

3.5.13 TAPE END SENSOR GR 27, EL 04, GR 28 EL 06

When the tape end sensor is in the neutral position, the light barrier (GR 27, EL 04 or GR 28, EL 06) is switched on and the output signal T-TENDL/R = 0.

SECTION 4 AUDIO page

4	AUDIO	4/1
	Audio block diagram	4/1
4.1	CIRCUIT DESCRIPTIONS	4/2
4.1.1	Line amplifier GR 20 EL 11, EL 16, input and output terminals	4/2
4.1.2	Reproduce amplifier GR 20 EL 10, EL 15; preamplifier	4/3
4.1.3	Mono/stereo switch GR 20 EL 12 (Option)	4/4
4.1.4	HF driver GR 20 EL 08, EL 13	4/5
4.1.5	Record amplifier GR 20 EL 09, EL 14	4/6
4.1.6	Time code channel	4/7
4.2	CALIBRATION	4/10
4.2.1	Introduction	4/10
4.2.1.1	General	4/10
4.2.1.2	Level	4/11
4.2.1.3	Equalizations	4/11
4.2.1.4	Magnetic reference flux	4/11
4.2.1.5	Calibration tapes	4/12
4.2.1.6	Preparatory steps	4/13
4.2.1.7	Input keyboard	4/15
4.2.2	Reproduce adjustments	4/18
4.2.2.1	Preparatory steps	4/18
4.2.2.2	Reproduce level adjustment	4/18
4.2.2.3	Azimuth alignment of the reproduce head	4/19
4.2.2.4	Frequency response adjustment	4/20
4.2.2.5	Adjustments for other tape speeds	4/21
4.2.3	Record Adjustments	4/21
4.2.3.1	Preparatory steps	4/21
4.2.3.2	Record level preadjustment	4/22
4.2.3.3	Aligning the azimuth of the record head	4/22
4.2.3.4	Bias adjustment	4/23
4.2.3.5	Azimuth alignment STEREO	4/23
4.2.3.6	Record level adjustment	4/23
4.2.3.7	Frequency response adjustment	4/23
4.2.3.8	Cross talk adjustment (2-channel and stereo models only)	4/24
4.2.4	Sync adjustments	4/25
4.2.4.1	Preparatory steps	4/25
4.2.4.2	Sync reproduce level adjustment	4/25
4.2.4.3	Frequency response adjustment	4/25
4.2.4.4	Adjustments for the other tape speeds	4/26
4.2.5	Time code reproduction	4/27
4.2.5.1	Preparatory steps	4/27
4.2.5.2	Checking the height of the heads	4/28
4.2.5.3	Tape guidance	4/28
4.2.6	Time code recording	4/29
4.2.6.1	Preparatory steps	4/29
4.2.6.2	Adjusting the height of the right-hand code head	4/29
4.2.6.3	Preparatory steps	4/30
4.2.6.4	Bias adjustment	4/31
4.2.6.5	Record level adjustment	4/33
4.2.6.6	Checking the head gap position, reproduce	4/33

4.2.6.7	Checking the head gap position, via tape	4/34
4.2.6.8	Checking the time code reproduction in spooling mode	4/34
4.2.7	External storage of the audio parameters	4/35
4.2.7.1	Principle of saving the audio parameters	4/35
4.2.7.2	Connecting the recorder to the remote control connector	4/35
4.2.7.3	Preparatory steps	4/36
4.2.7.4	Saving the audio parameters	4/36
4.2.7.5	Verification	4/37
4.2.8	Reading in the audio parameters through the serial interface	4/38
4.2.8.1	Connecting the recorder to the remote control connector	4/38
4.2.8.2	Preparatory steps	4/38
4.2.8.3	Loading the audio parameters	4/39
4.2.9	Programming the operating parameters	4/40
4.2.9.1	Code switches of the COMMAND UNIT	4/40
4.2.9.2	Code switches PERIPHERY CONTROLLER	4/43
4.2.9.3	Code switches LINE AMPLIFIER	4/44
4.2.9.4	Jumper REPRODUCE AMPLIFIER	4/46
4.2.9.5	Jumper VU-meter amplifier	4/46
4.2.9.6	Jumper and code switches SERIAL REMOTE CONTROLLER	4/47
4.2.9.7	Code switches SERIAL INTERFACE	4/48
4.2.9.8	VU-meter panel internal or external	4/48
4.2.9.9	Jumpers MONO/STEREO SWITCH and/or TEST GENERATOR	4/49
4.2.9.10	Jumpers TIME CODE READ/WRITE UNIT	4/50
4.2.9.11	Jumpers TAPE DECK CONTROLLER	4/51
4.2.9.12	Jumpers CAPSTAN MOTOR CONTROL	4/52
4.2.9.13	Jumpers VARISPEED CONTROL	4/53
4.2.9.14	Jumpers TAPE TRANSPORT REMOTE CONTROL	4/54
	BIAS ADJUSTMENTS	4/56

4 AUDIO

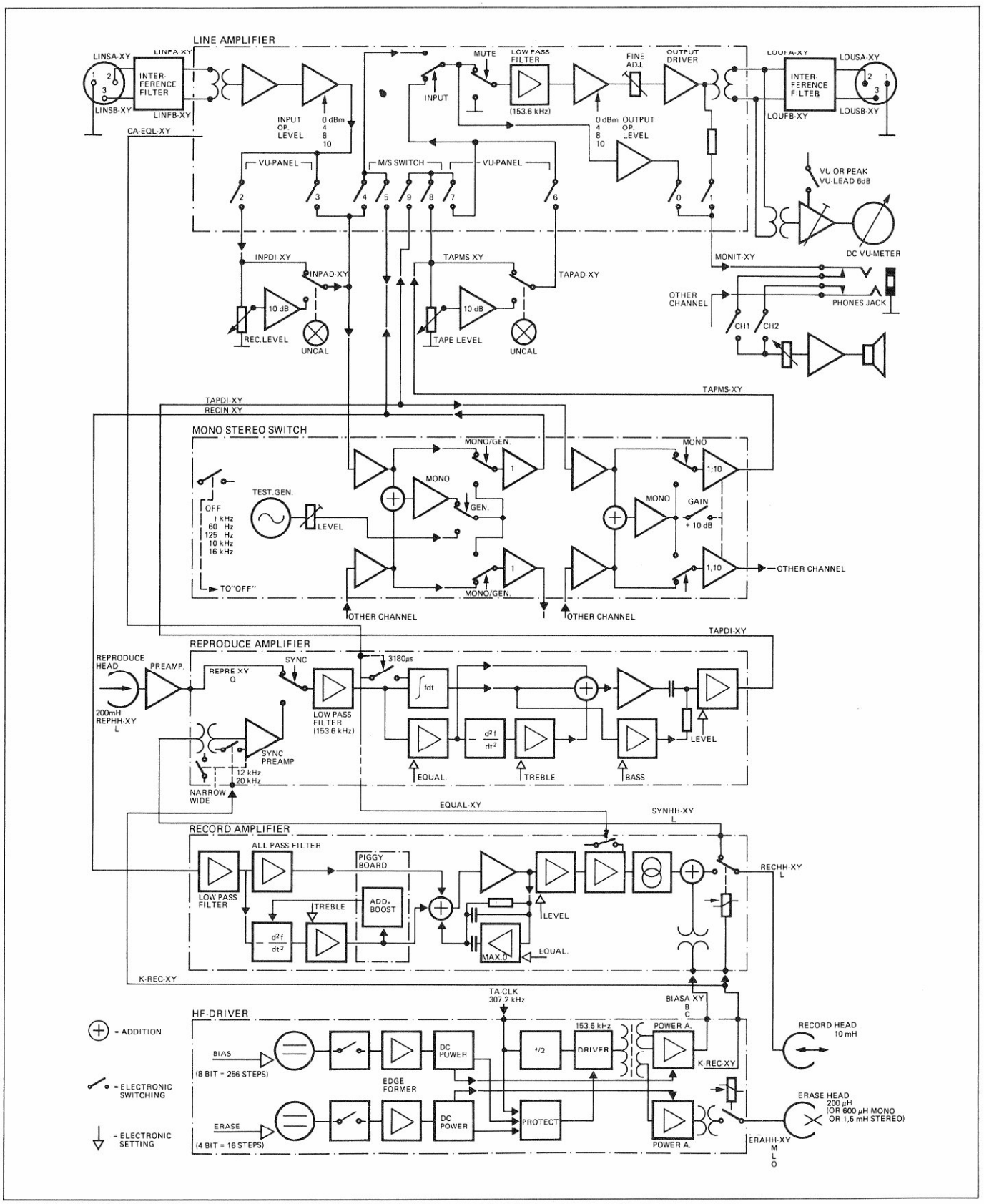
LINE AMPLIFIER
LINSA-XY
LINSB-XY
INTER-FERENCE FILTER
LINFA-XY
LINFB-XY
CA-EQL-XY
INPUT OP. LEVEL
0 dBm
4
8
10
MUTE
INPUT
LOW PASS FILTER
(153.6 kHz)
FINE ADJ.
OUTPUT DRIVER
OUTPUT OP. LEVEL
LOUFA-XY
LOUFB-XY
LOUSA-XY
LOUSB-XY
VU-PANEL
M/S SWITCH
VU OR PEAK
VU-LEAD 6dB
DC VU-METER
INPDI-XY
INPAD-XY
TAPMS-XY
TAPAD-XY
MONIT-XY
OTHER CHANNEL
PHONES JACK
CH1
CH2
10 dB
REC.LEVEL
TAPE LEVEL
UNCAL
TAPDI-XY
RECIN-XY
MONO-STEREO SWITCH
MONO/GEN.
MONO
GEN.
TEST.GEN.
OFF
1 kHz
60 Hz
125 Hz
10 kHz
16 kHz
LEVEL
TO "OFF"
GAIN
+ 10 dB
1;10
OTHER CHANNEL
REPRODUCE AMPLIFIER
REPRODUCE HEAD
PREAMP.
200mH
REPHH-XY
L
REPRE-XY
Q
SYNC
3180µs
LOW PASS FILTER (153.6 kHz)
SYNC PREAMP
12 kHz
20 kHz
NARROW
WIDE
EQUAL.
TREBLE
BASS
LEVEL
EQUAL-XY
SYNHH-XY
RECORD AMPLIFIER
ALL PASS FILTER
PIGGY BOARD
LOW PASS FILTER
TREBLE
ADD. BOOST
MAX 0
EQUAL.
RECHH-XY
K-REC-XY
TA-CLK
307.2 kHz
BIASA-XY
HF-DRIVER
= ADDITION
= ELECTRONIC SWITCHING
= ELECTRONIC SETTING
BIAS
(8 BIT = 256 STEPS)
DC POWER
f/2
153.6 kHz
DRIVER
POWER A.
K-REC-XY
RECORD HEAD
10 mH
EDGE FORMER
ERASE
(4 BIT = 16 STEPS)
PROTECT
ERASE HEAD
200 µH
(OR 600 µH MONO
OR 1,5 mH STEREO)
ERAHH-XY

4.1 CIRCUIT DESCRIPTIONS

The audio section comprises:
- LINE AMPLIFIER
- REPRODUCE AMPLIFIER
- MONO/STEREO SWITCH (Option)
- RECORD AMPLIFIER
- HF DRIVER
- CODE READ/WRITE UNIT and CODE DELAY UNIT (Option)

It also includes the following peripheral assemblies:
- Headblock
- Level meters
- Monitor amplifier
- Record level control
- Reproduce level control

] depending on version

4.1.1 Line amplifier GR 20 EL 11, EL 16, input and output terminals

1.820.714 (with input/output transformer)

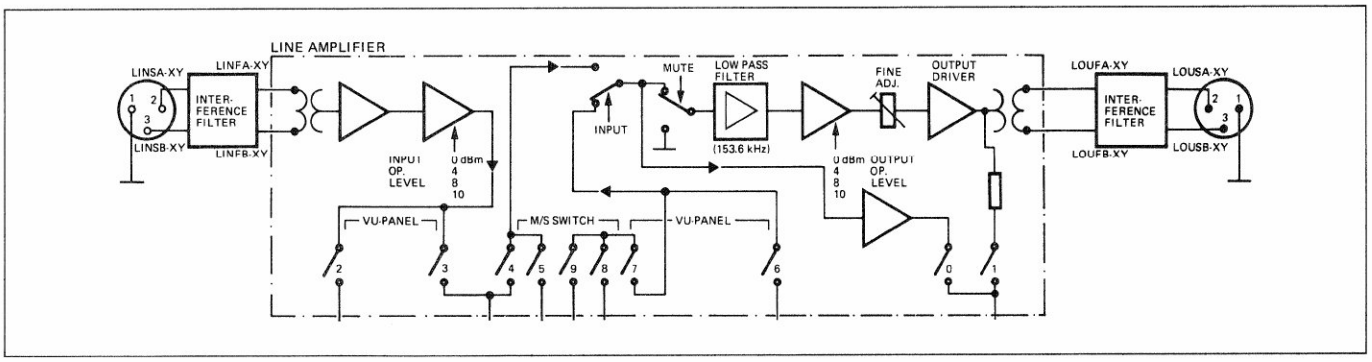

The following settings are made by the microprocessor through an 8-way D-flip-flop (IC1):

CA-DATA0 ... 3	switches the line level of the input and output to 0, 4, 8, or 10 dBm.
CA-DATA4	switchover from INP to REP/SYNC.
CA-DATA5	muting of line output.
CA-DATA6	switches the reproduce amplifier from REP to SYNC.
CA-DATA7	switches NAB equalization (3180 µs) on.

The flip-flop transfers the data available on the D-inputs to the Q-outputs with the rising edge of the clock pulse.

The input signal is taken from the input connector through a noise filter to the line amplifier. The noise filter prevents high-frequency voltages generated by nearby transmitters from entering into the tape recorder through the connecting cable.

Noise frequencies are eliminated by a low-pass filter ahead of the input transformer.
The input amplifier with IC3/1 is followed by the trimmer potentiometer R51 with which the manufacturing tolerances of the input transformer are compensated. The gain factor of IC3/2 is switched to the desired line level by the flip-flop outputs and Q1, Q2, and Q3.
Switch S1 matches the line amplifier to the corresponding recorder configuration: with or without VU-meter panel or mono/stereo switch.

IC4, IC5 and IC7 switch the line amplifier output from INP to REP/SYNC; IC2, IC6, and IC8 mute the output.
The input selector/muting switch is followed by a low-pass filter with IC10/1. This filter is adjusted with trimmer C22 to maximum attenuation of the 153.6 kHz erase frequency. The gain of IC10/2 is switched to the desired line level by the flip-flop outputs and Q6, Q7, and Q8.

Fine-adjustment of the output level is made with R84. IC9/2 drives the complementary output transistors. The signal is taken to the output socket through a line balance transformer and an additional interface filter.

The signal for the headphones socket and the internal monitor amplifier is tapped before the transformer. The level meters are supplied by the balanced output signal.
The headphones/monitor signal can be switched to the output of IC9/1 with JS0 and JS1 of S1. In this case the monitor level is not affected by the line level adjustment and the muting of the output.

4.1.2 Reproduce amplifier GR 20 EL 10, EL 15; preamplifier in headblock

1.820.710

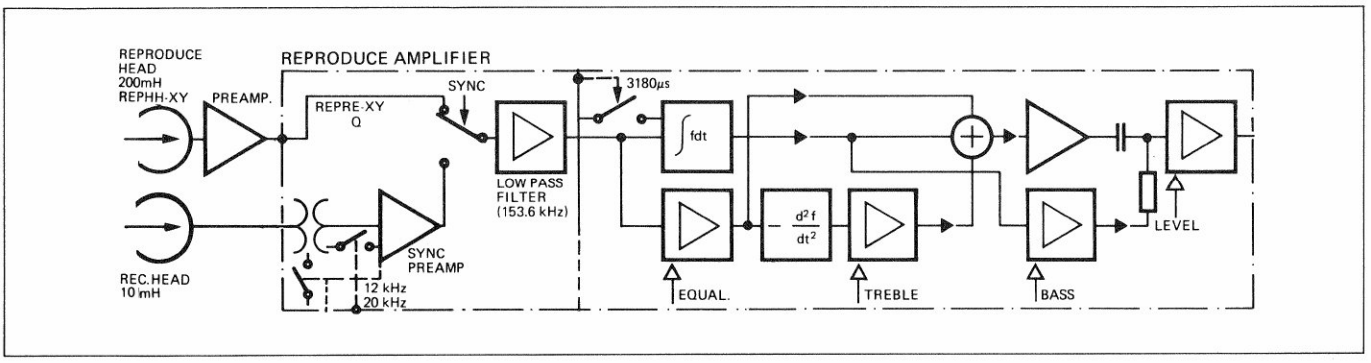

A reproduce preamplifier 1.810.710/711 (GR 32 EL 2) is located between the reproduce head and the reproduce amplifier. This preamplifier which is mounted directly on the headblock (GR 32) produces a gain of approx. 30 dB. Q1 and Q4 are low-noise transistors; IC1 is a low-noise compensated dual opamp. The preamplifier is linear up to approx. 25 kHz.
The preamplifier is only switched on when both supply voltages (± 15 V) are present (D1, Q2). This prevents current from flowing through the head winding and hence magnetizing of the reproduce head if one of the supply voltages is missing.
Cross talk between the two channels is adjusted to the minimum with trimmer potentiometer R14.

The reproduce signal is taken through screened lines to the reproduce amplifier.
The reproduce amplifier is designed so that it can process either the reproduce signal or the sync reproduce signal. The input signal is switched over from normal reproduction to sync reproduction by the signal CA-SYN-01 (-02) trough IC10 and the FET switches IC5 and IC6. The sync signal is conducted through the input transformer T1 and the sync amplifier with Q1, Q2, and IC7/2. The bandwidth of the sync amplifier can be switched over from 12 kHz to approx. 20 kHz by means of a jumper; however, strong cross talk is to be expected between the record and the sync reproduce channel on 2-channel recorders.

The reproduce signal is taken through a low-pass filter with IC14/2. This filter is adjusted with trimmer C31 to maximum attenuation of the 153.6 kHz erase frequency.

The signal CA-EQL-01 (-02) switches the 3180 µs time constant (IC14/1) through IC9 and FET switch IC4.

A signal of the auxiliary path (inverting, two-fold differentiating circuit) is added to the signal of the main path (integrator with IC14/1) for phase-linear gap loss correction of the reproduce amplifier.

The equalization time constant is set with IC16, IC15/1; the reproduce frequency response is set with IC13, IC15/2 (treble) and IC8, IC7/1 (bass). The parameters stored in RAM are transmitted from the MPU to the corresponding 256-step attenuators.

The reproduce level (resolution 256 steps) is set with IC11, IC12/2.

IC2 (DUAL BINARY TO 1-OF-4 DECODER/DEMULTIPLEXER) decodes the address of the corresponding digital/analog converters IC8, 11, 13, or 16 from the address lines of the CMOS bus (CA-ADR-R, -S, -T, -U), and enables the D/A converters for data transmission.

4.1.3 Mono/stereo switch GR 20 EL 12 (Option)

1.820.720/724

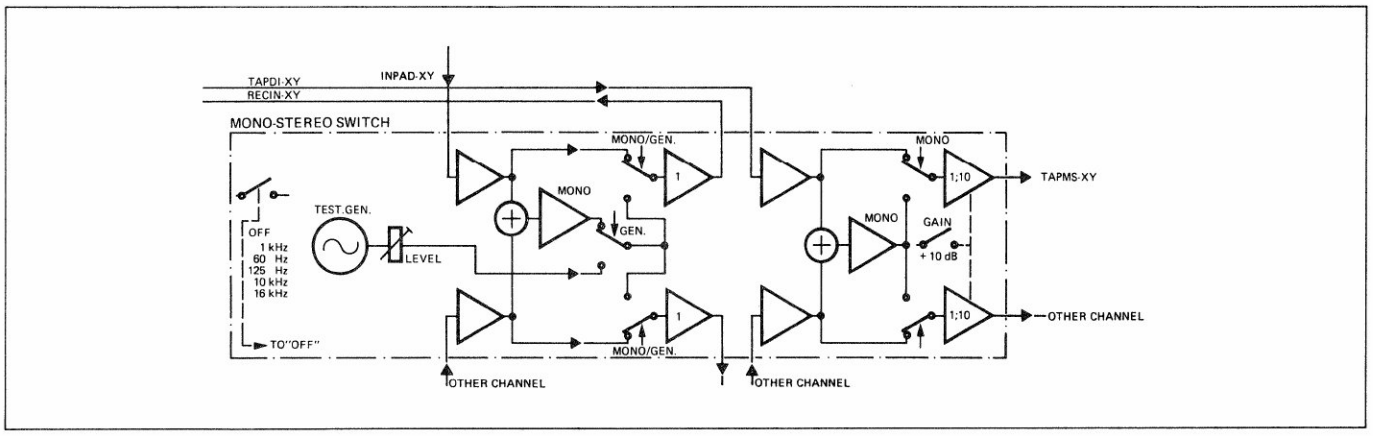

The mono/stereo switch processes the two input signals and the two reproduce signals in separate branches.

The input signals INPAD-01, 02 are taken with internal reference level 0 dBm from the outputs of the two line amplifiers to the mono/stereo switch. The signals buffered by the impedance transformer IC3/1, 3/2 are taken in stereo mode directly to IC6/1, 6/2. In mono mode they are added with resistors R42 and R37 and amplified in IC25/1. The level of the mono signal is matched by R205. Mono/stereo switching is initiated by IC19 (PROM) and comparators IC13/1, 16/2 with the aid of FET switches.
The operating mode is selected with jumper JS2: mono signal INPAD-01 + INPAD-02 or INPAD-01 only.
The signals RECIN-01, 02 which are taken with internal reference level to the record and line amplifiers are developped from the output signals of IC6/1 and IC6/2.

The reproduce signals TAPDI-01, 02 are taken from the reproduce amplifiers to the inputs of the impedance transformers IC10/1, 10/2 after which they are decoupled and added with R81 and R80 to a mono signal. The mono signal is amplified in IC31/1; the level can be adjusted with R206. FET switches are used for change-over between mono and stereo.
The operating mode is selected with jumper JS3; the mono signal can either be connected to channel 1 + 2 (TAPMS-01, 02) or tó channel 1 only (TAPMS-01).
The signals TAPMS-01, 02 are taken to the output stages of the line amplifiers.

TEST GENERATOR
(1.820.724 only)

The test frequencies are generated by the function generator IC2. The balance is adjusted with R8, the sine shape with R20. The frequencies are switched over by IC20 (PROM) and Q1 ... Q5. The frequency generator is switched on by pressing the FREQUENCY button (REF status indicator lamp turns on, i.e. reference frequency, normally 1 kHz, has been selected). Each subsequent pressing of this button switches the frequency as follows:
- 60 Hz - 125 Hz - REF - 10 kHz - 16 kHz - OFF - REF - 60 Hz - etc.

The generator level (nominal level or nominal level -10 dB) can be selected with the LEVEL button. (When -10 dB is selected, the gain in the reproduce branch of the mono/stereo switch is automatically increased by 10 dB; the reference value of the VU-meter is thus again 0 dB when calibrating with tape).
The LEVEL button is only enabled after the test generator has previously been switched on with the FREQUENCY button.

The output signal of the function generator is taken through IC31/2 and IC25/2 to the mono branch. The output signals of IC7/1, 23/2 determine whether the input signals (INPAD-01, 02) or the test signal is input to the record amplifiers (RECIN-01, 02). FET switches are used for change-over.
The generator level is set with R208.
The operating instructions for the test generator can be found in Section 2.5.19.

4.1.4 HF driver GR 20 EL 08, EL 13

1.820.713

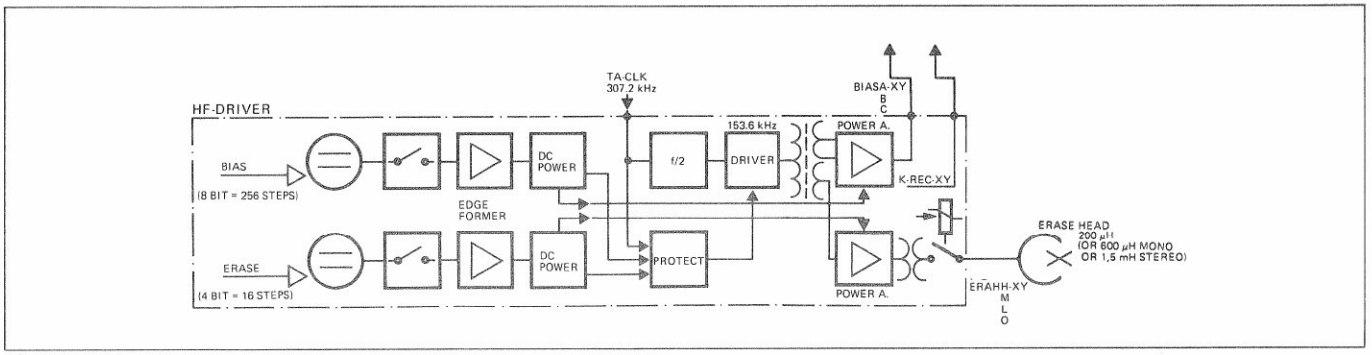

The erase and the bias current are prepared on the HF driver.

The microprocessor quartz reference TA-CLK with 307.2 kHz is divided in IC3 (DUAL JK NEGATIVE EDGE-TRIGGERED FLIP-FLOP) to 153.6 kHz. The outputs of the IC are connected to the HF driver IC11.
The erase and bias output stages are controlled by the windings of transformer T2.

The DC supply voltage for the erase current is defined with IC1 (OCTAL D-TYPE FLIP-FLOP) and IC6/2 (in 16 steps; data lines CA-DATA-0 ... 3). The DC supply voltage for the bias current is defined by the 256-step attenuator IC2 according to the parameters stored in RAM.
IC1 also decodes the commands for switching on the erase and the bias current. CA-SAFE = 0 enables IC1.

The DC voltage level defined by the microprocessor are switched on or off by Q1 (erase current). IC9/1 or IC10/1 respectively shape the on or off edge in such a way that clickfree "soft" drop-in and drop-out is achieved. IC9, Q13, and IC10, Q12 supply the DC currents for the corresponding power output stages. These DC currents are proportional to the required output currents. Q11 or Q10 respectively monitor these currents and switch the HF driver IC11 off through D12 and comparator IC8/1 if an overload occurs.

The clock signal (IC3, pin 9) is monitored ; if it is missing or corrupted, the HF driver is also switched off by IC8/1.

The stand-by signal TA-ACT-01 (-02) is connected through by IC8/2 in order to signal to the microprocessor the operating status of channel 1 or 2. TA-ACT checks that the record amplifier is inserted in the recorder.

The erase current is amplified by Q5 and Q8 and conducted through T1 to the output.
IC7, IC4, and relay K1 switch the erase current on or off.

The bias current is amplified by Q3 and Q4 and taken to the output.

4.1.5 Record amplifier GR 20 EL 09, EL 14

1.820.712

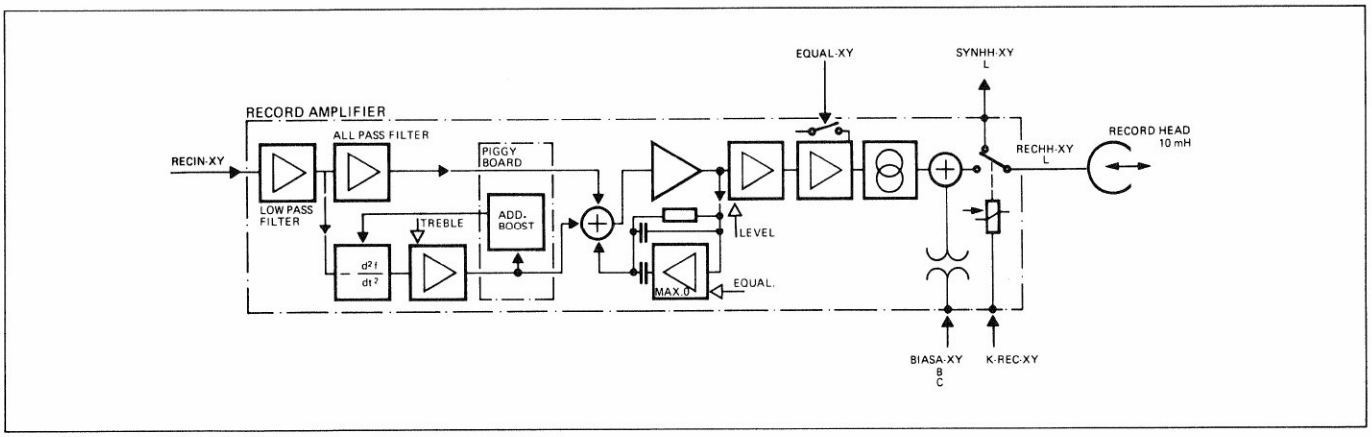

The audio signal RECIN-01 (-02) arriving from the line amplifier is conducted through a low-pass filter with IC7/1. The low-pass filter is designed for maximum attenuation of the 153.6 kHz erase frequency.

The treble losses caused by the air gap in the record head are compensated by a phase-linear correction section. The inverting, two-fold differentiating circuit (IC10) is followed by the final control element for the treble setting IC8, IC9/1 (record frequency response). A portion of the audio signal is mixed as a positive feedback through the plug-in ADAPTATION BOARD into the input of IC10/2 in order to improve the sharpness of the treble correction. The added components of the corrected recording signal are amplified by IC9/2.

The equalization time constant is set by IC5, IC6/1, the recorder level with IC3, IC6/2. The audio parameters stored in RAM are transmitted by the MPU to the corresponding 256-step attenuators.

The 3180 µs time constant is set by the FET switch IC2 with EQUAL-01 (-02).

The record signal is taken to the opamp IC4/2 which functions as a current source.
The signal AFCSW-01 (-02) (AUDIO FREQUENCY CURRENT SWITCH) connects the record current through Q1. The record and bias current are added through T1. The two RF filters with L3 and L4 prevent strew-in of the bias frequency into the other circuit components. The bias current is drained through the series-resonant circuit with L2; a closed bias circuit is thus formed by the two windings of T1 and the winding of the record head.

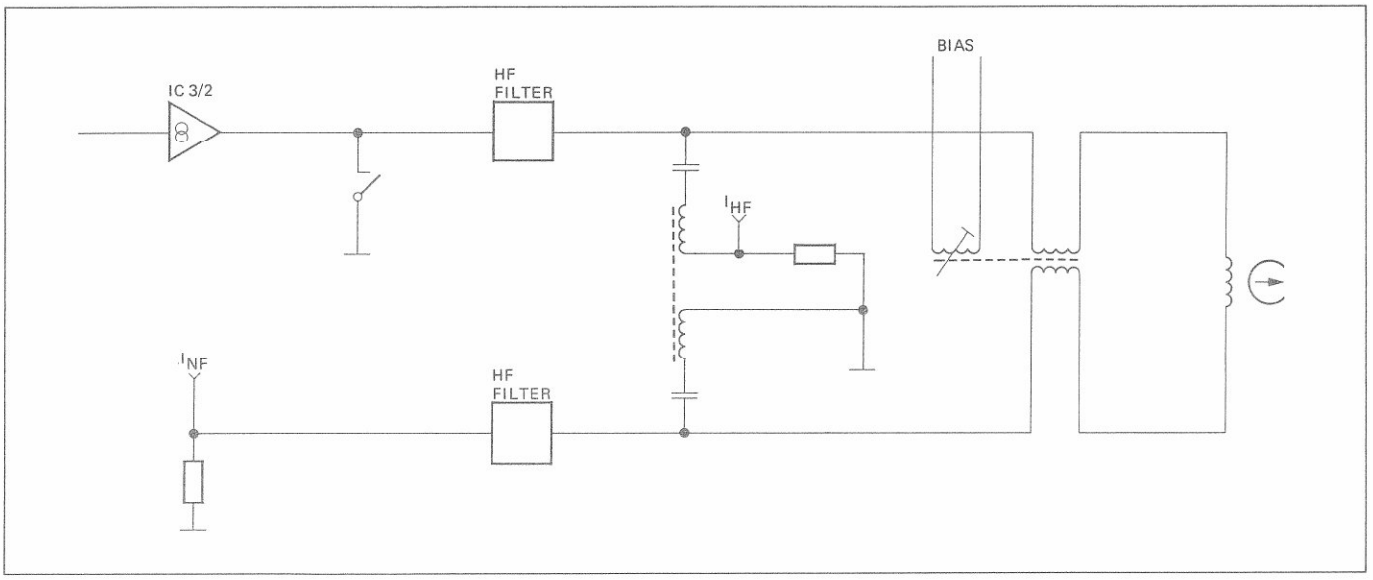

4.1.6 Time code channel

General
Two-channel recorders can be equipped with the time code option. The 0.38 mm wide code track is arranged between the two audio tracks. The time code signal (80 bits according to SMPTE) is recorded through biphase modulation with bias. The tape flux is 729 nWb/m peak-to-peak ±3 dB.

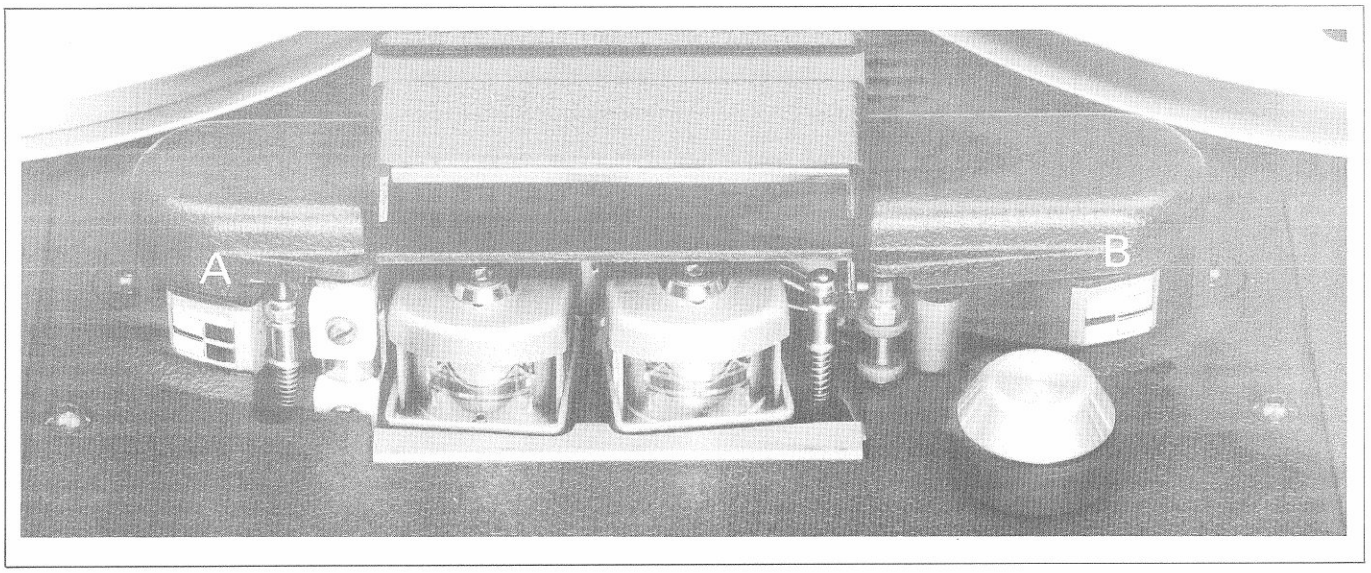

A reproduce (read) head is integrated in the audio erase head {A}. This head "reads" during audio reproduction/recording and slow forward editing. A second time code head is arranged on the far right side of the headblock {B} and is a combined erase/reproduce/record head (read/write head).
This head "reads" during spooling and slow reverse editing and is responsible for recording the time code signals.

CODE READ/WRITE UNIT GR 20 EL 06
1.820.721.81/82/83/84

Time code reproduction:
The signal REPHH-TC, REPHL-TC of the left-hand code head (active during audio reproduction or recording) is input to a low-pass filter/amplifier IC15/1. The low-pass filter suppresses the 153.6 kHz erase frequency (cross-talk between audio erase frequency and time code reproduction). The signal RECHH-TC, RECHL-TC of the right-hand code head is taken to a low-pass filter-/amplifier IC12, IC16. The bandwidth of the filter is automatically switched over with Q7. The bandwidth is wide for spooling and narrow for slow reverse editing.

The outputs of the two filter/amplifiers (signal of the left-hand or right-hand code head) are connected by FET switches Q10, Q11 to the limiter (IC13, changeover switch IC4/2, IC11, IC14, Q9). Even at variable reading speeds (spooling) this limiter supplies a constant-level output signal that is converted to a square-wave signal in a Schmitt trigger (IC6/1, IC10, IC7). Either directly or via the CODE DELAY UNIT (jumper JS2 or changeover switch IC4/1), the time code reproduce signal is taken to the line output amplifier IC2, the line balance transformer T2, and as the signal LOUFA-TC, LOUFB-TC to the balanced and floating output connector.

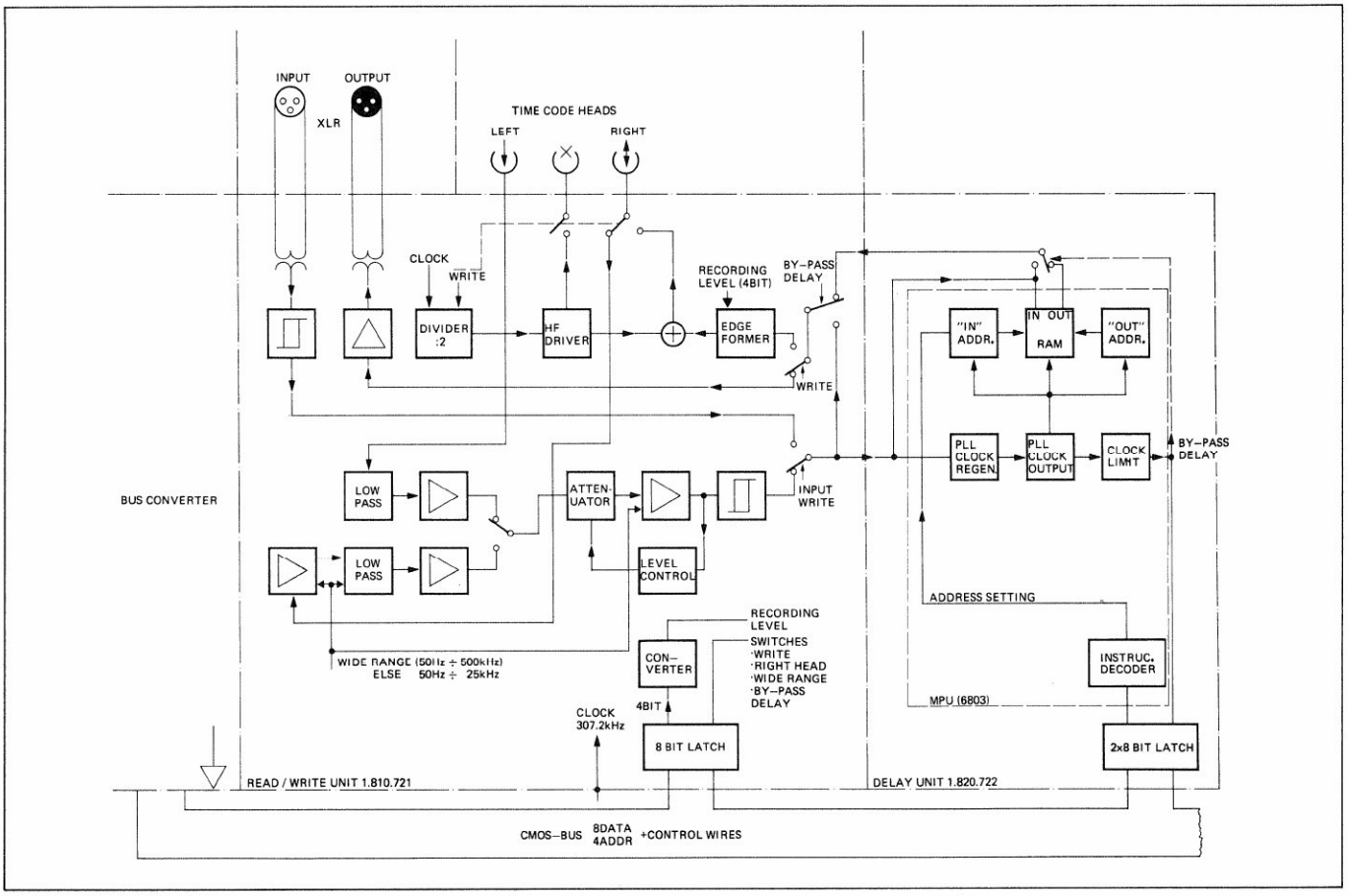

Time code recording:
The recording signal LINFA-TC, LINFB-TC is taken via the balanced and floating input connector, the input transformer T1 and the changeover switch IC4/2 to a Schmitt trigger (IC6/1, IC10, IC7) and via the CODE DELAY UNIT.

The output signal of the CODE DELAY UNIT is connected with changeover switch IC4/3 to the input of the record amplifier. The edges are shaped with Q5, IC9 in such a way that a trapezoidal recording signal is obtained.

The TA-CLK signal from the MPU is divided in IC8 from 307.2 kHz to 153.6 kHz and converted to an erase and a bias current signal in the RF amplifier IC5. The erase current is decoupled via T3 and taken as the signal ERAHH-TC, ERAHL-TC via screened lines to the erase head. The bias current from the secondary winding of T3 is added to the trapezoidal recording signal via the trimmer capacitor C9. The changeover relay K1 determines, whether the combination head is to function as a reproduce or record head. The output signal RECHH-TC, RECHL-TC is taken via screened lines to the combination head.

The following settings are made by the MPU via the CMOS bus (via 8-way flip-flop IC1, address decoder IC3):
- Recording level (4 bits, of which three are used), adjustable with R2 (7.5 ips), R8 (15 ips), and R10 (30 ips)
- Recording (CA-WRTTC = 1)
- Slow reverse editing, right-hand code head, narrow-band (CA-RS2TC = 1)
- Spooling, right-hand code head, wide-band (CA-RS1TC = 1)
- Bypassing the DELAY UNIT (CA-BPDTC = 1)
- INPUT, input signal to output (CA-RS1TC = CA-RS2TC = CA-BPDTC = 1)

For bias and level adjustment refer to Section 4.2.6.

<u>CODE DELAY UNIT GR 20 EL 07</u>
1.820.722

The CODE DELAY UNIT delays the time code signal in such a way that the audio and the time code signals on the tape coincide, i.e. the head spacing is automatically compensated.

A second microprocessor (IC2) (6803) performs this function.

A PLL (PHASE LOCKED LOOP) with clock regeneration is implemented by software.

The external memory of the microprocessor comprises 2K PROM (IC18) and 8K RAM (IC14). 8192 half-bits = 51 frames can be stored in the RAM.

Data from the MPU (1.810.752 or 1.820.780 respectively) are transmitted through the TTL bus, the bus converter, and the CMOS bus to two 8-bit latches IC8, IC9 of the DELAY UNIT and specify:
- Required delay
- Direction of tape travel
- Bypass command

Delay accuracy: ± 1/4 bit.

4.2 CALIBRATION

The audio parameters are copied from RAM and loaded into the registers of the audio amplifiers each time the recorder is switched on, after a microprocessor reset, or when changing the tape speed, the tape type, or the equalization.

When new parameters are entered through the keyboard or through the serial interface, the old parameters stored in the RAM and in the registers of the audio amplifiers are overwritten with the new data.

If the parameters in the RAM are destroyed, the standard parameters are automatically loaded from the PROM. Also refer to Section 2.7.

4.2.1 Introduction

4.2.1.1 General

On recorders equipped with a tape marker, remove the latter (plug-in unit!) before opening the panel flap.

It is assumed that the all mechanical adjustments of the recorder to be calibrated are correct (especially with respect to tape tension and tape guidance).

The soundheads and the tape guidance elements should be cleaned and demagnetized before the recorder is calibrated.

The calibrating steps should always be performed in the following order:

REPRODUCTION:
Tape speed FAST
- Level
- Azimuth alignment of the reproduce head*
- Frequency response

Tape speed SLOW
- Level
- Azimuth alignment of the reproduce head*
- Frequency response

* Minor deviations between the various speeds can occur, depending on the type of calibration tape used. Should this be the case, align the azimuth to the preferred studio speed.

RECORDING:
Tape speed 7.5 or 15 ips (or preferred studio speed)
- Record level preadjustment
- Azimuth alignment of the record head
- Bias
- Record level
- Frequency response

Tape speed 3.75 or 30 ips (or 2nd speed)
- Record level preadjustment
- Bias
- Record level
- Frequency response

SYNC REPRODUCTION
The following adjustments can be made for the three tape speeds 7.5 ips, 15 ips, and 30 ips:
- Level
- Frequency response

Sync operation is not calibrated for the tape speed 3.75 ips. (all parameters at 00).

4.2.1.2 Level

Applies to VU-meter lead of 6 dB!

0 dBm = 0.775 V

OPERATING LEVEL dBm		PEAK RECORDING LEVEL dBm
0	=	6
4	=	10
8	=	14
10	=	16

4.2.1.3 Equalizations

Equalization networks have been built into the reproduce paths for correcting the frequency response.
The attack points are referred to as transition frequencies and transition time constants (1/2πf) and have been standardized by various organizations (IEC, NAB, AES, CCIR).

TAPE SPEED	TRANSITION FREQUENCIES, LOW; HIGH (TRANSITION TIME CONSTANTS)		
	IEC-1968	NAB-1965	NAB-1975
3.75 ips 9.53 cm/s	50 Hz; 1800 Hz (3180 µs; 90 µs)	50 Hz; 1800 Hz (3180 µs; 90 µs)	- (-)
7.5 ips 19.05 cm/s	0 Hz; 2240 Hz (∞; 70 µs)	50 Hz; 3150 Hz (3180 µs; 50 µs)	0 Hz; 3150 Hz (∞; 50 µs)
15.0 ips 38.10 cm/s	0 Hz; 4500 Hz (∞; 35 µs)	50 Hz; 3150 Hz (3180 µs; 50 µs)	- (-)
30.0 ips 76.2 cm/s	0 Hz; 9000 Hz (∞; 17.5 µs)	AES-1971 0 Hz; 9000 Hz (∞; 17.5 µs)	- (-)

4.2.1.4 Magnetic reference flux

A tape recorded with reference level should produce operating level on the output in play mode.

The following standard settings are made at the factory:

NAB OPERATING LEVEL (0 VU) nWb/m	CCIR PEAK RECORDING LEVEL (+6 VU) nWb/m
250 (200 @ 7.5, 3.75 ips)	510 (400 @ 3.75 ips)

4.2.1.5 Calibration tapes

Calibration tapes are used for aligning the reproduce path of tape recorders. Such tapes are magnetized across their full width. A separate tape is used for each speed.

CAUTION
To prevent unintentional erasure of valuable tapes, all channels should be switched to SAFE while adjustments are being made! On recorders without SAFE button, set the two channel switches JS01 and J02 of the PERIPHERY CONTROLLER to 0. (Also refer to Section 4.2.9.2).

Calibration tapes are divided into the following test sections:

Reference level test section:
(Reference flux = 320 nWb/m for 7.5, 15, and 30 ips, 257 nWb/m for 3.75 ips) should produce operating level on the output in play mode.
The output level is adjusted to the required operating level during the reproduction of this test section that has a length of approx. 60 to 180 s.
NAB calibration tapes with a reference flux of 200 nWb/m should yield an output level of -4 VU (reference level -10 dB).

Reference frequencies: 333 Hz or 500 Hz at 3.75 ips, 1 kHz at 7.5 ips through 30 ips (there are also NAB calibration tapes with a reference frequency of 700 Hz).

Azimuth alignment test section:
For adjusting the vertical alignment of the reproduce head gap. This test section is divided into a short segment containing the reference frequency (for coarse adustment) and a long segment with 10 kHz for fine-adjustment.
NAB calibration tapes may be formatted differently. The level of this section is normally 10 dB below the operating level.

The head is aligned to maximum output voltage with the azimuth adjustment screw.
Important: If significant changes in the reproduce head azimuth are made, other voltage maxima with lower levels occur!

With correct equalization of the reproduce amplifier, the reproduce level is identical for recordings with reference frequency and with 10 (8; 16) kHz.

Frequency response test section:
For determining and adjusting the reproduce response at specific frequencies. NAB calibration tapes exist that contain frequencies other than those listed in the following table.

REFERENCE TAPE	CCIR				NAB			
TAPE SPEED cm/s; ips	9.5	19	38	76	3.75	7.5	15	30 (AES)
REFERENCE LEVEL SECTION: REF. FREQUENCY REF. FLUX nWb/m	333 Hz 257	1 kHz 320			500 Hz 200	1 kHz (700 Hz) 200		
AZIMUTH ALIGNMENT SECTION: (-10 dB)	333 Hz 10 kHz	1 kHz 10 kHz			250 Hz 4 kHz 8 kHz	500 Hz (700 Hz) 8 kHz 16 kHz		
FREQUENCY RESPONSE SECTION: (CCIR: -20 dB) (NAB: -10 dB)	333 Hz 31.5 40 63 125 250 500 1 kHz 2 4 6.3 8 10 12.5 14 16 333 Hz	1 kHz 31.5 Hz 40 63 125 250 500 1 kHz 2 4 6.3 8 10 12.5 14 16 18 1 kHz			31.5 Hz 63 125 250 500 1 kHz 2 4 5 6.3 8 10 500 Hz	31.5 Hz 63 125 250 500 1 kHz 2 4 8 10 12.5 16 20 1 kHz		

4.2.1.6 Preparatory steps

Set all code switches of the PERIPHERY CONTROLLER to the correct setting (refer to Section 4.2.9.2!) before starting with the calibration.

Line level:
Adjust required level:

OPERATING LEVEL	PEAK RECORDING LEVEL	JS 5	JS 6
0 dBm	6 dBm	0	0
4 dBm	10 dBm	1	0
8 dBm	14 dBm	0	1
10 dBm	16 dBm	1	1

If a different value is desired:
Select next value and calibrate the line level with the level adjustments outlined below.

Checking the output level and the VU-meter:
Connect AF generator to the line input of channel 1 and feed in 1 kHz with operating level.
Connect AF millivoltmeter to line output channel 1 and load the output with 600 Ω (standard) or 200 Ω (minimum).

Switch recorder on and press the INP button of channel 1 and 2. Release all UNCAL buttons (calibrated level).

Adjust ouput level to operating level with the line amplifier trimmer accessible from the front.

Checking the VU-meter indication:
- VU indication: Operating level should result in a reading of 0 VU.
- PPM indication: Operating level should result in a reading of -6 (0 for reference level).

Correct the VU-meter reading with the trimmer potentiometer located on the back of the VU-meter amplifier.

On stereo recorders repeat the check for channel 2 in the same sequence.

Equalization:
Select the required equalization on the master panel (CCIR or NAB).

If the same calibration data (level, frequency response, bias) are desired for both types of equalization, proceed as follows:
- Select preferred equalization (master panel).
- Adjust and check all audio parameters according to the instructions.
- Set code switch 7: JS 7 = 1.
- Read out and reload all previously entered parameters. The same parameters are now stored for both equalizations.

The equalization time constants can be changed selectively for special situations. In this case it is essential to set the code switch 7 to the off position (JS 7 = 0)!

Tape type
Set tape type selector to the desired position or program it according to 4.2.9.1.

NOTE: Repeat the reproduce and record adjustments step-by-step for the second tape formulation.

4.2.1.7 Input keyboard

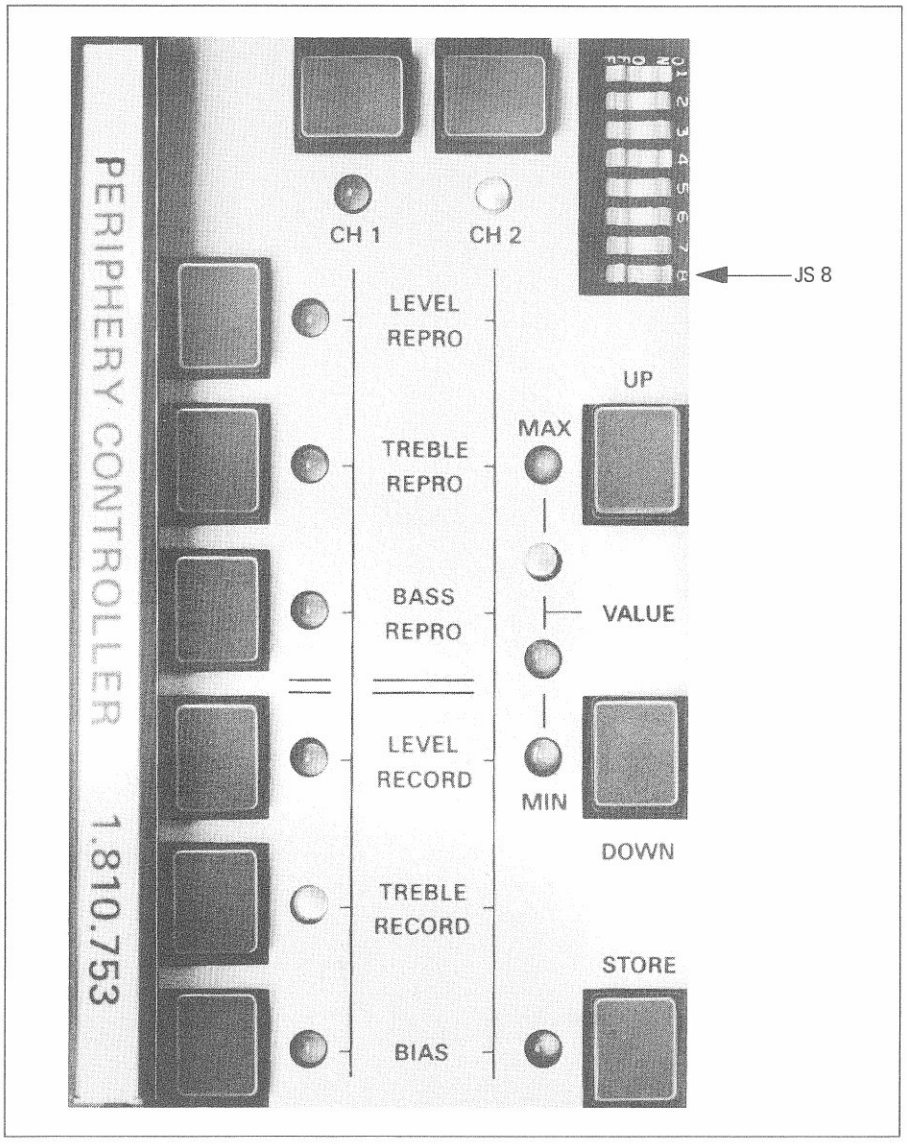

Set code switch 8 on: JS 8 = 1.

If, for example, the reproduce level of channel 1 is to be adjusted, it is necessary to first press CH1 and then LEVEL REPRO. The corresponding pilot lamps turn on and the tape timer display indicates e.g. AA 83 (LCD version) or AAA83 (LED version).

- AA(A) for audio alignment
- 83 specifies in hexadecimal format the number of steps from the completely closed reproduce level controller (131 decimal).

Readout of programmed value

The gain range of the various amplifiers can be adjusted in 255 steps between 0 and the maximum (corresponds to 256 discrete values).
Compared with a potentiometer, these 256 values correspond to the range between the cw and ccw stops.

The programmed value is indicated on the tape timer display. To conserve space it is displayed in hexadecimal format (00 for 0 and FF for 255).
A coarse reading can be obtained from the 4 indicator lamps (VALUE) on the input section.

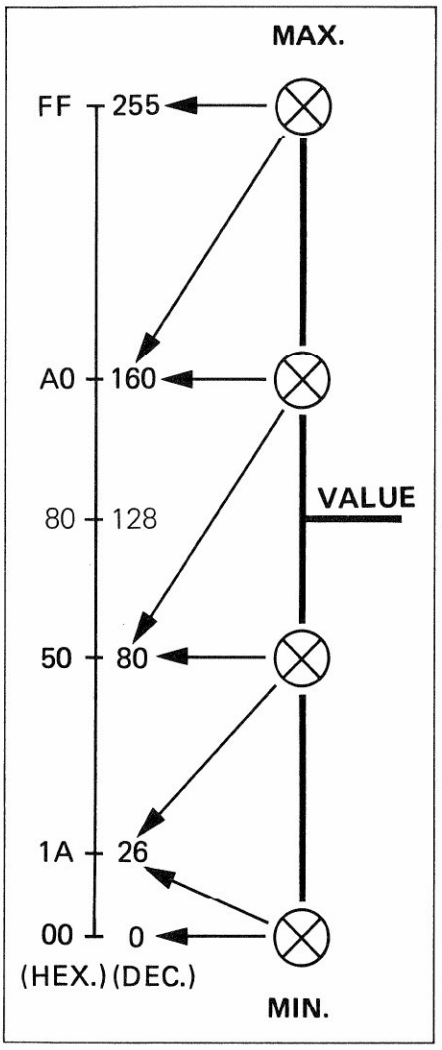

When the maximum value FF (255) is reached, the MAX lamp flashes, when 00 is reached, the MIN lamp flashes.

Examples of hexadecimal numbers:

DECIMAL :	0	1	2	3	4	5	6	7	8	9	10	11	12	13	14	15
HEXADECIMAL :	0	1	2	3	4	5	6	7	8	9	A	B	C	D	E	F

HEXADECIMAL	DECIMAL	% of FF (or 255, resp.)
1A	26	10
33	51	20
4D	77	30
66	102	40
80	128	50
99	153	60
B3	179	70
CC	204	80
E6	230	90

IMPORTANT

The hexadecimal values displayed should indicate to the user the range in which the corresponding amplifier is operating. No voltages can be derived from these numbers!

Modifying the parameters

Each time the UP key is pressed, the gain increases by 1/256th. It is decreased by 1/256th by pressing the DOWN key.

The UP or DOWN keys have the same effect as turning a potentiometer clockwise or counterclockwise.

If the UP or DOWN key are pressed continuously, the gain is varied in consecutive steps.

Example:

Push	Display
	AA(A)3C
UP	AA(A)3D
UP	AA(A)3E
UP	AA(A)3F
UP	AA(A)40
UP	AA(A)41
DOWN	AA(A)40
DOWN	AA(A)3F

In contrast to the adjustment with potentiometers, the original value stored in RAM can be reproduced exactly at any time by simply pressing the corresponding parameter key (e.g. LEVEL REPRO).

Storing the parameters

When the desired value has been reached (e.g. operating level 10 dBm = 2.5 V) it can be stored in RAM.
Press STORE key: the STORE indicator lamp turns on briefly to acknowledge that the parameter has been stored.

The hexadecimal values representing the amplifier setting can be entered on a log for comparison purposes.

Example:

A810 No.: 5 EQUALIZATION: NAB		TAPE SPEED 15. ips		7.5. ips		REMARKS
		CH1	CH2	CH1	CH2	
REPRO	LEVEL	7E	7Ø	8Ø	7A	
	TREBLE	A1 1)	9C	9F	9D	1) 6.3 kHz : - 1 dB
	BASS	85	77 2)	79	7D	2) 125 Hz : + 1 dB
	EQUAL.	44	44	87	87	
RECORD	LEVEL	8E	8C	9Ø	7F	
	TREBLE	83	79	7A	7E	
	BASS	88	9Ø	8Ø	8B	
	EQUAL.	BA	BA	82	82	
SYNC	LEVEL	73	75	84	8A	
	TREBLE	AØ	98	9C	9F	
	BASS	6B	6A	59	61	
	EQUAL.	44	44	87	87	

ERROR MESSAGE EE02 (LCD) or EEE02 (LED)

If the error message EE(E)02 appears during calibration, an error has probably occurred in the RAM or in its supply.

When the machine is switched off and on the next time, the parameters stored in PROM are automatically read.
"Degraded operation" is possible (refer to Section 2.7).
The recorder should be checked out by the nearest service agency as soon as possible.

4.2.2 Reproduce adjustments

4.2.2.1 Preparatory steps

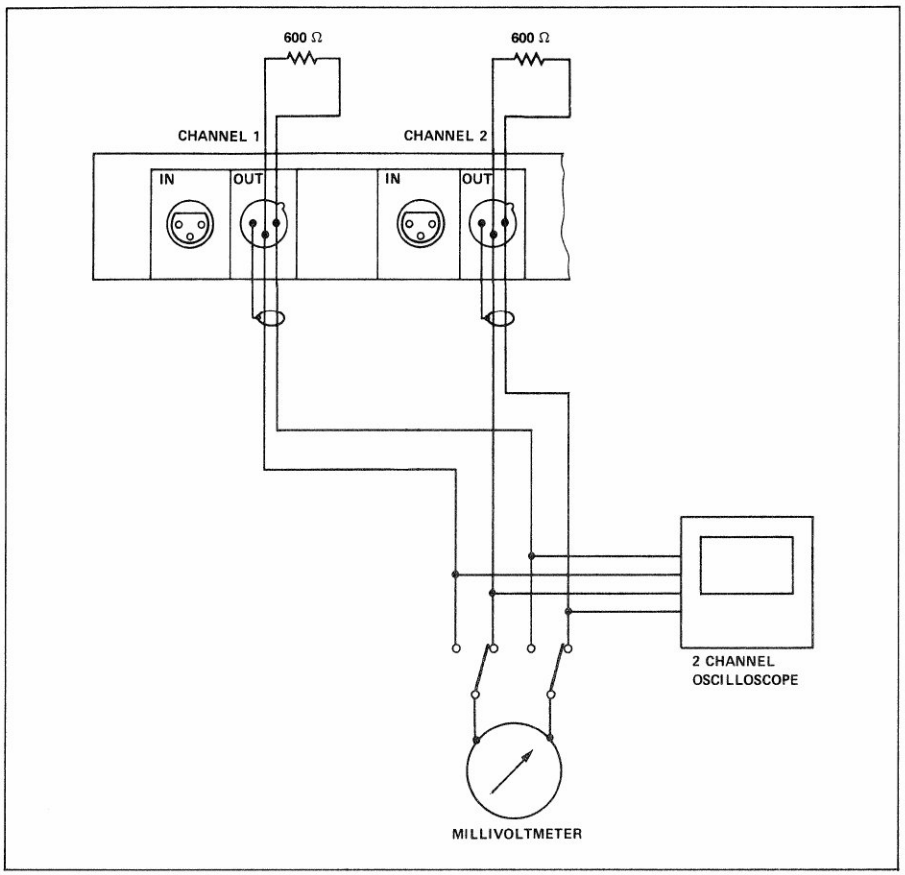

Connect AF millivoltmeter to line output channel 1. Load the line outputs for all measurements with 600 Ω (or 200 Ω, resp.).
Switch recorder on.
Select high tape speed.
Press SAFE and REP buttons of channels 1 and 2. Release all UNCAL buttons (calibrated level).
Mount calibration tape of the corresponding equalization and speed, and spool forward to the "REFERENCE LEVEL" section.

4.2.2.2 Reproduce level adjustment

Press CH 1 and LEVEL REPRO on the input keyboard.
Start recorder in play mode.
Read out reproduce level and adjust it to the desired line level by pressing the UP or DOWN key.
Press STORE.

On stereo recorders, connect the millivoltmeter to line ouput channel 2. Press CH2 and LEVEL REPRO. Adjust to the desired line level by pressing UP or DOWN.
Press STORE.

4.2.2.3 Azimuth alignment of the reproduce head

Spool calibration tape forward to the "AZIMUTH ALIGNMENT" section. The level of this section is approx. 10 dB below that of the reference level section.
Connect millivoltmeter to line output channel 1.
Start recorder in play mode.

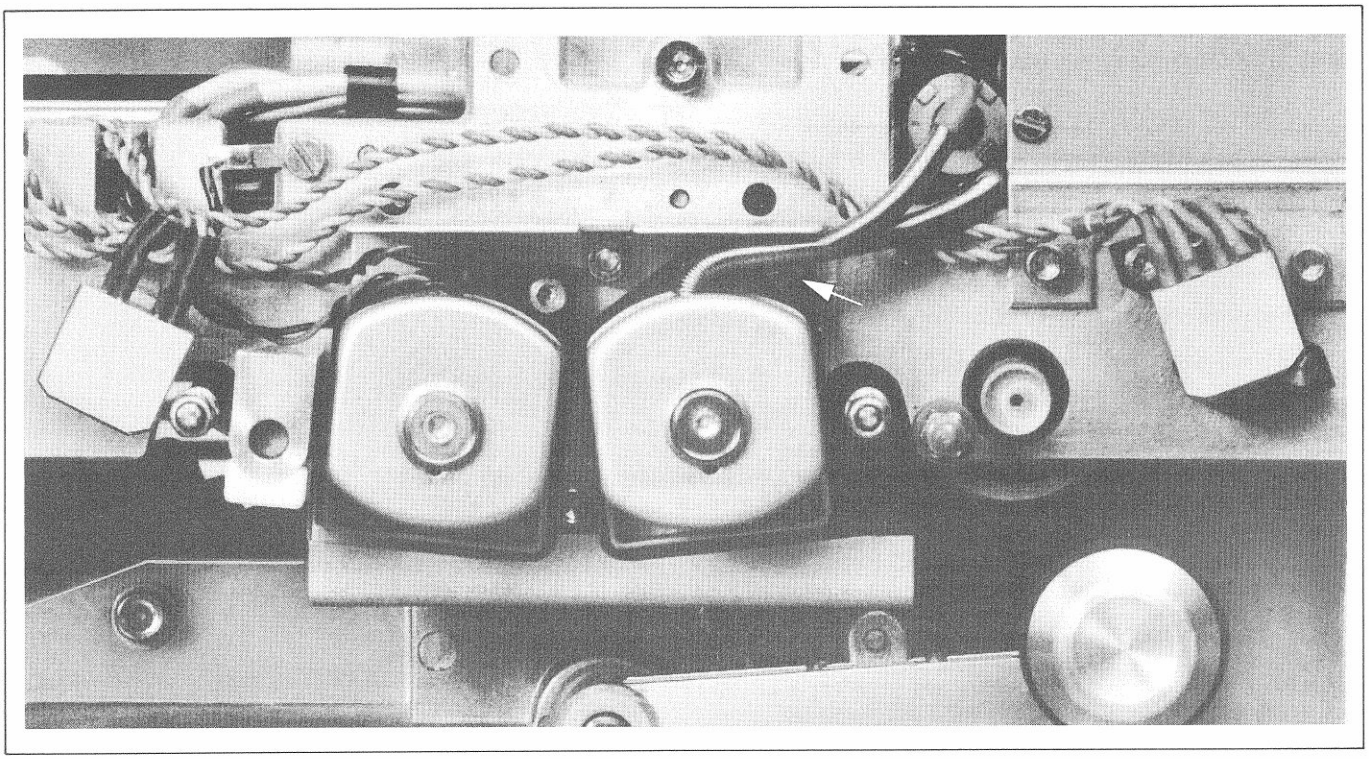

The coarse adjustment is made during the reproduction of the reference frequency. The fine adjustment is made during the reproduction with 10 kHz (8 or 16 kHz).
The alignment of the reproduce head is varied with the azimuth adjustment screw until the maximum output voltage and simultaneously the lowest level fluctuations are attained.

Stereo recorders are subsequently adjusted for minimum phase difference of the output signal, between channel 1 and 2 with the aid of an oscilloscope and by further correction with the azimuth adjustment screw of the reproduce head.

Important:
Always adjust to maximum level first and then to minimum phase difference!

Checking the level:
Rewind calibration tape to "REFERENCE LEVEL" section and start recorder in play mode. Check level of channels 1 and 2 and correct if necessary:
- CH1 (CH2), LEVEL REPRO
- UP or DOWN
- STORE.

4.2.2.4 Frequency response adjustment

Spool calibration tape forward to "TREBLE FREQUENCY RESPONSE" test section (16 kHz for 30 ips, 14 kHz for 15 ips, 12.5 kHz for 7.5 ips). The level of this section is approx. 20 dB (CCIR) below that of the reference level section. Connect millivoltmeter to line ouput channel 1.

Press CH1 and TREBLE REPRO on input keyboard.
Start recorder in play mode.
Adjust to optimum frequency response with UP or DOWN.
Press STORE.

On stereo recorders, connect the millivoltmeter to line output channel 2. Press CH2 and TREBLE REPRO. Adjust to optimum frequency response with UP or DOWN.
Press STORE.

Rewind calibration tape to "FREQUENCY RESPONSE 63 Hz" test section. The level of this section is approx. 20 dB lower than that of the reference level section.
Connect millivoltmeter to line output channel 1.

Press CH1 and BASS REPRO on input keyboard.
Start recorder in play mode.
Adjust for optimum frequency response with UP or DOWN.
Press STORE.

On stereo recorders connect millivoltmeter to line output channel 2. Press CH2 and BASS REPRO. Adjust for optimum frequency response with UP or DOWN.
Press STORE.

Note:
Strong fringing effects can occur at low frequencies if mono calibration tapes are used for the reproduce adjustment of stereo recorders. To ensure that a linear reproduce frequency response is attained, the reproduce adjustment of the bass frequencies must either be repeated with the record adjustment or if no record adjustments are planned, a calibration tape with correct track separation should be used!

The reproduce frequency response can be adjusted for special situations by slightly varying the time constant of the reproduce equalization.
This is accomplished as follows:

- Set program switch 7 off: JS7 = 0.
- Press CH1 (CH2).
- Hold down TRANS <REDUCED> continuously.
- Press TREBLE REPRO and release both keys. TREBLE REPRO status indicator lamp flashes.
- The time constant can be increased by pressing UP, i.e. the transition frequency is shifted toward the lower frequencies.
- The time constant can be decreased by pressing DOWN, i.e. the transition frequency is shifted toward the higher frequencies.
- Press STORE.

THEORETICAL EQUALIZATION ADJUSTMENTS		
TIME CONSTANT (µS)	TRANSITION FREQ. ±3 dB (kHz)	REPRODUCE HEX. VALUE
120	1.326	E5
90	1.768	A3
70	2.273	87
50	3.150	61
35	4.547	44
17.5	9.094	26

4.2.2.5 Adjustments for other tape speeds

The instructions in 4.2.2.2 through 4.2.2.4 are basically applicable for adjusting the other tape speeds (SLOW):

- Select slower tape speed
- Changeover equalization and tape type, if necessary
- Mount corresponding calibration tape.

Exceptions:

The reproduce frequency response is calibrated with different frequencies, depending on the tape speed:

ips	ADJUSTMENT FOR TREBLE REPRO kHz	BASS REPRO Hz
3.75	8	63
7.5	12.5	63
15	14	63
30	16	63

4.2.3 Record Adjustments

4.2.3.1 Preparatory steps

Mount new (or practically new) unrecorded tape.

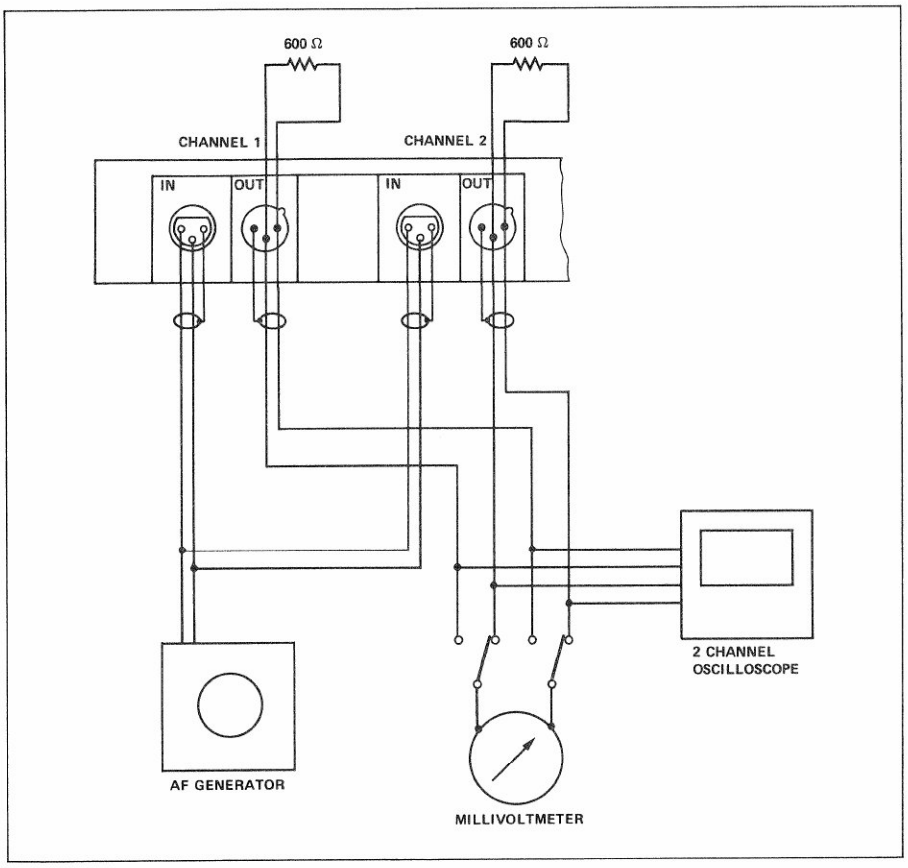

Connect AF generator with 1 kHz and line level to line input channel 1 (channels 1 + 2 on stereo models) and connect millivoltmeter to line output channel 1. A reference frequency of 700 Hz can be applied when aligning to NAB standards.
Switch recorder on and press READY and REP buttons of channels 1 and 2. Release all UNCAL buttons (calibrated line level). Select tape speed 7.5 ips or preferred studio speed.

4.2.3.2 Record level preadjustment

Press CH1 and LEVEL RECORD on input keyboard.
Recall output level and press UP or DOWN key for adjusting to line level.
Press STORE.

On stereo recorders connect millivoltmeter to line ouput channel 2. Press CH2 and LEVEL RECORD keys. Adjust output to line level by pressing UP or DOWN.
Press STORE.

4.2.3.3 Aligning the azimuth of the record head

Set AF generator to 10 kHz and decrease level by 20 dB.
Connect millivoltmeter to line output channel 1.
Start machine in record mode.

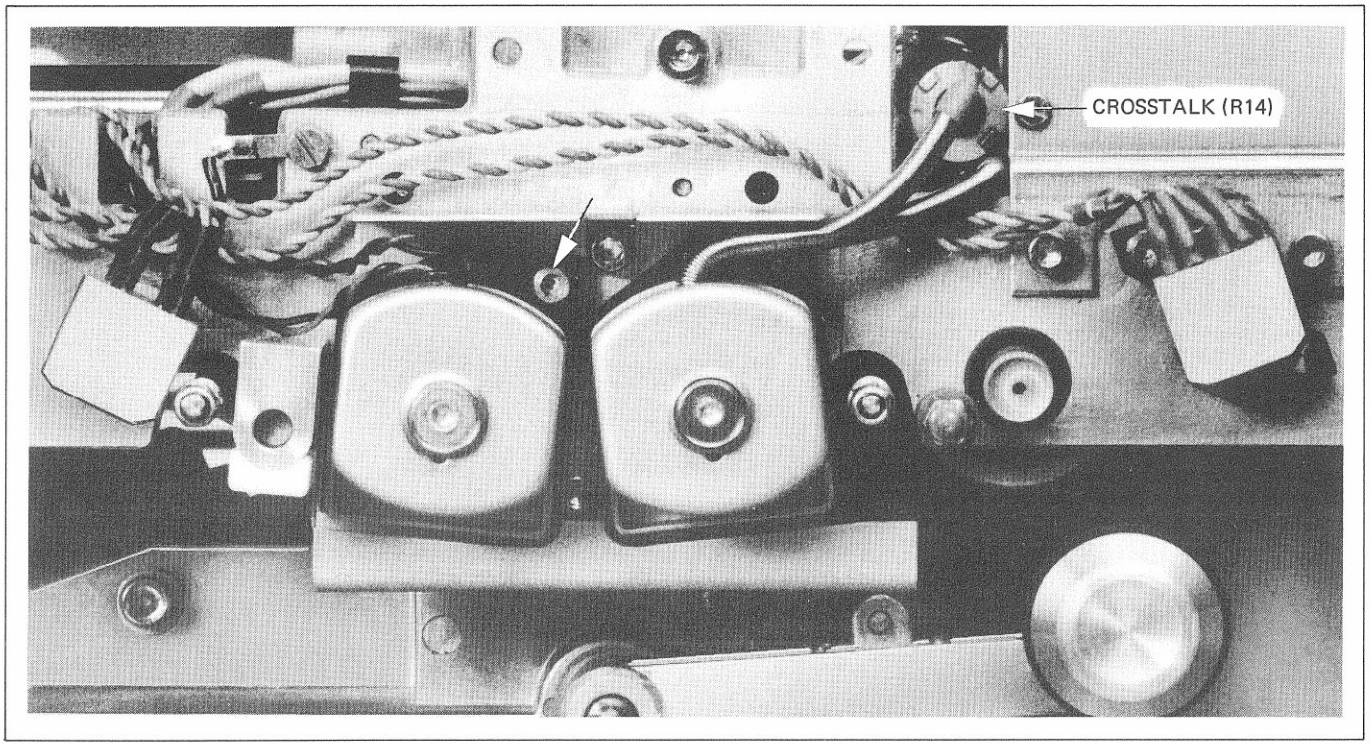

Correct the azimuth of the record head by turning the azimuth alignment screw until the highest ouput voltage and simultaneously the lowest level fluctuations are attained.

If significant correction of the azimuth alignment was necessary, repeat the record level preadjustment (Section 4.2.3.2)!

4.2.3.4 Bias adjustment

Set AF generator to 10 kHz and the level 20 dB below line level.
Connect millivoltmeter to line output channel 1.
Press CH1 and BIAS on input keyboard.
Start machine in record mode.
Continue to press DOWN key until the MIN lamp flashes.
Search the maximum output voltage with UP and write down this value.
Continue with UP until the value ΔU (dB) specified in the BIAS table is reached. This value depends on the tape formulation and the tape speed!

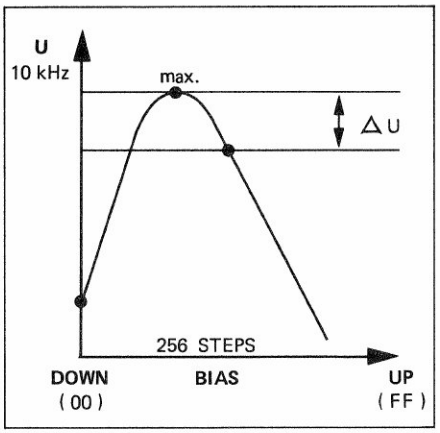

Refer to BIAS table at the end of this Section!
Press STORE.

On stereo recorders connect the millivoltmeter to line output channel 2. Press CH2 and BIAS. Adjust bias in the same way as described for channel 1.
Press STORE.

4.2.3.5 Azimuth alignment STEREO

Stereo recorders are adjusted for minimum phase difference of the output signals on channels 1 and 2 by carefully turning the azimuth alignment screw of the record head.

4.2.3.6 Record level adjustment

Set AF generator to 1 kHz (700 Hz) and operating level.
Connect millivoltmeter to line output channel 1.
Press CH1 and LEVEL RECORED on input keyboard.
Start machine in record mode.
Adjust to line level by pressing UP or DOWN.
Press STORE.

On stereo recorders connect the millivoltmeter to line output channel 2. Press CH2 and LEVEL RECORD. Adjust output level to line level with UP or DOWN.
Press STORE.

4.2.3.7 Frequency response adjustment

Set AF generator to line level -20 dB.
Connect millivoltmeter to line output channel 1.
Press CH1 and TREBLE RECORD on input keyboard.
Start machine in record mode.
Adjust to optimum frequency response (upward of 1 kHz) by pressing UP or DOWN.

Press BASS REPRO key and adjust to optimum frequency response (up to 1 kHz) by pressing UP or DOWN.
Press STORE.

Stereo recorders:
Connect millivoltmeter to line output channel 2.
Press CH2 and TREBLE RECORD on input keyboard.
Start machine in record mode.
Adjust to optimum frequency response (upward of 1 kHz) by pressing UP or DOWN.
Press STORE.
Press BASS REPRO key and adjust to optimum frequency response (up to 1 kHz) by pressing UP or DOWN.
Press STORE.

In special situations it is possible to correct the over-all frequency response by slightly shifting the time constant of the record equalization.
This is accomplished as follows:

- Set code switch 7 to off position: JS7 = 0.
- Press CH1 (CH2).
- Hold down TRANS <REDUCED>.
- Press TREBLE RECORD and release both keys. The TREBLE RECORD lamp flashes.
- The time constant can be decreased by pressing UP, i.e. the transition frequency is shifted toward the higher frequencies.
- The time constant can be increased by pressing DOWN, i.e. the transition frequency is shifted toward the lower frequencies.
- Press STORE.

THEORETICAL EQUALIZATION ADJUSTMENTS		
TIME CONSTANT (µS)	TRANSITION FREQ. ±3 dB (kHz)	RECORD HEX. VALUE
120	1.326	0E
90	1.768	4C
70	2.273	75
50	3.150	82
35	4.547	BA
17.5	9.094	DE

4.2.3.8 Cross talk adjustment (2-channel and stereo models only)

Connect AF generator (line level, 1 kHz) to line input channel 1 and connect millivoltmeter to line output channel 2. Switch both channels to READY and start machine in record mode.
Adjust to minimum cross talk with the aid of the CROSS TALK potentiometer (preamplifier on the headblock, R14, illustrated in Section 4.2.3.3).
Repeat the same measurement with interchanged channels. If pronounced differences occur, an optimum value has to be found for both channels.

4.2.4 Sync adjustments

Because sync reproduction is not supported for 3.75 ips, all parameters should be left at 00 for this speed.

4.2.4.1 Preparatory steps

Switch recorder off and wait 5 seconds.
Set jumper on REPRODUCE AMPLIFIER to NARROW (or to WIDE if wider frequency response is desired). Also refer to 4.2.9.4.

Connect millivoltmeter to line output channel 1.
Switch recorder on.
Select tape speed, tape type, and equalization.
Press SAFE and SYNC buttons of channels 1 and 2.
Release all UNCAL buttons (calibrated level).
Mount calibration tape of the corresponding speed and spool forward to the "REFERENCE LEVEL" section.

4.2.4.2 Sync reproduce level adjustment

Press CH1 and LEVEL REPRO on the input keyboard.
Start recorder in play mode.
Read out sync reproduce level and adjust it to the desired line level by pressing the UP or DOWN key.
Press STORE.

On stereo recorders, connect the millivoltmeter to line output channel 2.
Press CH2 and LEVEL REPRO. Adjust to the desired line level by pressing the UP or DOWN key.
Press STORE.

4.2.4.3 Frequency response adjustment

Spool calibration tape forward to the "FREQUENCY RESPONSE" section. The level of this section is approx. 10 dB below that of the reference level section.
Connect millivoltmeter to channel 1.

Press CH1 and TREBLE REPRO on input keyboard.
Start recorder in play mode.

TAPE SPEED ips	TREBLE FREQ. RESP. (TREBLE SYNC)
7.5	8 kHz
15	12.5 kHz
30	12.5 kHz

Adjust for optimum frequency response by pressing UP or DOWN.
Press STORE.

On stereo recorders, connect millivoltmeter to line output channel 2. Press CH2 and TREBLE REPRO. Adjust to optimum frequency response by pressing UP or DOWN.
Press STORE.

Rewind calibration tape to test section "FREQUENCY RESPONSE 63 Hz". The level of this section is approx. 10 dB below that of the reference level section.
Connect millivoltmeter to line output channel 1.

Press CH1 and BASS REPRO on input keyboard.
Start recorder in play mode.
Adjust to optimum frequency response by pressing UP or DOWN.
Press STORE.

On stereo recorders connect the millivoltmeter to line output channel 2. Press CH2 and BASS REPRO. Adjust to optimum frequency response by pressing UP or DOWN.
Press STORE.

Note:
Strong fringing effects can occur at low frequencies if mono calibration tapes are used for the sync reproduce adjustments of stereo recorders.
To ensure that a linear sync reproduce frequency response is attained, a calibration tape with correct track separation should be used!

The sync reproduce frequency response can be adjusted for special situations by slightly varying the time constant of the sync reproduce equalization.
This is accomplished as follows:
- Set program switch 7 off: JS7 = 0.
- Press CH1 (CH2).
- Hold down TRANS <REDUCED> continuously.
- Press TREBLE REPRO and release both keys. TREBLE REPRO status indicator lamp flashes.
- The time constant can be increased by pressing UP, i.e. the transition frequency is shifted toward the lower frequencies.
- The time constant can be decreased by pressing DOWN, i.e. the transition frequency is shifted toward the higher frequencies.
- Press STORE.

THEORETICAL EQUALIZATION ADJUSTMENTS		
TIME CONSTANT (µS)	TRANSITION FREQ. ±3 dB (kHz)	SYNC REPRO HEX. VALUE
120	1.326	E5
90	1.768	A3
70	2.273	87
50	3.150	61
35	4.547	44
17.5	9.094	26

4.2.4.4 Adjustments for the other tape speeds

The instructions in 4.2.4.2 through 4.2.4.3 are basically applicable for adjusting the other tape speeds (SLOW):
- Select corresponding tape speed
- Changeover equalization and tape type, if necessary
- Mount corresponding calibration tape.

4.2.5 Time code reproduction

Basically no electrical alignments are necessary for time code reproduction.

The alignments are limited to the mechanical adjustment of the left-hand and right-hand code heads. These are only necessary if the code heads have been replaced. The TC head alignment gauge kit (part No. 10.010.001.28) should be available. Accurate alignment of the heads is absolutely essential because of the narrow width of the code track (0.38 mm).

4.2.5.1 Preparatory steps

Check soundheads for contamination and clean them, if necessary. With the aid of a reference tape (in preparation) the height of the head can be adjusted in such a way that the maximum reproduce level is attained.
For this purpose it is necessary to mount the CODE READ/WRITE amplifier on an extender board (part No. 1.820.799.00).

CAUTION
Switch recorder off and wait at least 5 seconds before unplugging or inserting any printed circuit boards!

Time code reproduction in spooling mode is not feasible as long as the CODE READ/WRITE UNIT is mounted on the extender board!

The reproduce signal is measured before the limiter on the test point (B for PCB 1.820.721-00 and 1.810.724-00, or TP for PCB 1.820-721.81/82/83/84), preferably with an oscilloscope; the ground lead of the oscilloscope probe is to be connected to terminal 21 of the extender board.

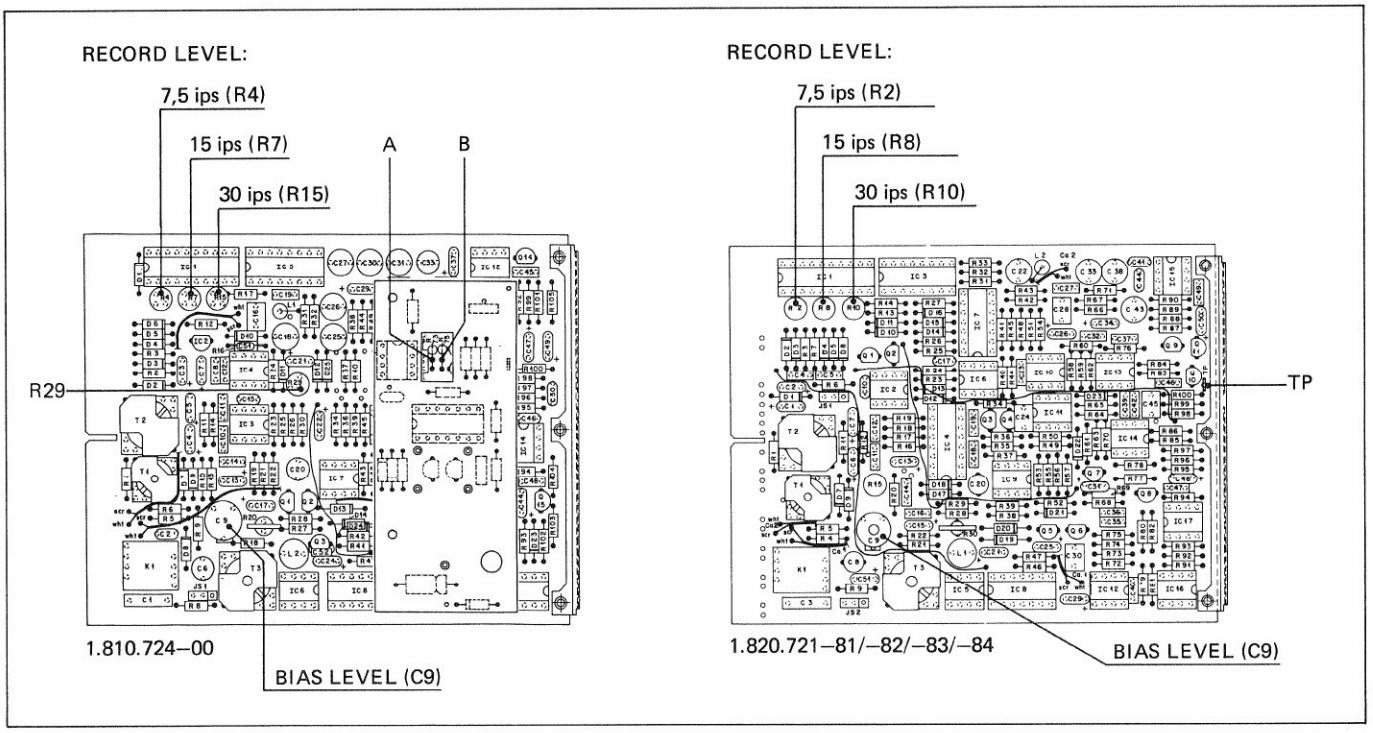

Mount time code reference tape, recording inhibited (SAFE).
Start recorder in play mode.

4.2.5.2 Checking the height of the heads

ONLY NECESSARY IF THE TIME CODE HEADS HAVE BEEN REPLACED!

First check the head height visually, then measure the voltage on test point B or TP.
On the left of the left-hand code head (audio erase head) alternately press with your finger slightly from the top and the bottom against the tape edge. The height is correct if the voltage decreases in both cases while the tape is being pressed.

Switch the recorder with TRANS <REDUCED> and < to the lowest tape speed and measure the voltage on test point B or TP. On the right of the right-hand code head (combination head) alternately press with your finger slightly from the top and the bottom against the tape edge. The height is correct if the voltage decreases in both cases while the tape is being pressed.
Should the measured voltage increase when the tape is pressed, it is necessary to correct the height of the head as follows:
at the left-hand code head with the aid of shims (0.1 mm, part No. 1.062.210.08),
at the right-hand code head by shifting the swivel plate.

4.2.5.3 Tape guidance

The right-hand time code head (combination head) must be positioned perpendicularly to the tape path. Lateral tilt or forward/backward inclination detected after the height alignment must be corrected by adjusting the swivel plate.
TC head alignment gauge kit, Part No. 10.010.001.28.
Recheck the height adjustment, if necessary!

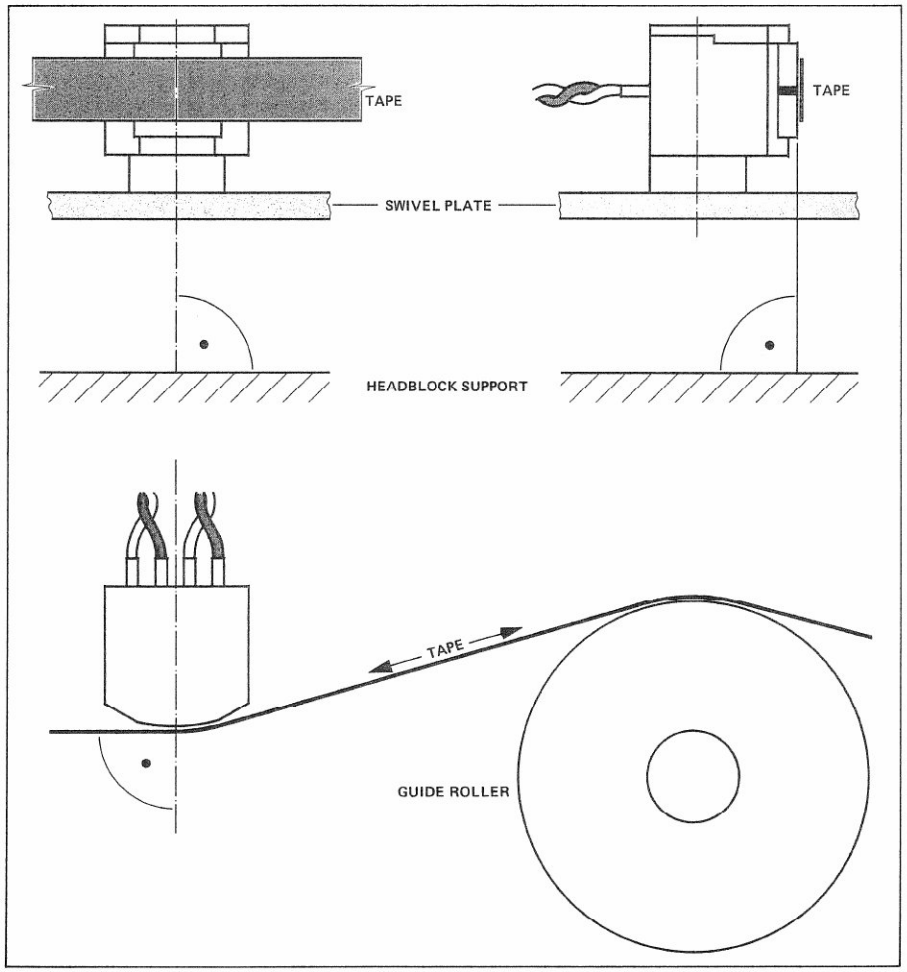

4.2.6 Time code recording

4.2.6.1 Preparatory steps

The record alignments can be made either with a time code signal or a square-wave signal. The square-wave signal offers the advantage that the image on the oscilloscope is stationary. However, it also means that the CODE DELAY UNIT must be removed and the jumper JS2 on the CODE READ/WRITE UNIT be changed to the "BYPASS" position.
Mount CODE READ/WRITE PCB on the extender board.

CAUTION
Switch recorder off and wait at least 5 seconds before unplugging or inserting any printed circuit boards! Time code reproduction in spooling mode is not feasible as long as the CODE READ/WRITE UNIT is mounted on the extender board!

Adjusting the input sensitivity
(only possible for 1.820.721.81/82/83/84)

Switch recorder on.
Set trigger level for time code line input:
- Connect square-wave generator (frequency 1 kHz) or time code generator to the time code line input. The output voltage of the generator should be the lowest voltage at which the line input and the code level pilot lamp should respond. (Factory setting: 0.5 Vpp, minimum input voltage approx. 150 mVpp).
- Turn trimmer potentiometer R15 on the CODE READ/WRITE UNIT clockwise until the CODE LEVEL lamp just turns on.

Setting the reference for the limiter
(only possible for 1.810.724)

Switch recorder to STOP.
With a digital voltmeter adjust for a voltage of -7.0 V (± 0.5 V) DC on test point TP A (R73 refer to drawing in 4.2.5.1) of the CODE READ/WRITE UNIT with the aid of potentiometer R29.

4.2.6.2 Adjusting the height of the right-hand code head (combination head)

- Mount practically new, unrecorded tape.
- Set bias trimmer C9 to its center position.
- Open record level trimmer clockwise by 1/3 of its travel (approx. 90°).

7.5 ips 19 cm/s	15 ips 38 cm/s	30 ips 76 cm/s	PCB
R4	R7	R15	1.820.721-00 1.810.724-00
R2	R8	R10	1.820.721-81 1.820.721-84

- Remove CODE DELAY UNIT, change jumper (JS1 for PCB 1.820.721-00 and 1.810.724-00, or JS2 for PCB 1.820-721-81/-82/-83/-84) on the CODE READ-/WRITE UNIT to the "BYPASS" position (if not already done)
- Select tape speed 15 ips.
- Connect square-wave generator 2 Vpp, 1 kHz, to all three line inputs and produce and recording of approximately 10 to 20 seconds duration.
- Spray iron oxide (MAGNETIC IRON OXIDE made by AEROSOLS INTERNATIONAL LTD., Part No. 10.555.001.00) onto a few centimeters of the recorded tape, coated side facing up.
- After the tape has dried measure the symmetry of the tracks with the aid of a measuring magnifier (Part No. 10.258.006.00). Correct the azimuth of the head if the deviation exceeds ±0.05 mm. Repeat recording and measurement until the specified symmetry is attained.

- To ensure the perpendicularity of the record head relative to the tape, the swivel plate may only be shifted symmetrically. Note the degree division of the hexagon-socket-screw key in the gauge set.
- The gauge 10.010.001.28 is absolutely essential for this alignment!

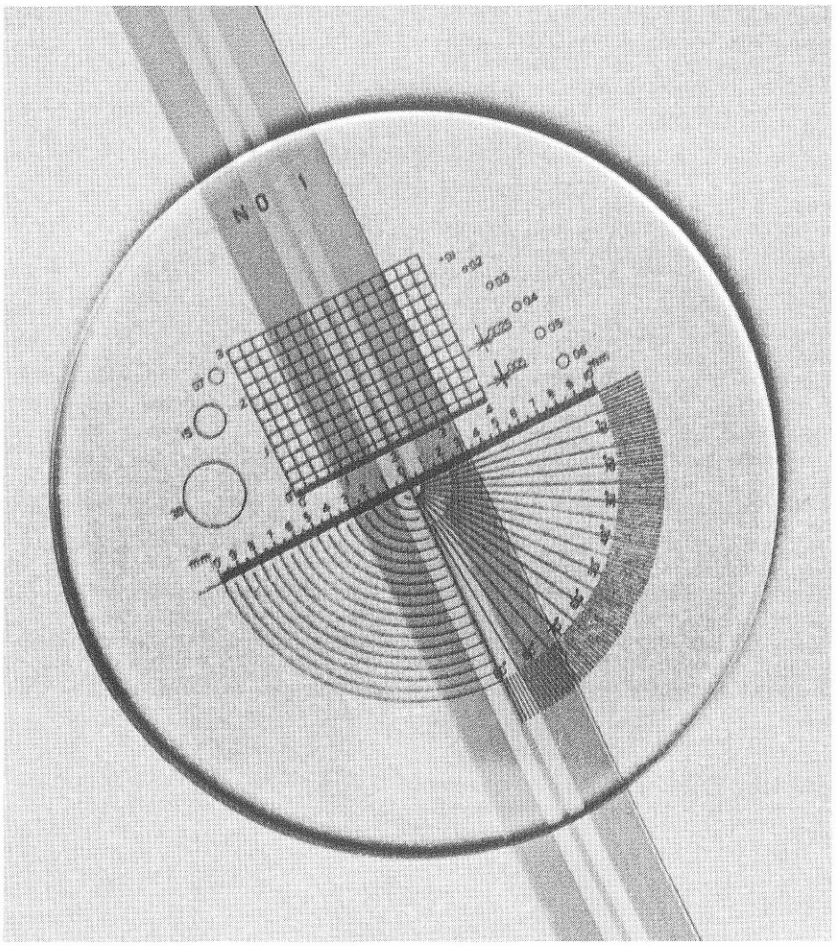

After the height alignment has been completed it is necessary to check the tape travel (4.2.5.3).

4.2.6.3 Preparatory steps

Press time code SAFE button (audio recording inhibited = SAFE).

Connect oscilloscope to test point B or TP. The ground lead of the oscilloscope probe is to be connected to terminal 21 of the extender board.
Mount time code reference tape (in preparation), wind forward to the 2nd part (time code, 729 nWb/m pp), switch recorder to PLAY, and measure the signal amplitude (peak-to-peak) with the oscilloscope on test point B or TP respectively.
Write down the measurement result.
(For standard values see below):

Standard value	PCB
700 mVpp	1.820.721-00
250 mVpp	1.810.724-00
180 - 300 mVpp	1.820.721-81/-84

If no time code reference tape is available, this measurement can be made by way of expedient by using a full-track audio calibration tape. Proceed as follows:

- Connect oscilloscope via an RC element to test point B or TP as illustrated in the diagram below.

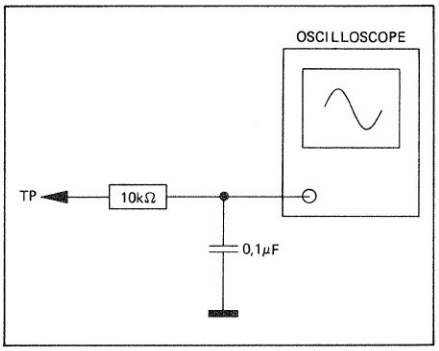

- Play level tone 1 kHz, measure signal amplitude (peak-to-peak), write down measured value.
- Multiply measured value with factor
  k = 1.3 if test tape with a flux of 200 nWb/m is used,
  k = 0.81 if test tape with a flux of 320 nWb/m is used
  in order to obtain the time code reproduce level (peak-to-peak) for a tape flux of 729 nWb/m.
- Write down computed value.

Mount practically new, unrecorded tape.
Press time code READY button.

4.2.6.4 Bias adjustment

- Set bias trimmer C9 to minimum capacitance.
- Open the record trimmer clockwise by 1/3 of the travel (approximately 90°).

7.5 ips 19 cm/s	15 ips 38 cm/s	30 ips 76 cm/s	PCB
R4	R7	R15	1.820.721-00 1.810.724-00
R2	R8	R10	1.820.721-81 1.820.721-84

- Connect square-wave generator (frequency 1 kHz) or time code generator with approximately 2 Vpp to the time code line input; CODE DELAY UNIT removed. JS1 or JS2 on CODE READ/WRITE UNIT in "BYPASS" position.
- Start machine in record mode. During the recording gradually increase the capacitance of C9 in intervals of 10 seconds until the rotor is plunged in by approximately 90°. In this way a recording is produced with different bias values.

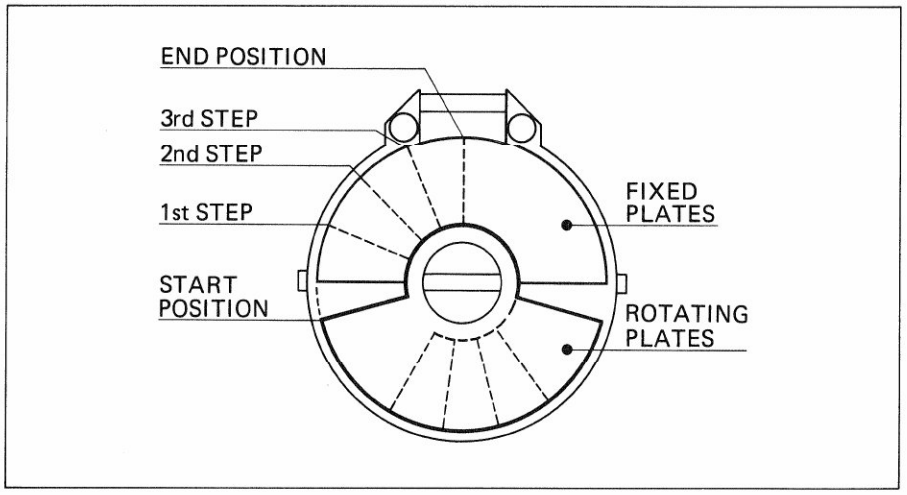

- Rewind to the beginning of the tape.
- Connect oscilloscope to test point B or TP, connect ground lead of the oscilloscope probe to terminal 21 of the extender board.
- Start recorder in PLAY mode.
- During the PLAY function check the position in which the greatest output amplitude is attained.
- Set C9 back to this position.
- Restart the recorder in PLAY mode, vary the setting of C9 in small steps near the previously found position.
- Determine the optimum setting of C9 i.e. the maximum amplitude and steepest signal edges by repeated experiments.

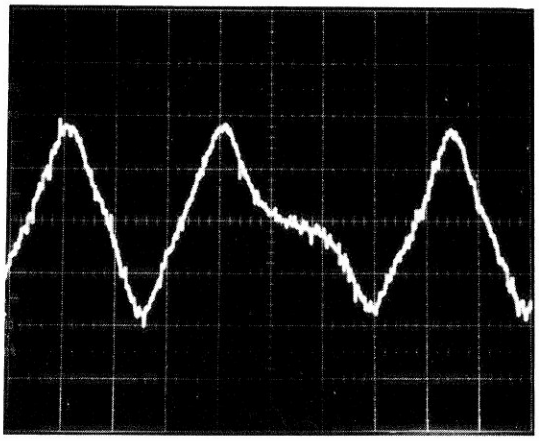

BAD

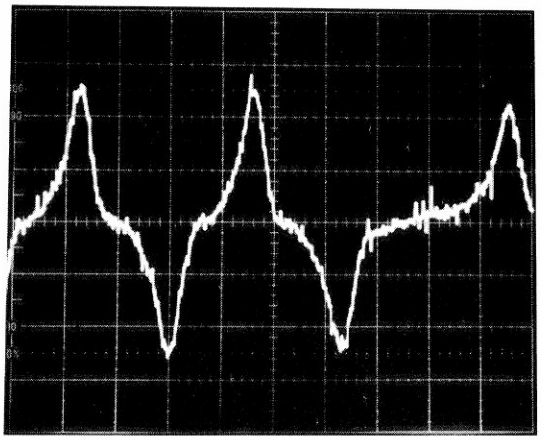

EXCELLENT

VERTICAL DEFLECTION : 0,2V/DIV.
TIME BASE : 0,2ms/DIV.

4.2.6.5 Record level adjustment

The record level is adjusted with the trimmer potentiometer for the corresponding speed in such a way that the reproduce level measured and noted in 4.2.6.3 is available on test point B and TP respectively.

7.5 ips 19 cm/s	15 ips 38 cm/s	30 ips 76 cm/s	PCB
R4	R7	R15	1.820.721-00 1.810.724-00
R2	R8	R10	1.820.721-81 1.820.721-84

PROCEDURE (for each tape speed):

- Mount new or practically new, unrecorded tape.
- Connect oscilloscope to test point B or TP respectively (ground to terminal 21 of the extender board).
- Start machine in RECORD mode, record during 20 seconds a square-wave signal with approx. 2 Vpp, 1 kHz (CODE DELAY UNIT removed, JS2 {JS1 for PCB 1.820.721-00 and 1.810.724-00} on the CODE READ/WRITE UNIT in "BYPASS" position, or record time code.
- Rewind to the start of the recording, start recorder in PLAY mode. The voltage on test point B and TP respectively should be the same as the value determined in 4.2.6.3.
- If this value is not attained, slightly vary the potentiometer setting of the corresponding speed.
- Repeat the foregoing procedure several times until this value is attained.

4.2.6.6 Checking the head gap position, reproduce

- Reinstall the CODE DELAY UNIT. Set jumper JS1 or JS2 respectively of the CODE READ/WRITE UNIT to the "NORMAL" position.
- Set DIL switch 0 (below operator panel) to the "NO OFFSET" position.
- Set DIL switches 1 and 2 (below operator panel) in accordance with the desired time code standard.
- Connect time code line output and line output of one of the two audio channels to the MASTER input or SLAVE input respectively of a synchronizer STUDER TLS4000 (or a time code reader with offset indication possibility).
- Mount time code reference tape (in preparation), spool to the first section (full-track time code), and start recorder in PLAY mode, speed 15 ips.
- Measure the offset between the audio channel and the time code channel.
- The offset should not exceed 2 ms (for 30 ips), 4 ms (for 15 ips) or 8 ms (for 7.5 ips). Should these values be exceeded, the offset can be reduced by turning the left-hand combination head.
- After this adjustment it is necessary to check the erase attenuation of the audio channels! A compromise may possibly have to be made between maximum erase attenuation and minimum time code offset.

If no equipment is available for measuring the offset, it may be assumed that the offset is smaller than 2 ms (for 30 ips), 4 ms (for 15 ips), or 8 ms (for 7.5 ips) if the erase attenuation is adequate and the record and the reproduce head gaps are adjusted correctly.

4.2.6.7 Checking the head gap position, via tape

- Connect time code generator in parallel to an audio channel and to the time code channel. Make a recording of about one minute duration.
- Rewind to the beginning of the recording and measure the offset between the audio channel and the time code channel with the same device as described in 4.2.6.6.
- The offset should not exceed 2 ms (30 ips), 4 ms (15 ips), or 8 ms (7.5 ips). If these values are exceeded, the offset can be reduced by turning the right-hand combination head.

IMPORTANT:
After a correction of the right-hand combination head (time code record head) it is necessary to make a new recording for checking the head gap position!
The tape must touch the head face approximately symmetrically, it should not be drawn across one of the edges!

4.2.6.8 Checking the time code reproduction in spooling mode

- Install CODE DELAY UNIT, set jumper JS1 or JS2 respectively to the "NORMAL" position. Set jumpers JS1 or JS2 to the "BYPASS" position if no code delay unit exists.
- Install CODE READ/WRITE UNIT without extender board.
- Connect time code generator to the TC line output.
- Select tape speed 7.5 ips
- Make a recording of about 10 minutes duration.
- Connect time code reader to TC line output
- Switch recorder to spooling. The recorded time code should be read correctly in both directions at maximum spooling speed!
- If the time code is not read correctly (too many drop-outs), the right-hand code head should be cleaned or possibly realigned. (The lifter may also have to be readjusted).

Cleaning the right-hand time code head:
- Remove the contamination in the grooves with the aid of a hard brush and clean the head with soundhead cleaner.

Checking the headface of the right-hand time code head
- Color the right-hand half of the right-hand time code head with a grease pen (Part No. 10.401.001.01).
- Move out the tape lifter by hand and press one of the spooling keys. Check the headface after approximately 1 to 2 minutes. The headgap should be in the wiped area.
  Should this not be the case, check the lifter alignment according to 3.3.3 or possibly shift the time code head sightly at the expense of the delay unit (offset measurement).

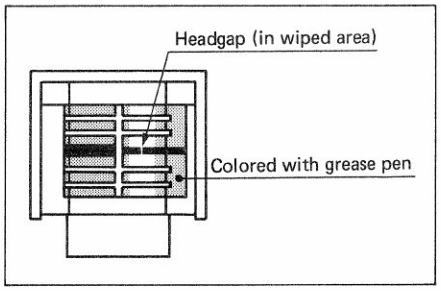

Important:
In spooling mode the CODE DELAY UNIT is automatically bypassed, i.e. the spooling offset is inherently greater than the specified value (max. 8 ms at 7.5 ips), regardless of whether the delay unit is installed or not!

4.2.7 External storage of the audio parameters

(only possible with serial remote control 1.810.751.00)

The content of the RAM can be copied for back-up purpose to an external medium, e.g. an audio tape. The data can also be recorded on an audio tape on the machine of wich the audio parameters are to be saved. A special command is available for comparing the data on tape with the RAM content in order to verify correct transmission.
In the following instructions we use the term SAVE for the process of copying the parameters from the RAM of the recorder to an external medium, the term VERIFY for the process of comparing the externally stored data with the content of the RAM in the recorder, and the term LOAD for the process of transferring the externally stored parameters into the RAM of the recorder.

4.2.7.1 Principle of saving the audio parameters

When the recorder receives the "SAVE" command, the microprocessor serially transmits all stored audio parameters to connector pins 4 and 6 of the 9-pin remote control connector. These terminals are balanced and floating. The level is approx. 3 V pp. A parallel load resistor can be connected between terminals 4 and 6 (50 Ω correspond to approx. 2 V pp) in order to match the output level.

For safety reasons, three complete copies of the data are transmitted (one correct copy is sufficient for reading in the data). The complete task takes approximately 30 seconds. During the SAVE process the message C0 C0 (LCD) or C0C0C (LED) appears on the tape timer display. The end of the task is indicated by the message CC CC (LCD) or CCCCC (LED) on the tape timer display.

The integrity of the audio parameters saved on tape can be checked with the "VERIFY" command. During verification the message d0 d0 (LCD) or d0d0d (LED) appears on the tape timer display. If the data have been transmitted correctly, the message dd dd (LCD) or ddddd (LED) is displayed; in case of an error the message EE 08 (LCD) or EEE08 (LED) appears.

4.2.7.2 Connecting the recorder to the remote control connector

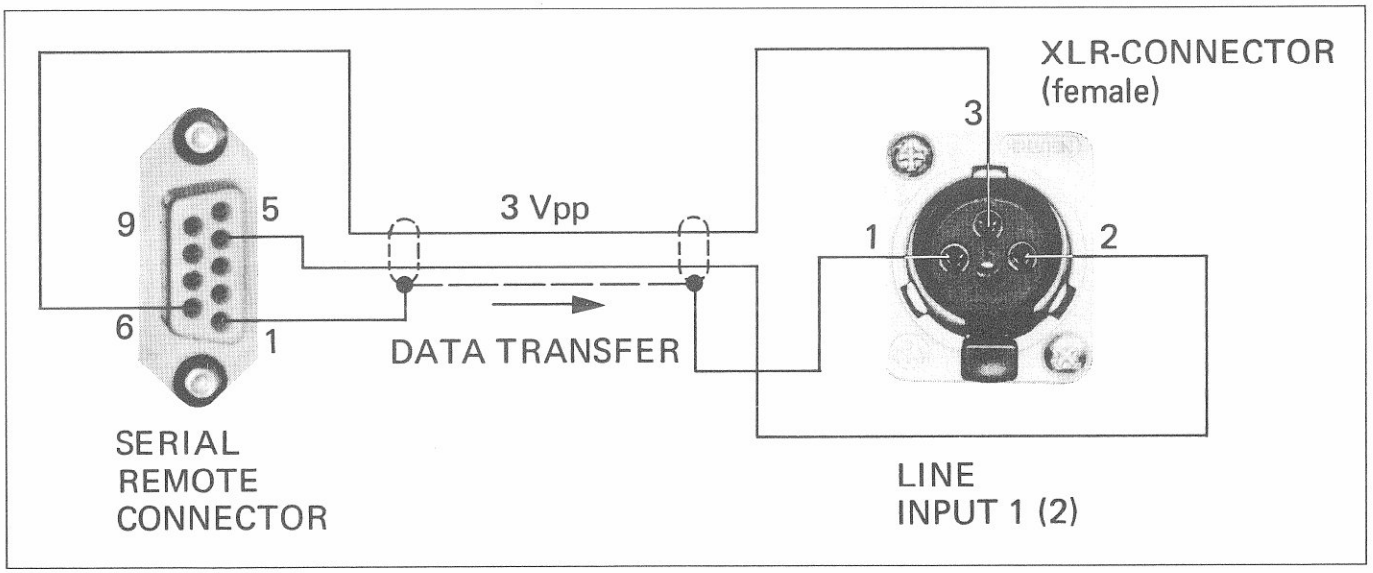

Unbalanced connection:
Lines 1 and 6 of the 9-pin connector are to be interconnected.

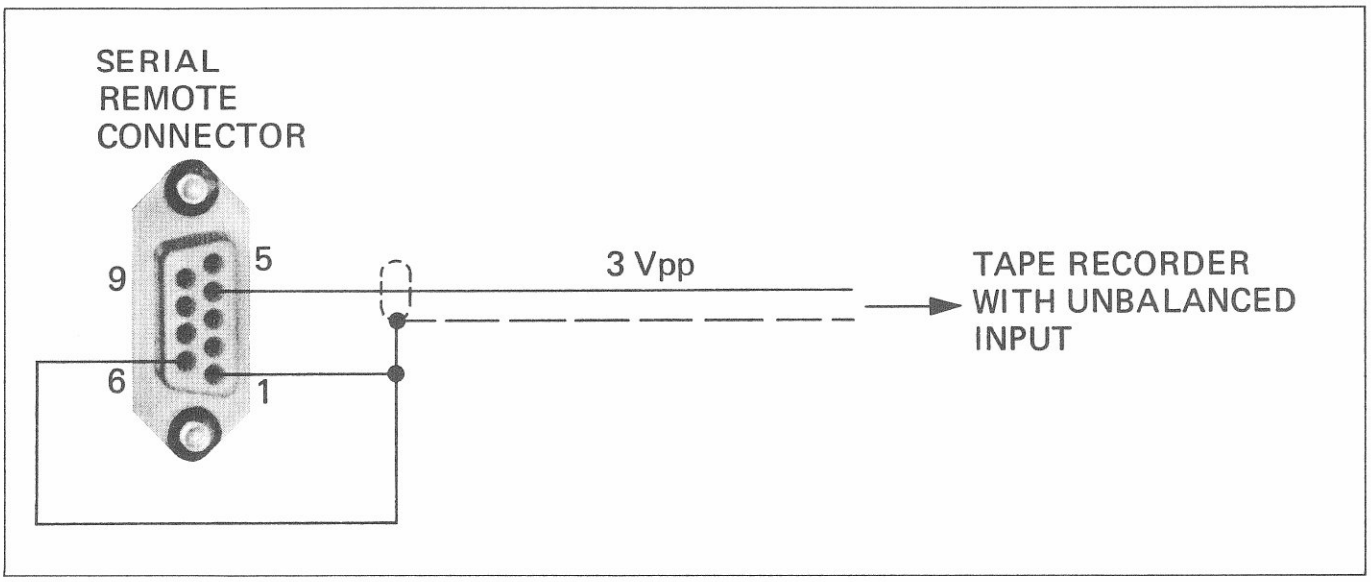

4.2.7.3 Preparatory steps

SAVE & VERIFY

The address board 1.810.739 (accessible from the back of the recorder) is to be programmed as follows:

- DIL switches 1 through 7 in "OFF" position
- DIL switch 8 in "ON" position
- Press MPU reset (on MP UNIT PCB 1.810.752/1.820.780) or switch recorder OFF and ON again.
- Select desired tape speed.
- Mount tape of the corresponding length (minimum recording time 30 seconds).
- Release UNCAL buttons (calibrated line level).
- Press READY button of the desired recording channel; even if the audio parameters are saved on a second recorder, a tape must nevertheless be mounted on the recorder whose parameters are to be saved, but the SAFE buttons are to be pressed.
- Plug data transmission cable into the serial remote connector and an audio input.

Note: Do not short-circuit the input and output of the same recorder via the data transmission cable.

4.2.7.4 Saving the audio parameters

Start the second machine (if any) in record mode.
Then start the recorder whose parameters are to be saved also in record mode (always press REC first, followed by PLAY, otherwise the machine starts in VERIFY or READ mode!)

- Display shows CO CO (LCD) or COCOC (LED) during the save process.
- After the data have been recorded (3 identical copies) the message CC CC (LCD) or CCCCC (LED) appears on the display.

If the message EE 07 (LCD) or EEE07 (LED) appears during the save process, an internal error has occurred in the data transmission, possibly because of a transient power failure. The save process has to be repeated.

4.2.7.5 Verification

The audio parameters saved on tape can be checked without influencing the RAM data:

- Switch settings on address board 1.810.739 as described in 4.2.7.3.
- Plug data transmission cable into the serial remote control connector and the LINE OUTPUT socket.

Note: If the other XLR connector of the data transmission cable is still in the LINE INPUT socket, it must first be unplugged.

Rewind tape with the saved audio parameters to the beginning.

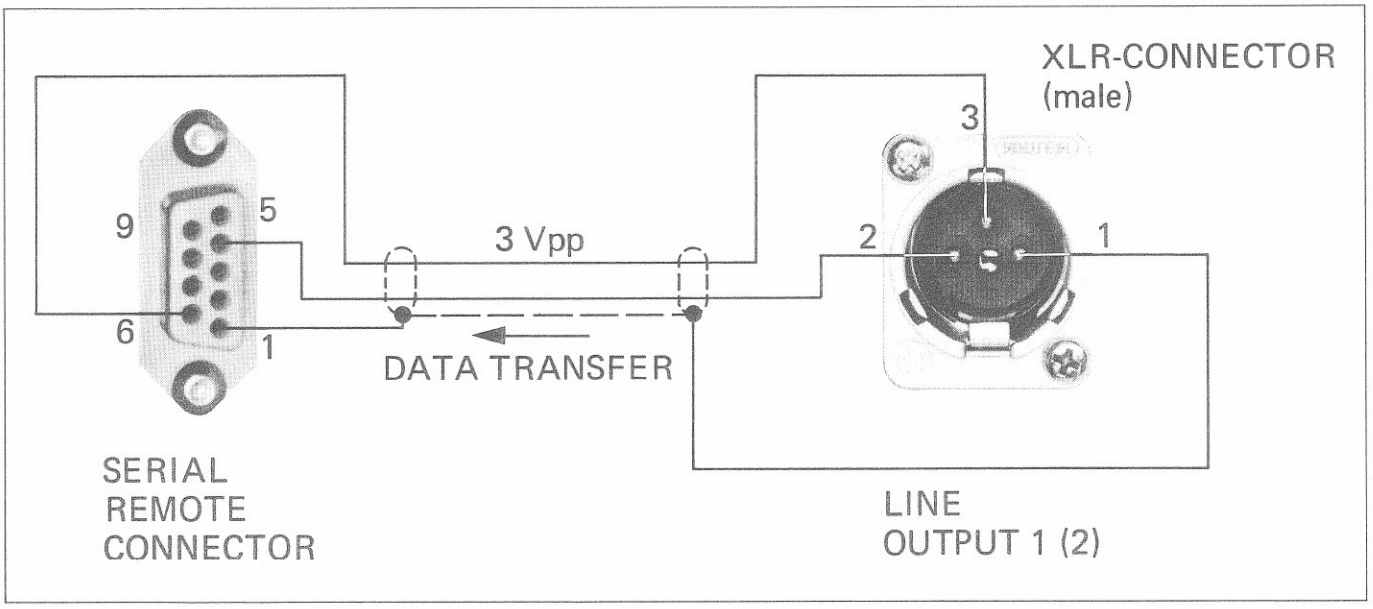

- Press PLAY key and also start the second recorder (if any) in PLAY mode.
- The display indicated d0 d0 (LCD) or d0d0d (LED) during the verification process.

If EE(E)08 appears, the stored data are corrupted. Check the second and possibly the third copy.

Reasons for incorrect data recording or reproduction:
- Wiring error with hum injection;
- Strong wow and flutter;
- Missing treble reproduction (treble control closed);
- Error in software 13/83 with LED display;
- Tape with data belonging to another machine has been mounted.

4.2.8 Reading in the audio parameters through the serial remote interface

4.2.8.1 Connecting the recorder to the remote control connector

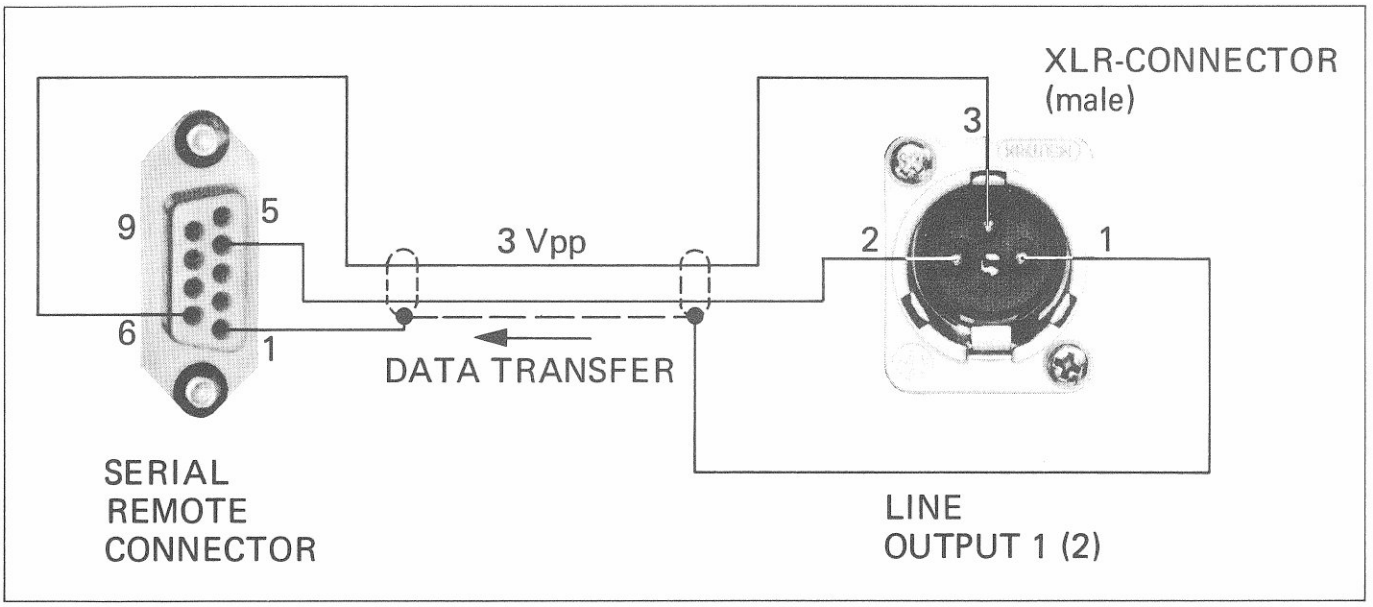

4.2.8.2 Preparatory steps

The address board 1.810.739 (accessible on the rear of the recorder) is to be programmed as follows:

- DIL switches 1 through 6 in "ON" position
- DIL switch 7 in "OFF" position
- DIL switch 8 in "ON" position

- Press MPU reset (on MP-UNIT PCB 1.810.752/1.820.780).
- Select tape speed.

Mount tape with the saved audio parameters (even if a second recorder is used, a tape must be mounted on the recorder that is reading the data so that the PLAY function can be enabled).

Caution
It is also possible to record data with SAVE & LOAD by starting the machine in record mode. However, the data stored in RAM can be destroyed if the recorder is unintentionally started in play mode rather than record mode and if the microprocessor by coincidence detects a valid label.

4.2.8.3 Loading the audio parameters

- Plug data transmission cable into the serial remote connector and into the LINE INPUT socket.

Caution: The other XLR connector must not be plugged into the LINE INPUT!

- Press PLAY key and start the second machine (if any) in PLAY mode.
- The display indicates bO bO (LCD) or bObOb (LED) during the loading of the audio parameters.
- When the data are loaded correctly into the RAM (without drop-out) the message bb bb (LCD) or bbbbb (LED) appears on the tape timer display.

If the microprocessor detects incorrect data, the message EE(E)06 is displayed, and the standard audio parameters held in the PROM are automatically transferred into RAM. In this case it is necessary to repeat the loading process.

- Restore the DIL switches on the address board 1.810.739 to their normal position, otherwise the next PLAY command will clear the memory (the recorder expects new audio parameters from tape).
- Press MPU reset on MP UNIT PCB 1.810.752/1.820.780 or switch the recorder OFF and ON again.

4.2.9 Programming the operating parameters

4.2.9.1 Code switches of the COMMAND UNIT

A microprocessor RESET must be initiated after the operating parameters have been changed with the code switches. Press RESET key of the MP UNIT or turn the power switch off and on again.

The 20 code switches JS 0 ... JS 19 are accessible on the rear of the COMMAND UNIT (lower front panel open).

JS 0 ... JS 2: Time code mode

MODE	FRAMES/s	JS 1	JS 2	JS 0
FILM STANDARD	24	0	0	
TV EURO STANDARD	25	0	1	
TV US STANDARD B/W	30	1	1	
TV US STANDARD COLOR	29.97	1	0	
Coincident audio/TC recording and reproduction		X	X	0
M15A-TC compatible recording and reproduction {1.2" (30 mm) offset}		X	X	1

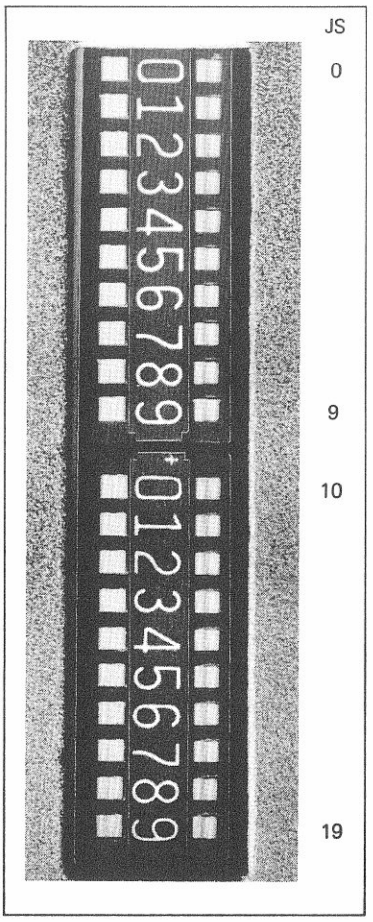

JS 3: LIFTER button

JS 3 = 0 ——> programmed as momentary button
JS 3 = 1 ——> programmed as flip-flop button

JS 4, JS 5: Drop-in / drop-out

The time offset of the drop-in can be disabled with JS 5 = 1 (erase and record head switch on concurrently).
The time offset of the drop-out can be disabled with JS 4 = 1 (erase and record head switch off concurrently).

JS 6 ... JS 8: Tape type selection

The A810 recorder can be calibrated for two different tape formulations. The manner of changeover for tape type "A" or "B" can be selected with the three code switches JS 6, 7, and 8.

TAPE TYPE	TAPE SPEED	JS 6	JS 7	JS 8
"A"	SLOW (3.75 / 7.5 ips)	1	X	0
"B"	SLOW (3.75 / 7.5 ips)	1	X	1
"A"	FAST (15 / 30 ips)	1	0	X
"B"	FAST (15 / 30 ips)	1	1	X
If the tape recorder is not equipped with a mono/stereo switch, the pushbuttons on the master panel can be reprogrammed as a tape type selector:				
TAPE TYPE SELECTOR		0	NO EFFECT!	
MONO/STEREO SWITCH		1	X	X

JS 9 ... JS 11: Tape speed

LS version with 2-speed panel:
Two of three different tape speeds can be programmed:
SLOW and FAST.
LS version with 3-speed panel:
The three lower speeds (3.75 - 7.5 - 15 ips) can be selected with the rotary switch on the master panel. The DIL switches JS9 through JS11 must be set to the "OFF" position.
HS versions:
All tape speeds can be selected with the rotary switch on the MASTER panel. JS9 through JS11 must be set to the "OFF" position!

The following tape speeds can be selected, depending on the capstan motor version:
3.75 7.5 15 30 ips
9.53 19.05 38.1 76.2 cm/s

TAPE SPEED SLOW (ips)	TAPE SPEED FAST (ips)	JS 9	JS 10	JS 11	CAPSTAN (No. of poles)	REMARK
3.75	7.5	0	0	1	4	
3.75	15	0	1	0	4	
7.5	15	1	0	0	4	STANDARD
15	30	1	1	1	2	special VERSIONS
4 SPEED VERSION		0	0	0	2	STANDARD FOR HS VERSIONS
3 SPEED VERSION		0	0	0	4	STANDARD FOR LS VERSIONS

JS 12: Drop-in

JS 12 = 0 ——> Drop-in with REC (provided recorder is already in PLAY mode).
JS 12 = 1 ——> Drop-in with PLAY + REC.

JS 13 ... JS 19: Programmable keys

The three function keys on the right of TRANS and LOC1 can be programmed with the DIL switches JS13 through JS19. For explanations of the possible functions refer to Section 1.2.

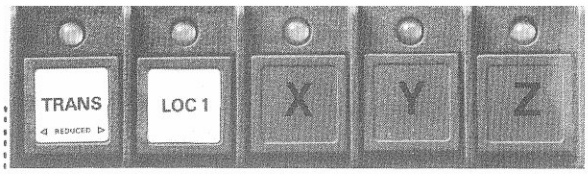

					CODE SWITCHES JS: 13	14	15	16	17	18	19
TRANS	LOC 1	LOC 2	LOC 3	LOC 4	0	0	0	0	0	0	0
TRANS	LOC 1	LOC 2	LOC 3	LOCST	0	1	0	0	0	0	1
TRANS	LOC 1	LOC 2	LOC 3	LIFTER	0	1	0	0	0	1	0
TRANS	LOC 1	LOC 2	LOC 3	FADER	0	1	0	0	0	1	1
TRANS	LOC 1	LOC 2	LOC 3	TAPDMP	0	1	0	0	1	0	0
TRANS	LOC 1	LOC 2	LOC 3	REMCTR	0	1	0	0	1	0	1
TRANS	LOC 1	LOC 2	LOC 3	CODREA	0	1	0	0	1	1	0
TRANS	LOC 1	LOC 2	LOCST	LIFTER	1	0	0	0	0	0	1
TRANS	LOC 1	LOC 2	LOCST	FADER	1	0	0	0	0	1	0
TRANS	LOC 1	LOC 2	LOCST	TAPDMP	1	0	0	0	0	1	1
TRANS	LOC 1	LOC 2	LOCST	REMCTR	1	0	0	0	1	0	0
TRANS	LOC 1	LOC 2	LOCST	CODREA	1	0	0	0	1	0	1
TRANS	LOC 1	LOC 2	LIFTER	FADER	1	0	0	0	1	1	0
TRANS	LOC 1	LOC 2	LIFTER	TAPDMP	1	0	0	0	1	1	1
TRANS	LOC 1	LOC 2	LIFTER	REMCTR	1	0	0	1	0	0	0
TRANS	LOC 1	LOC 2	LIFTER	CODREA	1	0	0	1	0	0	1
TRANS	LOC 1	LOC 2	FADER	TAPDMP	1	0	0	1	0	1	0
TRANS	LOC 1	LOC 2	FADER	REMCTR	1	0	0	1	0	1	1
TRANS	LOC 1	LOC 2	FADER	CODREA	1	0	0	1	1	0	0
TRANS	LOC 1	LOC 2	TAPDMP	REMCTR	1	0	0	1	1	0	1
TRANS	LOC 1	LOC 2	TAPDMP	CODREA	1	0	0	1	1	1	0
TRANS	LOC 1	LOC 2	REMCTR	CODREA	1	0	0	1	1	1	1
TRANS	LOC 1	LOCST	LIFTER	FADER	1	1	0	0	0	0	1
TRANS	LOC 1	LOCST	LIFTER	TAPDMP	1	1	0	0	0	1	0
TRANS	LOC 1	LOCST	LIFTER	REMCTR	1	1	0	0	0	1	1
TRANS	LOC 1	LOCST	LIFTER	CODREA	1	1	0	0	1	0	0
TRANS	LOC 1	LOCST	FADER	TAPDMP	1	1	0	0	1	0	1
TRANS	LOC 1	LOCST	FADER	REMCTR	1	1	0	0	1	1	0
TRANS	LOC 1	LOCST	FADER	CODREA	1	1	0	0	1	1	1
TRANS	LOC 1	LOCST	TAPDMP	REMCTR	1	1	0	1	0	0	0
TRANS	LOC 1	LOCST	TAPDMP	CODREA	1	1	0	1	0	0	1
TRANS	LOC 1	LOCST	REMCTR	CODREA	1	1	0	1	0	1	0
TRANS	LOC 1	LIFTER	FADER	TAPDMP	1	1	0	1	0	1	1
TRANS	LOC 1	LIFTER	FADER	REMCTR	1	1	0	1	1	0	0
TRANS	LOC 1	LIFTER	FADER	CODREA	1	1	0	1	1	0	1
TRANS	LOC 1	LIFTER	TAPDMP	REMCTR	1	1	0	1	1	1	0
TRANS	LOC 1	LIFTER	TAPDMP	CODREA	1	1	0	1	1	1	1
TRANS	LOC 1	LIFTER	REMCTR	CODREA	1	1	1	0	0	0	0
TRANS	LOC 1	FADER	TAPDMP	REMCTR	1	1	1	0	0	0	1
TRANS	LOC 1	FADER	TAPDMP	CODREA	1	1	1	0	0	1	0
TRANS	LOC 1	FADER	REMCTR	CODREA	1	1	1	0	0	1	1
TRANS	LOC 1	TAPDMP	REMCTR	CODREA	1	1	1	0	1	0	0

4.2.9.2 Code switches PERIPHERY CONTROLLER

The code switch JS 8 must be in the "ON" position before data is entered with the code switches JS 1 ... 7!

JS 1, JS 2: Erase head
The type of erase head is programmed as follows:

ERASE HEAD	JS 1	JS 2
FULL TRACK	1	0
TWO TRACK	0	1
WITH TIME CODE TRACK	1	1
NO RECORD	0	0

JS 3: Channel control on 2-channel recorders:
The SAFE, READY, INP, SYNC, REC buttons can be programmed to control the channels individually or in parallel:

JS 3 = 0 ——> INDIVIDUAL
JS 3 = 1 ——> PARALLEL

JS 4: Automatic muting during spooling (AUTO MUTE):
When MUTE is activated, the output is muted for 0.5 s when the function is changed from STOP to PLAY or REC.
When the STOP command is given in PLAY or REC mode, the output is muted until the blocking of the tape tension sensors is in effect.

On recorders equipped with the MPU 1.810.752:

JS 4 = SPARE (not used)

On recorders with the MPU UNIT 1.820.780:

JS 4 = 0 ——> AUTO MUTE off
JS 4 = 1 ——> AUTO MUTE on

JS 5, JS 6: Line level
The following line levels (operating level = peak level -6 dB) can be programmed for the inputs and outputs of the recorder:

LINE LEVEL	JS 5	JS 6
0 dBm	0	0
4 dBm	1	0
8 dBm	0	1
10 dBm	1	1

JS 7: CCIR/NAB equalization

JS 7 = 0 ——> Different audio parameters (bias, level, frequency response) for CCIR and NAB.
JS 7 = 1 ——> Identical audio parameters for CCIR and NAB.

This code switch must be set before the other audio parameters are programmed; it has no effect on previously stored parameters!

Important:
Because of the limited RAM capacity, only one equalization type can be stored for the two tape speeds 3.75 and 7.5 ips. Different levels, treble, bass, equalization, and bias for NAB and CCIR cannot be stored for these tape speeds.

JS 8: input keyboard for audio parameters

JS 8 = 0 —> Keyboard off, no scanning of program switches JS 1 ... 7 and no adjustment of the audio parameters possible.
JS 8 = 1 —> Keyboard on, scanning of program switches JS 1 ... 7

4.2.9.3 Code switches LINE AMPLIFIER

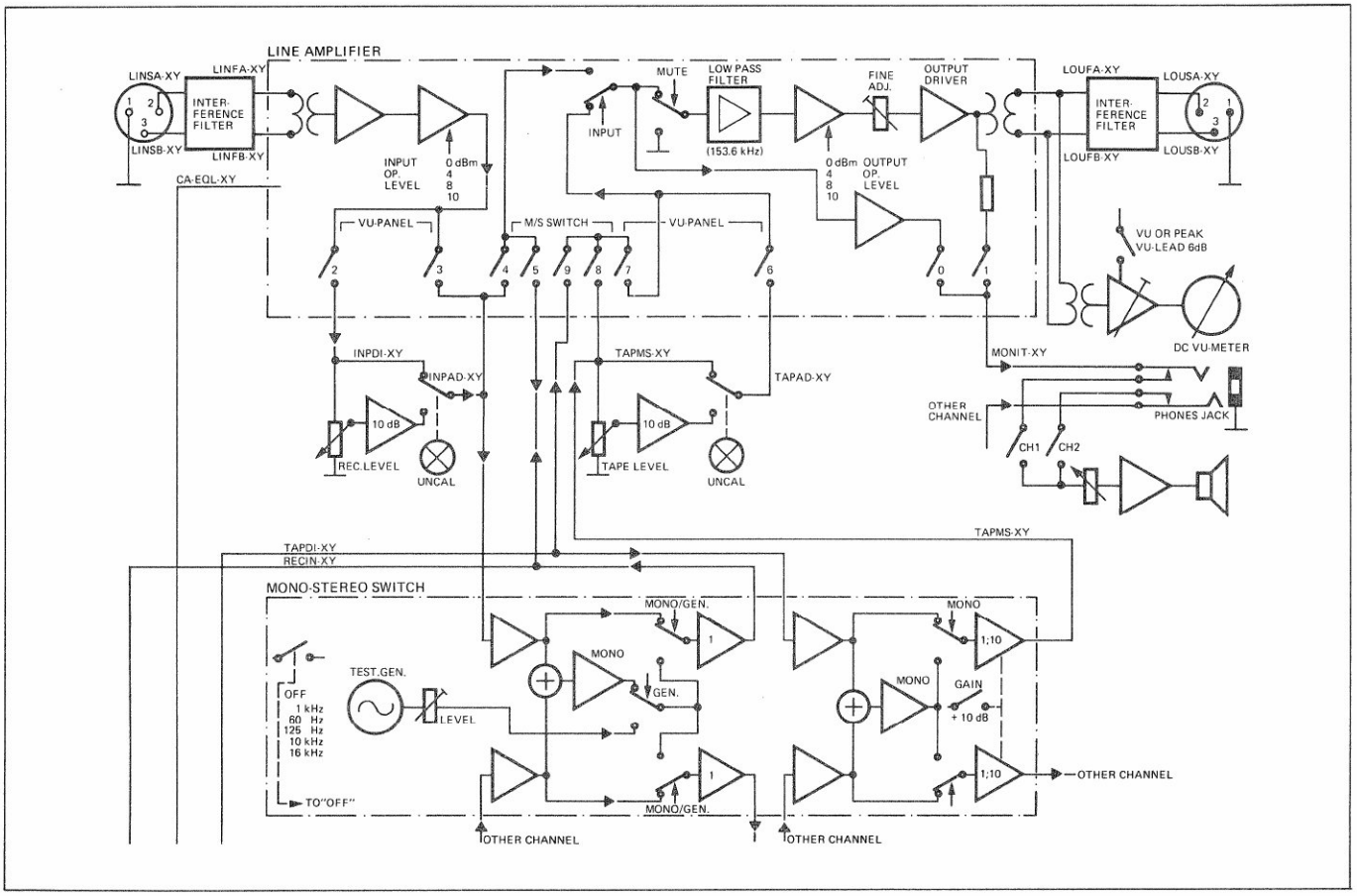

JS 0, JS 1: Connection of internal monitor and headphones output

Only possible for monitor speaker installed in recorder (below tape transport cover). Not applicable to VUK versions.

Connection to output amplifier:
JS 0 = 0
JS 1 = 1

Connection before muting:
JS 0 = 1
JS 1 = 0

Monitor and headphones disabled:
JS 0 = 0
JS 1 = 0

JS 2 ... JS 9: VU-meter panel, mono/stereo switch:

The DIL switches JS2 through JS9 are to be set in accordance with the recorder configuration.

EQUIPMENT	CODE SWITCHES JS: 2	3	4	5	6	7	8	9
NO VU PANEL, NO M/S SWITCH	0	1	1	1	0	1	0	1
WITH VU PANEL, NO M/S SWITCH	1	0	1	1	1	0	1	1
NO VU PANEL, WITH M/S SWITCH	0	1	0*	1*	0	1	1	0
WITH VU PANEL, WITH M/S SWITCH	1	0	0*	1*	1	0	0	0

* This switch position means that RECIN output of the mono/stereo switch can be heard when the output selector is in the INP position; if the input signal of the mono/stereo switch is to be tapped, set JS 4 = 1 and JS 5 = 0.

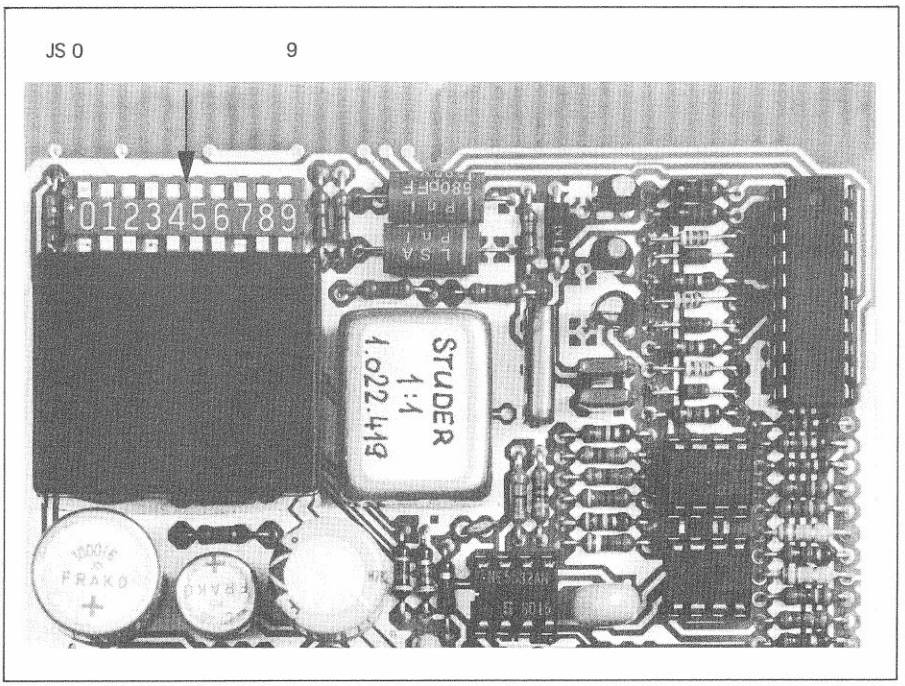

Note:

On recorders equipped with a mono/stereo switch, code switch 6 of the COMMAND UNIT must be JS 6 = 1!

4.2.9.4 Jumper REPRODUCE AMPLIFIER

The sync reproduce frequency response can be switched over from 12 kHz to 20 kHz.

Note:
Strong cross talk between the record channel and the sync reproduce channel is to be expected above 12 kHz.

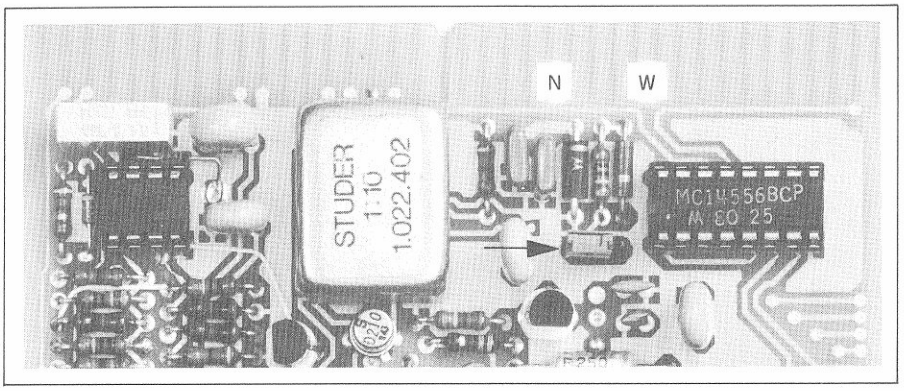

4.2.9.5 Jumper VU-meter amplifier

The indication mode can be selected separately for each meter (VU or PPM) with the jumper on the back of the VU-meter panel.

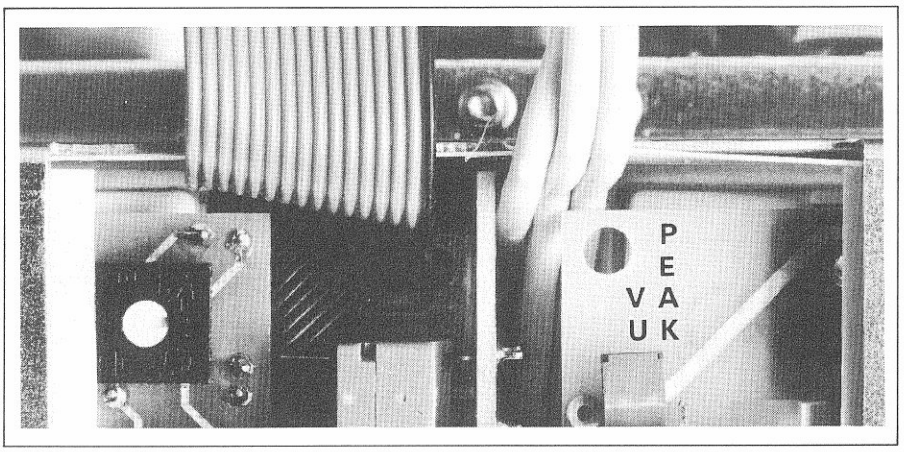

VU-indication according to IEC recommendation 268, Part 10, Section 4.

Peak program (PPM) indication according to IEC recommendation 268, Part 10, Section 3 (except 24, 1, scale division).

On console versions it is necessary to remove the VU-meter by unfastening the 4 mounting screws (front).

4.2.9.6 Jumper and code switches SERIAL REMOTE CONTROLLER

The jumper on the SERIAL REMOTE CONTROLLER must be in the "X" position on recorders equipped with the MP UNIT 1.810.752 or with the MP UNIT 1.820.780 and for software release date up to 13/83; for the MP UNIT 1.820.780, and software release date 40/85 or later, it must be in the "H" position.

JS 1 = 0 ——> BUS DISPLAY off
JS 1 = 1 ——> BUS DISPLAY on

For MP UNIT 1.810.752 and for MP UNIT 1.820.780 with software release date up to 13/83:

JS 2 = 0 ——> RS 232
JS 2 = 1 ——> saving data on tape

For MP UNIT 1.820.780 and software date 40/85 and later:

JS 2 = SPARE (not used, automatic switch-over)

JS 3 = SPARE (not used)

JS 4 = 0 ——> BUS DISPLAY indicates WRITE signals
JS 4 = 1 ——> BUS DISPLAY indicates READ signals

The code switches JS 5 ... 8 select the assemblies of which the status is to be indicated on the BUS display.

JS 5 = 0 ——> Status of COMMAND UNIT suppressed
JS 5 = 1 ——> Status of COMMAND UNIT on BUS DISPLAY

JS 6 = 0 ——> Status of TAPE DECK CONTROLLER suppressed
JS 6 = 1 ——> Status of TAPE DECK CONTROLLER on BUS DISPLAY

JS 7 = 0 ——> Status of PERIPHERY CONTROLLER suppressed
JS 7 = 1 ——> Status of PERIPHERY CONTROLLER on BUS DISPLAY

JS 8 = SPARE (not used)

4.2.9.7 Code switches SERIAL INTERFACE

A microprocessor RESET must be initiated after the operating parameters are changed with the code switches of the SERIAL INTERFACE.
Press RESET button of the MP UNIT or turn the power switch off and on again.

The code switches are accessible on the rear of the recorder (on the ADDRESS BOARD).

JS 1 ... JS 6:

- Operation with STUDIO bus (JS 7 = 1, JS 8 = 1; see below!):
  JS 1 ... JS 6 = any setting (device address)

- Operation with terminal (RS 232; JS 7 and JS 8 see below!):
  JS 1 ... JS 6 ≠ 100000: ECHO MODE = each character is transmitted back to the terminal
  JS 1 ... JS 6 = 100000: no ECHO MODE

  (≠ —> not=)

- Saving data (JS 7 = 0, JS 8 = 1; see below!):
  JS 1 ... JS 6 = 000000: SAVE & VERIFY, data to be saved on tape and verified
  JS 1 ... JS 6 = 111111: SAVE & LOAD, data to be saved on tape and loaded

JS 7, JS 8: Baud rate

ADDR. BOARD SWITCH	1	2	3	4	5	6	7	8	
9600 Bd with ECHO	0	0	0	0	0	0	0	0	
9600 Bd without ECHO	1	0	0	0	0	0	0	0	
1200 Bd with ECHO	0	0	0	0	0	0	1	0	
1200 Bd without ECHO	1	0	0	0	0	0	1	0	
1200 Bd SAVE & VERIFY	0	0	0	0	0	0	0	1	data saving
1200 Bd SAVE & LOAD	1	1	1	1	1	1	0	1	data saving
300 Bd with ECHO *	1	1	0	0	0	0	0	1	
300 Bd without ECHO *	1	0	0	0	0	0	0	1	

*DIL 1 ... 6 must be neither 000000 nor 111111 !

4.2.9.8 VU-meter panel internal or external

A jumper on the BUS CONNECTOR board defines whether an internal or external panel is used.

Access to this circuit board is gained by removing the rear panel of the recorder (disconnect power plug before removing the rear panel!).

The jumper must be in the INTERN position if neither a VU-meter panel nor a channel control unit is used!

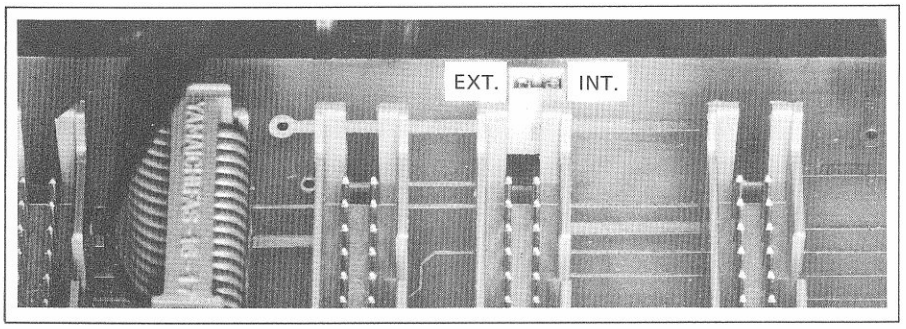

4.2.9.9 Jumpers MONO/STEREO SWITCH and/or TEST GENERATOR

Recorders equipped with a test generator but without mono/stereo switch require the electronics of the mono/stereo switch. In this case the signal TA-ACTMO must be pulled to ground with jumper JS 1. Operation without mono/stereo switch is simulated to the microprocessor so that the mono/stereo switch will not be accessed.

The record mode is defined by jumper JS 2: mono signals are either from the input of channel 1 only or the sum of the inputs channel 1 + 2.

The reproduce mode is defined by jumper JS 3: The aggregat signal of channels 1 + 2 can either be placed on channel 1 or to channels 1 and 2.

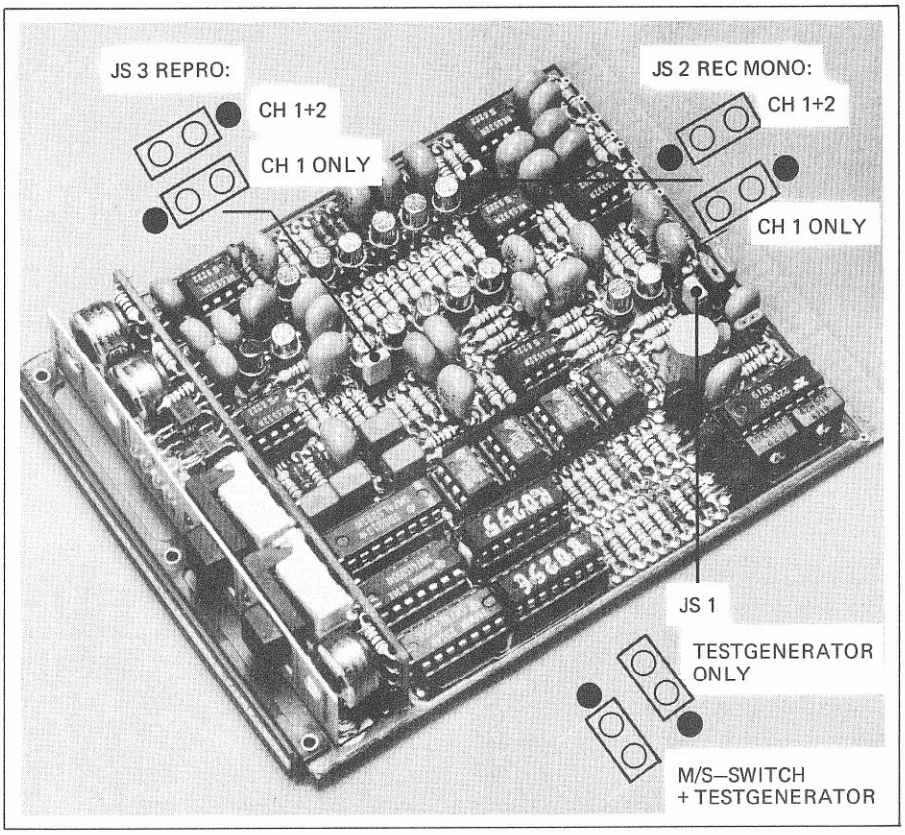

4.2.9.10 Jumpers TIME CODE READ/WRITE UNIT

The CODE LEVEL LED can be disabled with jumper JS1.

If the code channel is operated without the CODE DELAY UNIT 1.820.722, the delay input and output must be interconnected. This can be done via the serial remote controller, if configured (2.8.3) or with the jumper JS2 on the CODE READ/WRITE amplifier. In the second case the CODE DELAY UNIT must not be installed!

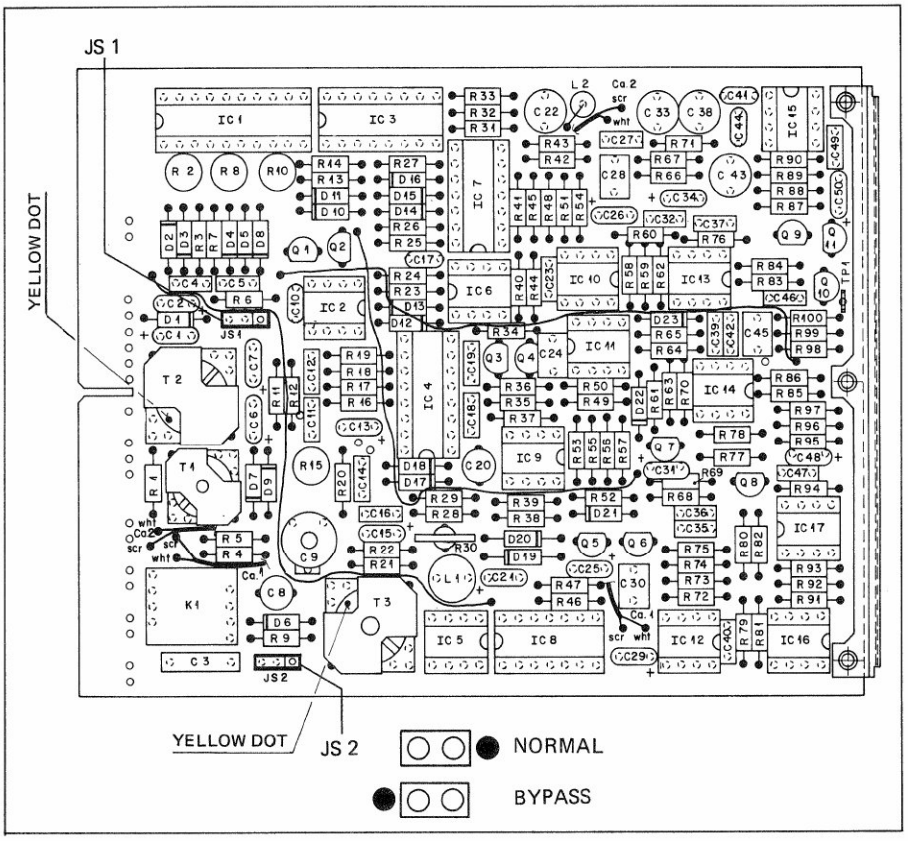

4.2.9.11 Jumpers TAPE DECK CONTROLLER

The jumper JS 1 is not used (SPARE).

The microprocessor controls the display decoder differently, depending on whether a liquid crystal (LCD) or LED tape timer display is installed. This changeover is effected with jumper JS2 (JS2 inserted {position A}: LCD display, JS 2 removed {or in position B}: LED display).

If jumper JS 3 is not inserted (or in position B), various tape transport monitoring functions are suppressed (necessary for mechanical transport adjustments according to Section 3.3).

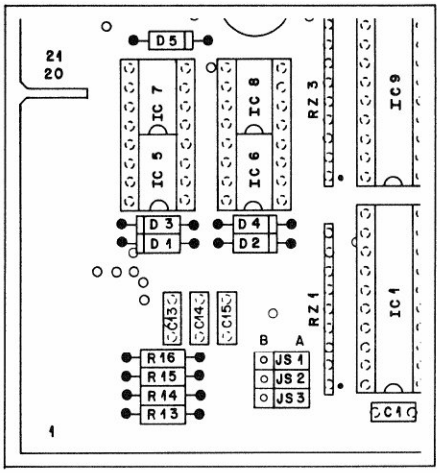

4.2.9.12 Jumpers CAPSTAN MOTOR CONTROL

JS 1: This jumper matches the control time constant for the 2-pole or 4-pole capstan motor.

JS 2: This jumper programs the capstan motor to switch off after TAPE OUT (no tape threaded or tape torn) in order to protect the bearings from unnecessary wear.

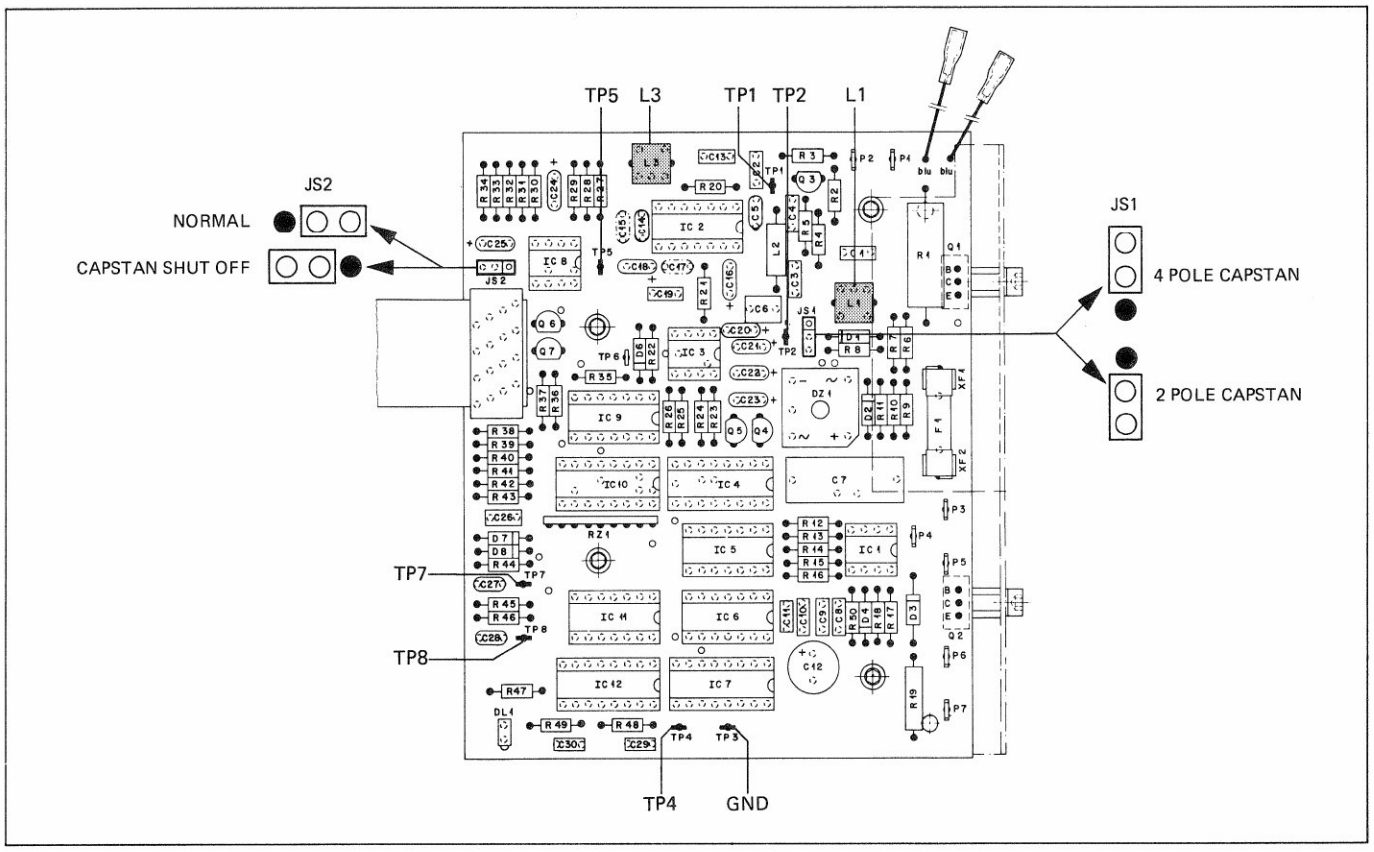

4.2.9.13 Jumpers VARISPEED CONTROL

JS 1: Position A: for operation with B67 recorder
Position B: for operation with A810/A812 recorder

JS 2: Position A: DL1 turns on when switch S1 is in "ON" position.
Position B: DL1 turns only on when the capstan speed corresponds to the selected nominal speed.
(Not possible on A810 because no feedback available).

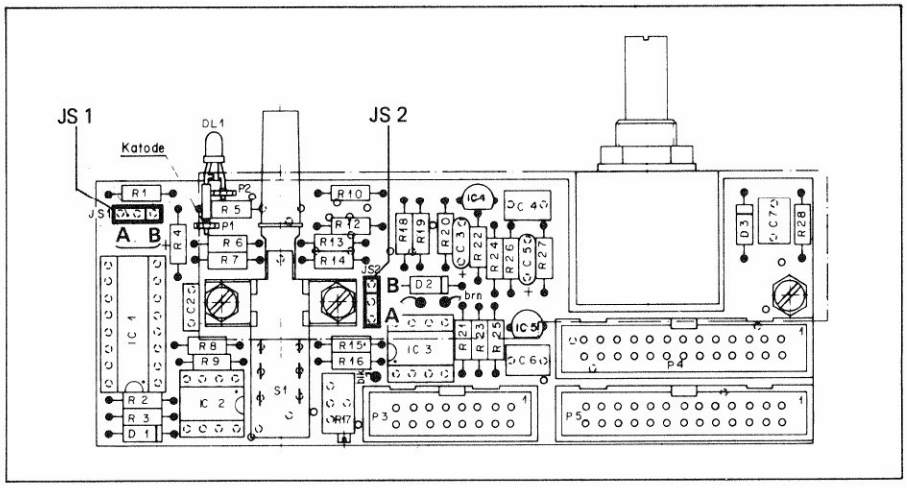

4.2.9.14 Jumpers TAPE TRANSPORT REMOTE CONTROL

1.328.200

Standard varispeed operation with external control frequency via BNC socket

Jumper positions:

1.328.201.00	1.328.201.81	Position
JS 3	JS 1	A
JS 1	JS 2	A
JS 2	JS 3	B

For varispeed mode press the varispeed key or the tape deck remote control: the yellow LED is on.

- The control frequency fed into the BNC socket varies the tape speed (9.6 kHz for nominal speed).
- When no control frequency is available on the BNC socket, the capstan motor slowly decelerates to a standstill when the varispeed button is pressed.

Varispeed operation in conjunction with integrated varispeed module
1.810.330.81 (option 20.810.871.00 or 20.810.872.00)

1. Setting (standard)

Jumper positions:

1.328.201.00	1.328.201.81	Position
JS 3	JS 1	A
JS 1	JS 2	A
JS 2	JS 3	B

On the integrated varispeed module 1.810.330.81 the varispeed button must be pressed (red LED is on).

For varispeed operation press the varispeed key of the tape deck remote control, the yellow LED turns on and the speed preset on the integrated varispeed module 1.810.330.81 is implemented. If the varispeed button is pressed a second time, the capstan is reset to the nominal speed.

Note:
Also on the integrated varispeed module 1.810.330.81 it is possible to change over between varispeed mode and normal mode, regardless of the varispeed key position of the tape deck remote control!

- If the varispeed key on the integrated varispeed module is not pressed (red LED off), the capstan motor slowly decelerates to a standstill when the varispeed button of the tape deck remote control is pressed.

If a control frequency is also available on the BNC socket (9.6 kHz for nominal speed), the following functions are possible:

1) Integrated varispeed module 1.810.330.81 switched off (red LED off).
   The tape speed is determined by the external control frequency when the varispeed button of the tape deck remote control is pressed.
2) Varispeed key of the tape deck remote control not pressed (yellow LED off). When the varispeed key of the integrated varispeed module 1.810.330.81 is pressed (red LED on), the tape speed is determined by the potentiometer setting.

Important:
If both keys are activated simultaneously (on the varispeed module and on the remote control), the two signals are mixed which means that an illegal condition results!

2. setting (without external control frequency):

Jumper positions:

1.328.201.00	1.328.201.81	Position
JS 3	JS 1	B
JS 1	JS 2	B
JS 2	JS 3	A

When the varispeed button of the integrated module is pressed, the yellow varispeed LED of the integrated varispeed module turns on regardless of the own push button position. The LED indicates the availability of an external capstan frequency (from the integrated varispeed module 1.810.330.81). The recorder runs with the speed defined by the potentiometer setting.
If the varispeed key of the remote control unit is pressed, the recorder switches back to the nominal speed.

From this moment the varispeed key of the tape deck remote control has the following function:

- When this key is held down, the recorder switches to the speed set with the integrated varispeed module
- When this key is released, the recorder switches back to the nominal speed.

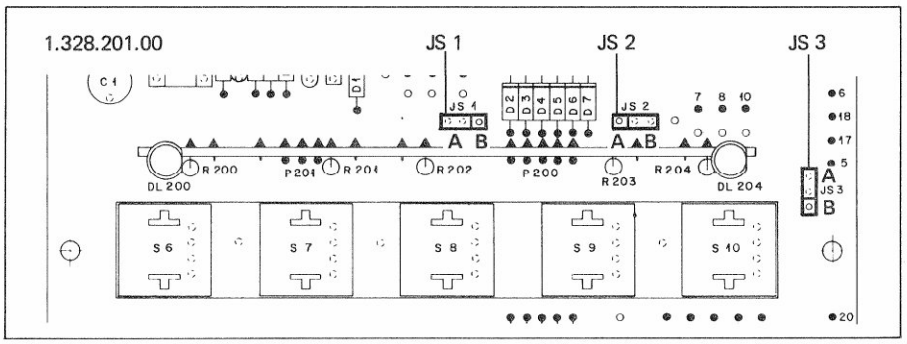

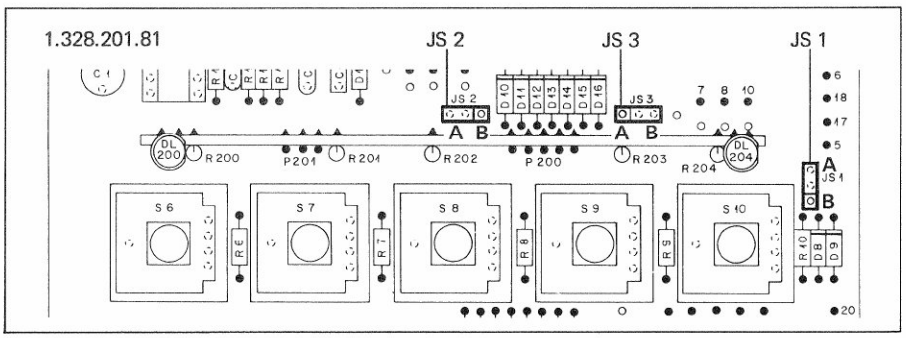

BIAS ADJUSTMENTS

Type of tape	ΔU [dB]			
	9,5 cm/s 3.75 ips	19 cm/s 7.5 ips	38 cm/s 15 ips	76 cm/s 30 ips
Agfa PEM 468	6	6	3.5	1.5
Agfa PER 525	6	6	3	1
Agfa PER 528	6	6	3.5	1.5
Ampex 406	6	5	3	1.5
Ampex 456 GRAND MASTER	5	6.5	3.5	1.5
BASF LGR 30P	6	6	4	1.5
BASF LGR 50P	6	6	4	1.5
BASF SPR 50LH/50LHL	6	5.5	3.5	1.5
BASF STUDIO MASTER 910	5	6	4.5	1.5
EMI 816/817	6	6.5	4	1.5
PYRAL CJ90	6	6.5	3.5	1.5
SCOTCH (3M) 206	5.5	5.5	3	1.5
SCOTCH (3M) 226	6	6	3.5	1.5
SCOTCH (3M) 250	5	6	3.5	1
SCOTCH (3M) 256	6	6.5	3.5	1
SCOTCH (3M) 263	6	6	3	1

SECTION 5 GENERAL DIAGRAMS (Power supply and control logic)

5.1	WIRING	5/1
5.1.1	Groups	5/1
5.1.2	Elements, connecting points	5/1
5.1.3	Main connection types	5/2
5.1.4	Conductor labeling, color scheme	5/3
5.1.5	Explanations to LOCATION PIN LIST	5/3
5.1.6	Explanations to SIGNAL WIRE LIST	5/4
5.2	SIGNAL NAMES	5/5
5.3	LOCATION PIN LIST, LOCATION SUMMARY	5/10
5.4	SIGNAL WIRE LIST	5/23
5.5	GENERAL DIAGRAMS	5/33
5.6	BLOCK DIAGRAMS	5/89

5.5 GENERAL DIAGRAMS

UNIT		PART NUMBER	GR/EL	PAGE
BLOCK DIAGRAM A810				5/33
SURVEY OF GROUPS				5/34
POWER SUPPLY		1.810.210-00	01...06	5/35
STABILIZER PCB		1.810.770-00	07	5/39
STABILIZER PCB		1.810.770-81	07	5/41
BASIS PCB		1.810.700-00/-81	20	5/43
BUS CONNECTOR PCB		1.810.701-00	25	5/45
MP UNIT A810 PCB	▲	1.810.752-00	20/01	5/47
MP UNIT A810 PCB	▲	1.820.780-00	20/01	5/49
- MP UNIT PCB	▲	1.820.752-00		5/49
- SOFTWARE A810	▲	1.100.521-00		5/50
MP UNIT A810 PCB	▲	1.820.780-81	20	5/51
-MP UNIT PCB	▲	1.820.752-81/-82		5/51
- SOFTWARE A810	▲	1.100.521-00		5/52
TAPE DECK CONTROLLER PCB		1.810.750-00/-81	20/02	5/53
- TAPE TENSION ADJUST PCB		1.810.725-00		5/55
COMMAND UNIT PCB (LED)	▲	1.810.734-00	21	5/57
- DISPLAY PCB (LCD)	▲	1.810.736-00	21/01	5/59
- LED DRIVER PCB (BASIC FUNCTIONS)		1.810.737-00		5/65
- LED DRIVER PCB (EXTENDED FUNCTIONS)		1.810.735-00		5/65
COMMAND UNIT PCB (LED OR LCD)	▲	1.810.767-00	21	5/61
- DISPLAY PCB (LED)	▲	1.810.768-00	21/01	5/63
- LED DRIVER PCB (BASIC FUNCTIONS)		1.810.737-00		5/65
- LED DRIVER PCB (EXTENDED FUNCTIONS)		1.810.735-00		5/65
PARALLEL REMOTE CONTROLLER PCB		1.810.738-00	23	5/67
- ADDRESS PCB		1.810.739-00		5/67
SERIAL REMOTE CONTROLLER PCB		1.810.751-00	20/03	5/69
- BUS DISPLAY PCB		1.810.757-00		5/69
PERIPHERY CONTROLLER	▲	1.810.753-00	20/04	5/71
- PERIPHERY CONTROLLER PCB	▲	1.810.756-00		5/71
- AUDIO ADJUSTMENT <EYBOARD PCB		1.810.755-00		5/71
BUS CONVERTER PCB	▲	1.810.754-00	20/05	5/73
MASTER UNIT, 2 SPEEDS		1.810.310-81	38	5/75
OR				
MASTER & MONITOR CONTROL UNIT, 2 SP.		1.810.315-81	38	5/75
- MASTER SWITCHING PCB, 2 SPEEDS		1.810.732-00		5/75
- MASTER CONTROL PCB, 2 SPEEDS		1.810.733-00		5/75
MASTER UNIT, 3 SPEEDS	▲	1.810.312-00	38	5/79
OR				
MASTER UNIT, 4 SPEEDS	▲	1.810.305-00	38	5/79
OR				
MASTER & MON. CTRL. UNIT, 3 SP.	▲	1.810.317-00	38	5/79
OR				
MASTER & MON. CTRL. UNIT, 4 SP.	▲	1.810.307-00	38	5/79
- MASTER SWITCHING PCB, 3/4 SPEEDS	▲	1.810.764-00		5/79
- MASTER CONTROL PCB, 3/4 SPEEDS		1.810.765-00		5/79
DISTRIBUTION PCB (EXT. VU PANEL)		1.810.720-00	90	5/83
NOISE REDUCTION SYSTEM CONTROL PCB		1.810.763-00/-81	90/02	5/84
PARALLEL REMOTE CONTROL PCB		1.328.201-00		5/85
PARALLEL REMOTE CONTROL PCB		1.328.201-81		5/87

ALL PCBs MARKED WITH THIS SIGN ▲ CONTAIN COMPONENTS SENSITIVE TO STATIC CHARGES.
PLEASE, REFER TO PREFACE BEFORE YOU REMOVE THESE BOARDS.

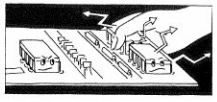

SURVEY OF GROUPS

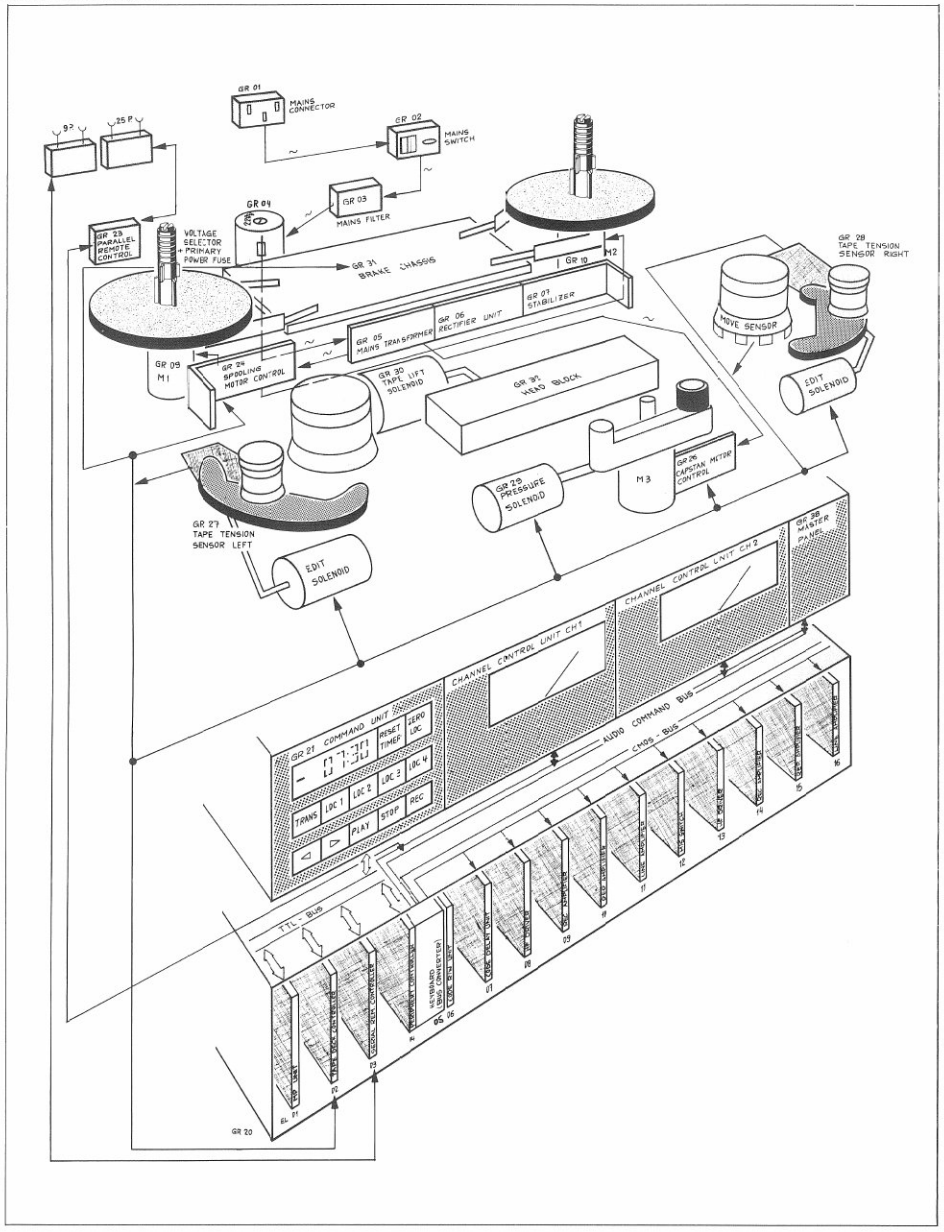

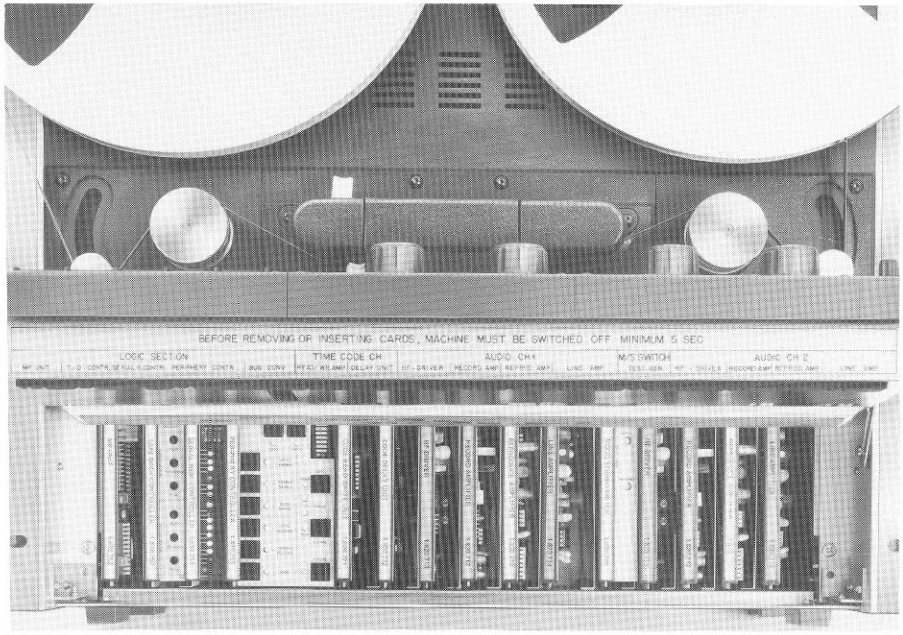

5.1
WIRING

Wiring diagrams for equipment with complex electronic circuits are difficult to follow and can lead to misinterpretations. Our documentation is, therefore, based on computer wiring lists. They give complete information on each electrical connection within the equipment.

To make the documentation more understandable, the power supply, the controls, the tape transport control, and the audio section have been split into groups (GR) and the groups into elements (EL) and connecting points (PT).

The signals are referred to by names that have been constructed from various abbreviations and from which the corresponding function can be recognized.

5.1.1
Groups

The electrical hardware of the A810 recorder is subdivided into 37 groups (GR). These groups are interconnected by cables and connectors that are identified with the corresponding group number. The group arrangement and the main interconnections are listed in the survey of groups (fold-out page on the left) and the block diagram (Section 5/33).

5.1.2
Elements, connecting points

Groups that comprise multiple PCBs or other elements are subdiveded into elements (EL). The connecting points (PT) are located on the elements.

5.1.3
Main connection types

Type	Description	STUDER No.
	Connector, D-type, crimp:	
A	contact pin, for thin stranded wires	54.02.0451
AA	contact pin, for heavy stranded wires	54.02.0455
B	contact socket, for thin stranded wires	54.02.0450
BB	contact socket, for heavy stranded wires	54.02.0454
	CIS connector:	
C	contact socket	54.01.0402
D	contact pin	54.01.0401
	MOLEX connector:	
F	contact socket, for thin stranded wires	54.02.0412
FF	contact socket, for heavy stranded wires	54.02.0413
G	Solder hook	29.21.6002
H	Wire/stranded wire, tinned (6 mm)	--.--.----
I	Connector, D-type, crimp, contact pin	54.02.1112
	Flat connector AMP FASTON, crimp, 0.8 * 6.3 mm:	
JM	contact, female, for thin stranded wire	54.02.0337
J	contact, female, for heavy stranded wire	54.02.0332
JJ	contact, female, for very heavy stranded wire	54.02.0338
K	Wire/stranded wire, stripped 8mm, tinned 1mm	--.--.----
L	Wire/stranded wire, tinned 4mm	--.--.----
M	MOLEX contact pin, for thin stranded wire	54.02.0411
MM	MOLEX contact pin, for heavy stranded wire	54.02.0410
MY	AMP flat connector (blade)	54.02.0344
N	CIS connector, contact pin	54.01.0225
O	Contact spring to EURO card connector strip	54.01.0376
	PCB contact strip:	
P	contact strip, for thin stranded wire	54.06.4512
PP	contact spring, for heavy stranded wire	54.06.4510
Q	Socket strip, contact socket	54.01.0451
R	Connector, D-type, crimp, contact socket	54.02.1111
S	Wire/stranded wire, stripped 4mm and tinned	--.--.----
T	TERMI-POINT connector on WIRE WRAP post	--.--.----
U	Detent-spring solder contact, crimp	54.03.0201
UU	detent-spring solder contact, crimp	54.34.6002
V	Contact, female, for heavy stranded wire	54.02.0432
VV	contact, female, for thin stranded wire	54.02.0474
W	Wrapped	--.--.----
	Flat connector AMP FASTON, crimp, 0.5 * 2.8 mm:	
X	contact, female, for thin stranded wire	54.02.0325
XX	contact, female, for heavy stranded wire	54.02.0329
	Flat connector AMP FASTON, crimp, 0.8 * 2.8 mm:	
Y	contact, female, for thin stranded wire	54.02.0326
YY	contact, female, for heavy stranded wire	54.02.0327
Z	Not tinned	--.--.----

5.1.4
Wire labeling, color scheme

The most important leads of the wiring are labeled. Two numbers can be found on the end of each wire: these specify the element of the group and the corresponding connecting point.

Example:

Tape move sensor GR 28, EL 05. Conductor color: orange. This wire carries the identification 5 - 4. This means that the orange wire is connected to point 04 of element 05.

Color scheme

0	black	(blk)
1	brown	(brn)
2	red	(red)
3	orange	(org)
4	yellow	(yel)
5	green	(grn)
6	blue	(blu)
7	violet	(vio)
8	grey	(gry)
9	white	(wht)
-	uncolored	(unc)

5.1.5
Explanations to LOCATION PIN LIST

This list is arranged by group. If the group number or group designation is known, further information can be found by consulting this list.
If only the signal name is known, consult the SIGNAL WIRE LIST (refer to 5.1.6 or 5.5).

The LOCATION PIN LIST is arranged by group number from GR 01 to GR 91.

Example: (refer to Section 5/17, LOCATION PIN LIST p. 17)

```
GR: 28   1.810.728.00                          <---  GROUP
TAPE TENSION UNIT RIGHT
****************************************
...
...
...

EL: 05  MOVE SENSOR            WIRE FIELD  <---  ELEMENT
----------------------------------------
TYPE PT  LV SIG.NAME COLOR F   X     Y
---- --- -- -------- ----- - ----- -----
U    01  0  + 0.0    0
U    02  0  + 5.6    2
U    03  0  T-CLK1   1
U    04  0  T-CLK2   3

:    :          :     :
:    :          :     :
:    :          :     COLOUR
:    :          :
:    :          SIGNAL NAME
:    :
:    CONNECTION POINT
:
CONNECTION TYPE
```

Group:
GR 28, 1.810.728.00
TAPE TENSION UNIT RIGHT

Element:
EL 05 MOVE SENSOR

Wiring:
In the wiring matrix (stranded wire is soldered directly to the board).

Type of connection:
U (detent spring solder contact).

Connecting point:
04

Signal name
T-CLK2

Color
3 (orange)

5.1.6
Explanations to SIGNAL WIRE LIST

This list is arranged by signal name. If the signal name is known, further information can be obtained by consulting this list. If only the group designation or the group number are known, consult the LOCATION PIN LIST (refer to 5.1.5 or 5.4).

The SIGNAL WIRE LIST is arranged in alphabetic order by signal name (the signal names of the neutrals and the supply voltages are at the top of this list).

The signal names are listed in the first column which also specifies the color. The second and third columns specify the connecting point of the corresponding group and element on which the signal is available.

Example (refer to Section 5/29, SIGNAL WIRE LIST, p. 40)

```
SIG.NAME COLOR TYPE GR EL PT S DESCRIPTION OF ELEMENT
-------- ----- ---- -- -- -- - ------------------------------
...
...
...
T-CLK2                20 02 02   CONN. TAPE DECK CONTROLLER   J02
                      20 20 16   CONN. SPOOLING MOTOR CONTR.  P01
                      24 01 16   FROM GR 20, EL 20
                      24 03 14   CONN. TAPE TENS. UNIT, RIGHT J03
                      28 01 14   FROM GR 24, EL 03            J01
          3     N     28 04 04   CONN. MOVE SENSOR            J03
          3     U     28 05 04   MOVE SENSOR           WIRE FIELD

...
...
...
```

Signal name:
T-CLK2

Color:
3 (orange)

Connection type:
U (detent spring solder contact), soldered directly into wiring matrix of MOVE SENSOR

Signal path:
The signal is conducted from
MOVE SENSOR, wiring matrix, (GR 28, EL 05, PT 04)
with a CIS connector (connection type N) to
GR 28, EL 04, PT 04 (TAPE TENSION BOARD RIGHT), on this board to
GR 28, EL 01, PT 14 (solder terminal for flat cable)
through the flat cable to
GR 24, EL 03, PT 14 (SPOOLING MOTOR CONTROL, flat-cable connector)
etc.

5.2
SIGNAL NAMES

(T = TTL, C = CMOS)

+ 0.0	0	
0.0 VCU	0	
+ 5.6	0	
+ 5V-LED	0	
+110.0	0	
+15.0	0	
+24.0	0	
-15.0	0	

ACA	0	AC supply voltage, pole A	
ACAF	0	AC supply voltage after fuse	
ACB	0	AC supply voltage, pole B	
ACC	0	AC supply voltage, pole C (C=medium)	
ACM	0	Motor AC voltage	
AFCSW-XY	0	Audio frequency current switch,	1 @ record current on
AN-POT	0	DC Varispeed control	
AN-RFTTL	0	Reference tape tension, left (analog)	
AN-RFTTR	0	Reference tape tension, right (analog)	
AN-TACHO	0	Tacho sensor capstan motor	
AN-TTL	0	Tape tension, left (analog)	
AN-TTR	0	Tape tension, right (analog)	
B-BDY-XY	0	Control of Dolby NRS,	0 @ processor on input
B-CCIR	0	LED on master panel	
B-CH1	0	LED on key board for audio alignment,	0 @ on
B-CH2	0	LED on key board for audio alignment,	0 @ on
B-FAD	0	LED on command unit	
B-FAST	0	LED on master panel	
B-FORW	0	LED on command unit	
B-INP-XY	0	LED on channel control	
B-LED0	0	LED on key board for audio alignment,	0 @ on
B-LED1	0	LED on key board for audio alignment,	0 @ on
B-LED2	0	LED on key board for audio alignment,	0 @ on
B-LED3	0	LED on key board for audio alignment,	0 @ on
B-LOC1	0	LED on command unit	
B-MONO	0	LED on master panel,	0 @ on
B-NAB	0	LED on master panel,	0 @ on
B-PLAY	0	LED on command unit,	0 @ on
B-REA-XY	0	LED on channel control,	0 @ on
B-REC	0	LED on command unit,	0 @ on
B-REC-XY	0	LED on channel control,	0 @ on
B-REP-XY	0	LED on channel control,	0 @ on
B-REW	0	LED on command unit,	0 @ on
B-SAF-XY	0	LED on channel control,	0 @ on
B-SLOW	0	LED on master panel,	0 @ on
B-STEREO	0	LED on master panel,	0 @ on
B-STORE	0	LED on key board for audio alignment,	0 @ on
B-STOP	0	LED on command unit,	0 @ on
B-SYN-XY	0	LED on channel control,	0 @ on
B-TLC-XY	0	Control of Telcom NRS,	1 @ processor on input
B-TRANSF	0	LED on command unit	
B-XKEY	0	LED on command unit	

```
B-YKEY   0 LED on command unit
B-ZKEY   0 LED on command unit
BIASA-XY 0 Bias driver, HF-switch
BIASB-XY 0 Supply voltage for bias driver
BIASC-XY 0 Bias driver, HF-switch
BR-FAD   0 Parallel remote control LED
BR-FORW  0 Parallel remote control LED
BR-PLAY  0 Parallel remote control LED
BR-REC   0 Parallel remote control LED
BR-REW   0 Parallel remote control LED
BR-STOP  0 Parallel remote control LED
BRC-BIA  0 LED on key board for audio alignment (rec. bias)      0 @ on
BRC-LVL  0 LED on key board for audio alignment (rec. level)     0 @ on
BRC-TRB  0 LED on key board for audio alignment (rec. treble)    0 @ on
BRP-BAS  0 LED on key board for audio alignment (repr. bass)     0 @ on
BRP-LVL  0 LED on key board for audio alignment (repr. level)    0 @ on
BRP-TRB  0 LED on key board for audio alignment (repr. treble)   0 @ on

CA-ADR-R 0 CMOS bus LSB address
CA-ADR-S 0          "
CA-ADR-T 0          "
CA-ADR-U 0 CMOS bus MSB address
CA-BADXY 0 Bias adjustement enable,                          0 @ write
CA-BATXY 0
CA-BIAXY 0 Bias soft switching,                  1 @ bias soft switch on
CA-BIKXY 0 Bias switching,                          1 @ bias switches on
CA-BPDTC 0 Bypass delay time code,                             1 @ by pass
CA-CHSTC 0 Time-code
CA-CHSXY 0 Channel select, CMOS bus              0 @ select on for write
CA-DATA0 0 Data line, CMOS bus
CA-DATA1 0 Data line, CMOS bus
CA-DATA2 0 Data line, CMOS bus
CA-DATA3 0 Data line, CMOS bus
CA-DATA4 0 Data line, CMOS bus
CA-DATA5 0 Data line, CMOS bus
CA-DATA6 0 Data line, CMOS bus
CA-DATA7 0 Data line, CMOS bus
CA-EQLXY 0 Switching eqalization, low frequency,
CA-EQLXY 1 0 @ 3180 us on, =NAB, 1=CCIR
CA-EQRXY 0 Equalization record adjustment enable,           0 @ write
CA-EQTXY 0
CA-ERAXY 0 Erase soft switching,                 1 @ erase soft switch on
CA-ERKXY 0 Erase switching,                          1 @ erase switch on
CA-ER1XY 0 Erase voltage
CA-ER2XY 0 Erase voltage
CA-ER3XY 0 Erase voltage
CA-ER4XY 0 Erase voltage
CA-INPXY 0 Input signal on output,                       0 @ input on
CA-LERXY 0 Level record adjustment enable,                  0 @ write
CA-LETXY 0 Level tape adjustment enable                     0 @ write
CA-LLADB 0 Operating line level 10 dBm,                        1 @ on
CA-LL0DB 0 Operating line level  0 dBm,                        1 @ on
CA-LL4DB 0 Operating line level  4 dBm,                        1 @ on
CA-LL8DB 0 Operating line level  8 dBm,                        1 @ on
CA-LSBTC 0 Data load LSB time code,                         1 @ load
CA-LSWXY 0 Line amplifier switching,                        1 @ write
CA-MONO  0 Mono-stereo switch,                          0 @ mono mode
CA-MSBTC 0 Data load MSB time code,                         1 @ load
CA-MUTXY 0 Muting of line output,                           1 @ mute
CA-RSWXY 0 Record switching enable,                         1 @ write
CA-RS1TC 0 Read source time code
CA-RS2TC 0 Read source time code
CA-SAFE  0 Audio safe, reproduce mode,                      1 @ safe
CA-SYNXY 0 Sync signal on output,                        0 @ Sync on
CA-TRRXY 0 Treble record adjustment enable,                 0 @ write
CA-TRTXY 0 Treble tape adjustment enable,                   0 @ write
CA-WL0TC 0 Write level time code
CA-WL1TC 0 Write level time code
CA-WL2TC 0 Write level time code
CA-WL3TC 0 Write level time code
CA-WRTTC 0 Write time code,                                 1 @ write
CTS      0
```

```
EQUAL-XY 0
ERACS-XY 0 Erase current off,                          0 @ current off
ERAHH-TC 0 Erase head, high, time-code
ERAHH-XY 0 Erase head, high
ERAHL-TC 0 Erase head, low, time-code
ERAHL-XY 0 Erase head, low
ERAHM-XY 0 Erase head, medium
ERAHO-XY 0 Erase head, screen

FAD1     0 Fader start,                            5 V to 30 V @ PLAY
FAD2     0 Fader start,                            5 V to 30 V @ PLAY

GND      0 Ground

INPAD-XY 0 Input, adjusted
INPAU-XY 0 Input, uncalibrated
INPDI-XY 0 Input, direct

K-BRAKE  0 Brake solenoid
K-EDIT   0 Edit solenoids
K-LIFT   0 Lift solenoid
K-PRESS  0 Press solenoid
K-REC-XY 0 Record relay / sync muting,      0 @ record on / sync muting

LINE1    0 Power line
LINE2    0 Power line
LINFA-TC 0 Time code line input, amplifier (wire A)
LINFA-XY 0 Line input, amplifier (wire A)
LINFB-TC 0 Time code line input, amplifier (wire B)
LINFB-XY 0 Line input, amplifier (wire B)
LINSA-TC 0 Time code line input, machine (wire A)
LINSA-XY 0 Line input, machine (wire A)
LINSB-TC 0 Time code line input, machine (wire B)
LINSB-XY 0 Line input, machine (wire B)
LOUFA-TC 0 Time code line output, amplifier (wire A)
LOUFA-XY 0 Line output, amplifier (wire A)
LOUFB-TC 0 Time code line output, amplifier (wire B)
LOUFB-XY 0 Line output, amplifier (wire B)
LOUSA-TC 0 Time code line output, machine (wire A)
LOUSA-XY 0 Line output, machine (wire A)
LOUSB-TC 0 Time code line output, machine (wire B)
LOUSB-XY 0 Line output, machine (wire B)

MONIT-XY 0 Monitor signal
MONITAMP 0 Monitor signal, from volume control

PRIMW-1  0 Mains transformer, primary
PRIMW-2  0 Mains transformer, primary
PRIMW-3  0 Mains transformer, primary
PRIMW-4  0 Mains transformer, primary
PRIMW-5  0 Mains transformer, primary
PRIMW-6  0 Mains transformer, primary
PRIMW-7  0 Mains transformer, primary

RCCOMM   0
RCVDATA  0
RECHH-TC 0 Record head, high, time-code
RECHH-XY 0 Record head, high
RECHL-TC 0 Record head, low, time-code
RECHL-XY 0 Record head, low
RECIN-XY 0 Record amplifier, input
REPHH-TC 0 Reproduce head, high, time-code
REPHH-XY 0 Reproduce head, high
REPHL-TC 0 Reproduce head, low, time-code
REPHL-XY 0 Reproduce head, low
REPRE-XY 0
REPRO-XY 0
S-AKBENA 0 Audio parameter keyboard enabled @ 1
S-CADEQU 0 Common adjust for equalization (CCIR levels = NAB levels)
S-EHEAD1 0 Type of erase head {AB=10 @ full track, AB=11 @ time code
S-EHEAD2 0                   {AB=01 @ two track,  AB=00 @ record def.
S-EQUAL  0
S-FORW   0 0 @ FORWARD command
S-INP-XY 0 0 @ INPUT command
S-LINE1  0 Power line from mains switch
S-LINE2  0 Power line from mains switch
```

```
S-LINELA 0 Line operating level setting { AB=00 @ 0 dBm, AB=10 @ 4 dBm
S-LINELB 0                              { AB=01 @ 8 dBm, AB=11 @10 dBm
S-LLLSDB 0 Line level LSB
S-LLMSDB 0 Line level MSB
S-LOC1   0 Key on command unit                          0 @ LOC1 command
S-NABCCI 0 Audio parameter equal. for CCIR and NAB
S-PLAY   0 Key on command unit                          0 @ PLAY command
S-PLCNTR 0 Parallel control of audio channels,              0 @ parallel
S-REA-XY 0 Key on channel control                     0 @ READY command
S-REC    0 Key on command unit                       0 @ RECORD command
S-RECAPT 0
S-REP-XY 0 Key on channel control                 0 @ REPRODUCE command
S-RESET  0 Key on command unit                      0 @ RESET command
S-REW    0 Key on command unit                     0 @ REWIND command
S-SAF-XY 0 Key on channel control                     0 @ SAFE command
S-SPEEDA 0 0 @ SLOW speed                               0 @ on command
S-SPEEDB 0 0 @ FAST speed                               0 @ on command
S-STOP   0 Key on command unit                        0 @ STOP command
S-SYN-XY 0 Key on channel control                     0 @ SYNC command
S-TRANSF 0 Key on command unit       0 @ TRANSFER command to LOC memory
S-OLOC   0 Key on command unit                        0 @ OLOC command
S-XKEY   0 Key on command unit                          0 @ on command
S-YKEY   0 Key on command unit                          0 @ on command
S-ZKEY   0 Key on command unit                          0 @ on command
SF-LINE1 0 Power line from mains filter
SF-LINE2 0 Power line from mains filter
SHIELD   0
SNCOMM   0
SNDATA   0
SR-FORW  0 0 @ FORWARD command from remote control
SR-LIFT  0 0 @ LIFTER command from remote control
SR-LOC1  0 0 @ LOC1 command from remote control
SR-PLAY  0 0 @ PLAY command from remote control
SR-REC   0 0 @ RECORD command from remote control
SR-REW   0 0 @ REWIND command from remote control
SR-STOP  0 0 @ STOP command from remote control
SR-TRANS 0 0 @ TRANSFER command from remote control
SR-VRSPD 0 0 @ VARISPEED command from remote control
STABIN-1 0 Stabilizer input
STABIN-3 0 Stabilizer input
STABIN-4 0 Stabilizer input
STABIN-5 0 Stabilizer input
STABIN-6 0 Stabilizer input
STUBUS1  0 STUDER bus line symmetrical
STUBUS2  0 STUDER bus line symmetrical
SYNHH-XY 0 Record head, high, sync mode
SYNHL-XY 0 Record head, low, sync mode
SYPRE-XY 0

T-ACSTR  0 Audio controller strobe
T-ADOPT1 0 Audio VU-panel int/ext                 1 @ VU-panel external
T-ADRX   0 Address bus, microprocessor bus TTL
T-ADRY   0 Address bus, microprocessor bus TTL
T-ADRZ   0 Address bus, microprocessor bus TTL
T-BUSSW  0
T-CAPON  0 Capstan control on/off                                0 @ on
T-CLK1   0 Clock 1 from tape move sensor
T-CLK2   0 Clock 2 from tape move sensor
T-CTS    0
T-CUSTR  0 Command unit strobe
T-DATA0  0 Data bus
T-DATA1  0 Data bus
T-DATA2  0 Data bus
T-DATA3  0 Data bus
T-DATA4  0 Data bus
T-DATA5  0 Data bus
T-DATA6  0 Data bus
T-DATA7  0 Data bus
T-DIR    0 Tape move direction                              1 @ forward
T-DRVENB 0 Drivers ser. IF enable/disable            0 @ drivers enabled
T-DT-CH1 0 Data for channel 1, MUX bus
T-DT-CH2 0 Data for channel 2, MUX bus
T-DT-CH3 0 Data for channel 3, MUX bus
T-DT-MP  0 Data for master panel, MUX bus
T-DT-RES 0 Available data line
T-DT-RP1 0 Data for parallel remote panel, MUX bus
T-DT-RP2 0 Data for parallel remote panel, MUX bus
```

```
T-DT-SJM 0 Data for jumpers ser. IF mode control, MUX bus
T-ENB    0 Processor's clock (1.2288 MHz)
T-IRQ    0 Processor's interrupt line
T-LEDL   0 0 @ tape end
T-LEDR   0 0 @ tape end
T-MODSEL 0
T-MONMUT 0 Monitor muting for fader mode,            0 @ monitor muting
T-MRS-XY 0 Control of Dolby NRS,                 0 @ processor on input
T-NMI    0
T-NOMSPD 0
T-PWRON  0 Power on                                            1 @ on
T-READSL 0 Select read mode, MUX bus
T-REFEXT 0 Capstan PLL, external reference (vari-speed)
T-REFINT 0 Internal reference for capstan (9.6 kHz)
T-REFSEL 0 Speed reference select                        0 @ varispeed
T-RESET  0 System reset line
T-RTS    0
T-RVSTR  0
T-RW     0 Processor's read/write                            1 @ read
T-RX     0 Serial IF read line
T-SADA   0 Address A, MUX bus
T-SADB   0 Address B, MUX bus
T-SADC   0 Address C, MUX bus
T-SL1    0
T-SPDSL  0 Capstan speed select              IPS | 30 | 15 | 7.5|3.75|
T-SPDSL1 1 Capstan speed select                  |  0 |  0 |  1 |  1 |
T-SPDSL2 0 Capstan speed select                  |  0 |  1 |  1 |  0 |
T-SUPVON 0 Supply voltages on                                  1 @ on
T-SYNCAP 0 Capstan synchronisation                            0 @ sync
T-TCINDL 0 Time code input delay
T-TCOUDL 0 Time code output delay
T-TCPRES 0 Time code present
T-TDSTR  0 Tape deck controller strobe                   0 @ selected
T-TENDL  0 Tape end sensor, left                         0 @ tape end
T-TENDR  0 Tape end sensor, right                        0 @ tape end
T-TNDL   0
T-TNDR   0
T-TPSPD1 0 Tape spooling speed
T-TPSPD2 0 Tape spooling speed
T-TX     0 Serial IF, send line
T-VARSPD 0 0 @ external reference for capstan motor control
T-WRTSL  0 Write select, MUX bus
TA-ACTMO 0 Mono-stereo switch stand by,              0 @ switch missing
TA-ACTTC 0 Time code channel record section stand by
TA-ACTTC 1                                       0 @ defect or missing
TA-ACTXY 0 Channel record section stand by,      0 @ defect or missing
TA-CLK   0 Audio clock (307.2 KHz)
TAPAD-XY 0 Tape signal, adjusted
TAPAU-XY 0 Tape signal, uncalibrated
TAPDI-XY 0 Tape direct
TAPLI-XY 0 Check point
TAPMS-XY 0 Tape signal, after mono-stereo switch
TD-CLK   0 Clock for spooling motor control (76.8 KHz)
TO-CLK   0 Tape move clock parallel remote
TO-DIR   0 Tape move direction parallel remote
TS-ADCH1 0 Audio adjust, channel 1
TS-ADCH2 0 Audio adjust, channel 2
TS-CH1   0 Key on board for audio alignment,             0 @ on command
TS-CH2   0 Key on board for audio alignment,             0 @ on command
TS-DOWN  0 Key on board for audio alignment,             0 @ on command
TS-STORE 0 Key on board for audio alignment,             0 @ on command
TS-UP    0 Key on board for audio alignment,             0 @ on command
TSRC-BIA 0 Key on board for audio alignment,             0 @ on command
TSRC-LVL 0 Key on board for audio alignment,             0 @ on command
TSRC-TRB 0 Key on board for audio alignment,             0 @ on command
TSRP-BAS 0 Key on board for audio alignment,             0 @ on command
TSRP-LVL 0 Key on board for audio alignment,             0 @ on command
TSRP-TRB 0 Key on board for audio alignment,             0 @ on command

VU-A-XY  0 VU Meter signal, wire A
VU-B-XY  0 VU Meter signal, wire B

O-TACHO  0 Tacho sensor capstan motor
```

```
PAGE   1   OF   46

TITLE:   TAPE TRANSPORT & AUDIO CIRCUITS * STUDER A810 *          1.810.090.00      INDEX: 0      DATE OF ORIGIN: 81/01/29
                                                                                                DATE OF PROC.:  83/02/25

OPTIONS IN EFFECT:  LOCLIS, SIGLIS, ALLCOL

                                                                                                TOTAL GROUPS:          38
                                                                                                TOTAL ELEMENTS:       153
                                                                                                TOTAL PINS:          1980
                                                                                                TOTAL UNUSED PINS:    213
                                                                                                MULTIPLE PINS:          0

SIGNALS: TOTAL:     317                                                                         GROUP NODE            = *
         USED:      258                                                                         INTER GROUP NODE      = #
         UNUSED:     59                                                                         DIRECT WIRE TO #      = <
                                                                                                WIRING NOT COMPUTED   = @
DIAGNOSTICS GENERATED:   N O N E
```

```
*  S T U D E R  *     L O C A T I O N   P I N   L I S T     *   83/02/25 * 08:28     *  P A G E     2   *
TAPE TRANSPORT & AUDIO CIRCUITS * STUDER A810 *          1.810.090.00          81/01/29

GR: 01     54.04.0109
POWER INPUT

EL: 01  CONNECTOR POWER INPUT          P01

TYPE PT  LV SIG.NAME COLOR F   X     Y
---- --- -- -------- ----- - ----- -----
     01  0  LINE1    1
     02  0  LINE2    6
     03  0  GND      5/4

GR: 02     55.12.0001
POWER SWITCH

EL: 01  POWER SWITCH

TYPE PT  LV SIG.NAME COLOR F   X     Y
---- --- -- -------- ----- - ----- -----
J    01  0  LINE1    1
J    02  0  LINE2    6
J    03  0  S-LINE1  1
J    04  0  S-LINE2  6

GR: 03     89.01.0384
MAINS FILTER

EL: 01  MAINS FILTER, INPUT

TYPE PT  LV SIG.NAME COLOR F   X     Y
---- --- -- -------- ----- - ----- -----
J    01  0  S-LINE1  1
J    02  0  S-LINE2  6

EL: 02  MAINS FILTER, OUTPUT

TYPE PT  LV SIG.NAME COLOR F   X     Y
---- --- -- -------- ----- - ----- -----
J    01  0  SF-LINE1 1
J    02  0  SF-LINE2 6
```

```
*  S T U D E R  *     L O C A T I O N   P I N   L I S T     *   83/02/25 * 08:28     *  P A G E     3   *
TAPE TRANSPORT & AUDIO CIRCUITS * STUDER A810 *          1.810.090.00          81/01/29

GR: 04     53.03.0130
MAIN FUSE/VOLTAGE SELECTOR

EL: 01  FUSE HOLDER

TYPE PT  LV SIG.NAME COLOR F   X     Y
---- --- -- -------- ----- - ----- -----
L    01  0  SF-LINE1 1

EL: 02  VOLTAGE SELECTOR

TYPE PT  LV SIG.NAME COLOR F   X     Y
---- --- -- -------- ----- - ----- -----
L    01  0  SF-LINE2 6+8
L    02  0  PRIMW-3  3
L    03  0  PRIMW-7  7
L    04A 0  PRIMW-4  4+4
L    04B 0  PRIMW-6  6+4
L    05  0  PRIMW-1  1
L    06  0  PRIMW-5  5
L    07  0  PRIMW-2  2

GR: 05   1.810.200.00
MAINS TRANSFORMER

EL: 01  PRIMARY 1                      P01

TYPE PT  LV SIG.NAME COLOR F   X     Y
---- --- -- -------- ----- - ----- -----
Y    01  0  PRIMW-1  1
Y    02  0  PRIMW-2  2
Y    03  0  PRIMW-3  3
Y    04  0  PRIMW-4  4

EL: 02  PRIMARY 2                      P02

TYPE PT  LV SIG.NAME COLOR F   X     Y
---- --- -- -------- ----- - ----- -----
Y    05  0  PRIMW-5  5
Y    06  0  PRIMW-6  6
Y    07  0  PRIMW-7  7
Y    08  0  SF-LINE2 8

EL: 03  SECONDARY 1                    P03

TYPE PT  LV SIG.NAME COLOR F   X     Y
---- --- -- -------- ----- - ----- -----
     09  0
     10  0
L    11  0  ACC-35.2 4
Y    12  0  ACA-35.2 7
L    13  0  ACC-25.6 4
Y    14  0  ACA-25.6 5
Y    15  0  ACA-125  2
L    16  0  ACA-10
Y    17  0  ACA-10
L    18  0  ACC-10   4
Y    19  0  ACA-130  6
L    20  0  ACC-130  4

EL: 04  SECONDARY 2                    P04

TYPE PT  LV SIG.NAME COLOR F   X     Y
---- --- -- -------- ----- - ----- -----
L    09  0  ACC-130  4
Y    10  0  ACB-130  6
L    11  0  ACC-10   4
Y    12  0  ACB-10
L    13  0  ACB-10
Y    14  0  ACB-125  0
Y    15  0  ACB-25.6 4
L    16  0  ACC-25.6 4
Y    17  0  ACB-35.2 2
L    18  0  ACC-35.2 4
     19  0
     20  0

GR: 06
RECTIFIER UNIT

EL: 01  FUSE, F 1

TYPE PT  LV SIG.NAME COLOR F   X     Y
---- --- -- -------- ----- - ----- -----
L    01  0  ACA-25.6 5
L    02  0  STABIN-1 5

EL: 02  FUSE, F 2

TYPE PT  LV SIG.NAME COLOR F   X     Y
---- --- -- -------- ----- - ----- -----
L    01  0  ACA-35.2 7
L    02  0  ACAF35.2 7

EL: 03  SOLDER TERMINAL

TYPE PT  LV SIG.NAME COLOR F   X     Y
---- --- -- -------- ----- - ----- -----
L    01  0  STABIN-1 5
L    02  0
L    03  0  ACB-25.6 4

EL: 04  RECTIFIER, D 1

TYPE PT  LV SIG.NAME COLOR F   X     Y
---- --- -- -------- ----- - ----- -----
J    01  0  STABIN-1 5
J    02  0  ACB-25.6 4
J    03  0  STABIN-5 2
J    04  0  STABIN-6 6

EL: 05  RECTIFIER, D 2

TYPE PT  LV SIG.NAME COLOR F   X     Y
---- --- -- -------- ----- - ----- -----
J    01  0  ACAF35.2 7
J    02  0  ACB-35.2 2
J    03  0  STABIN-4 3
J    04  0  STABIN-3 1

EL: 06  CAPACITOR, C 2

TYPE PT  LV SIG.NAME COLOR F   X     Y
---- --- -- -------- ----- - ----- -----
L    01  0  STABIN-5 2
L    02  0  STABIN-6 6

EL: 07  CAPACITOR, C 3

TYPE PT  LV SIG.NAME COLOR F   X     Y
---- --- -- -------- ----- - ----- -----
L    01  0  STABIN-5 2
L    02  0  STABIN-6 6
```

```
*****************************************************************************************************************
*  S T U D E R  *      L O C A T I O N    P I N    L I S T      *   83/02/25 * 08:28      *   P A G E     4   *
*****************************************************************************************************************
TAPE TRANSPORT & AUDIO CIRCUITS * STUDER A810 *              1.810.090.00            81/01/29
```

GR: 06 (CONTINUATION)
RECTIFIER UNIT

EL: 08 CAPACITOR, C 1

TYPE	PT	LV	SIG.NAME	COLOR	F	X	Y
L	01	0	STABIN-4	3			
L	02	0	STABIN-3	1			

GR: 07 1.810.770.00
STABILIZER

EL: 01 OUTPUT (TO GR 20, EL 31/32) P01

TYPE	PT	LV	SIG.NAME	COLOR	F	X	Y
F	01	0	+ 0.0	0			
F	02	0	+24.0	7			
F	03	0	+ 5.6	3			
F	04	0	+15.0	2			
F	05	0	+ 0.0	4			
F	06	0	+ 5.6	3			
F	07	0	+ 0.0	0			
F	08	0	+ 0.0	4			
F	09	0	+ 0.0	4			
F	10	0	-15.0	6			
F	11	0	T-PWRON	1			
F	12	0	T-SUPVON	5			

EL: 02 INPUT

TYPE	PT	LV	SIG.NAME	COLOR	F	X	Y
Y	01	0	STABIN-1	5			
Y	02	0	ACB-25.6	4			
Y	03	0	STABIN-3	1			
Y	04	0	STABIN-4	3			
Y	05	0	STABIN-5	2			
Y	06	0	STABIN-6	6			

GR: 08
REAR PANEL

EL: 01 EARTH CONTACT

TYPE	PT	LV	SIG.NAME	COLOR	F	X	Y
	01	0	GND				

EL: 02 GROUND

TYPE	PT	LV	SIG.NAME	COLOR	F	X	Y
	01	0	GND	5/4			

```
*****************************************************************************************************************
*  S T U D E R  *      L O C A T I O N    P I N    L I S T      *   83/02/25 * 08:28      *   P A G E     5   *
*****************************************************************************************************************
TAPE TRANSPORT & AUDIO CIRCUITS * STUDER A810 *              1.810.090.00            81/01/29
```

GR: 09 1.810.726.00
CONNECTOR BOARD SPOOLING MOTOR, LEFT

EL: 01

TYPE	PT	LV	SIG.NAME	COLOR	F	X	Y
Y	01	0	ACML-H	1			
Y	02	0	ACML-H	5			
Y	03	0	ACML-0	4			
Y	04	0	ACML-C	6			
U	05	0	ACML-H	6			
U	06	0	ACML-0	0			
U	07	0	ACML-0	1			
U	08	0	ACML-C	3			

EL: 02 PHASE SHIFT CAPACITOR

TYPE	PT	LV	SIG.NAME	COLOR	F	X	Y
J	01	0	ACML-0	1			
J	02	0	ACML-C	3			

GR: 10 1.810.727.00
CONNECTOR BOARD SPOOLING MOTOR, RIGHT

EL: 01

TYPE	PT	LV	SIG.NAME	COLOR	F	X	Y
Y	01	0	ACMR-H	1			
Y	02	0	ACMR-H	6			
Y	03	0	ACMR-0	4			
Y	04	0	ACMR-C	5			
U	05	0	ACMR-H	4			
U	06	0	ACMR-0	0			
U	07	0	ACMR-0	1			
U	08	0	ACMR-C	3			

EL: 02 PHASE SHIFT CAPACITOR

TYPE	PT	LV	SIG.NAME	COLOR	F	X	Y
J	01	0	ACMR-0	1			
J	02	0	ACMR-C	3			

GR: 20 1.810.700.00
BASIS BOARD

EL: 01 CONNECTOR MPU UNIT J01

TYPE	PT	LV	SIG.NAME	COLOR	F	X	Y
	01	0					
	02	0					
	03	0					
	04	0					
	05	0					
	06	0					
	07	0					
	08	0	T-BUSSW				
	09	0	T-NMI				
	10	0	T-RX				
	11	0	T-TX				
	12	0	T-DRVENB				
	13	0	T-IRQ				
	14	0	T-PWRON				
	15	0	T-RVSTR				
	16	0	TD-CLK				
	17	0	T-REFINT				
	18	0	+15.0				
	19	0	KEY				
	20	0	+ 5.6				
	21	0	+ 0.0				
	22	0	TA-CLK				
	23	0	T-CUSTR				
	24	0	T-TDSTR				
	25	0	T-ACSTR				
	26	0	T-RESET				
	27	0	T-RW				
	28	0	T-ENB				
	29	0	T-ADRZ				
	30	0	T-ADRY				
	31	0	T-ADRX				
	32	0	T-DATA7				
	33	0	T-DATA6				
	34	0	T-DATA5				
	35	0	T-DATA4				
	36	0	T-DATA3				
	37	0	T-DATA2				
	38	0	T-DATA1				
	39	0	T-DATA0				

EL: 02 CONN. TAPE DECK CONTROLLER J02

TYPE	PT	LV	SIG.NAME	COLOR	F	X	Y
	01	0	T-CLK1				
	02	0	T-CLK2				
	03	0	T-TENDL				
	04	0	T-TENDR				
	05	0	T-DIR				
	06	0	T-SUPVON				
	07	0	T-SYNCAP				

./.

GR: 20 (CONTINUATION)
BASIS BOARD

EL: 02 (CONTINUATION)

TYPE	PT	LV	SIG.NAME	COLOR	F	X	Y
	08	0	T-TPSPD1				
	09	0	T-TPSPD2				
	10	0	T-SPDSL1				
	11	0	T-SPDSL2				
	12	0	T-REFSEL				
	13	0	AN-RFTTL				
	14	0	AN-RFTTR				
	15	0	K-BRAKE				
	16	0	K-LIFT				
	17	0	K-PRESS				
	18	0	+15.0				
	19	0	KEY				
	20	0	+ 5.6				
	21	0	+ 0.0				
	22	0	K-EDIT				
	23	0	T-CAPON				
	24	0	+ 0.0				
	25	0	T-TDSTR				
	26	0	T-RESET				
	27	0	T-RW				
	28	0	T-ENB				
	29	0	T-ADRZ				
	30	0	T-ADRY				
	31	0	T-ADRX				
	32	0	T-DATA7				
	33	0	T-DATA6				
	34	0	T-DATA5				
	35	0	T-DATA4				
	36	0	T-DATA3				
	37	0	T-DATA2				
	38	0	T-DATA1				
	39	0	T-DATA0				

EL: 03 CONN. SERIAL REM. CONTROLLER J03

TYPE	PT	LV	SIG.NAME	COLOR	F	X	Y
	01	0	SHIELD				
	02	0	STUBUS2				
	03	0	SNDATA				
	04	0	SNCOMM				
	05	0	RCCOMM				
	06	0	RCVDATA				
	07	0	STUBUS1				
	08	0	GND				
	09	0	SPARE				
	10	0	T-RX				
	11	0	T-TX				
	12	0	T-DRVENB				
	13	0	T-RTS				
	14	0	T-CTS				

./.

GR: 20 (CONTINUATION)
BASIS BOARD

EL: 03 (CONTINUATION)

TYPE	PT	LV	SIG.NAME	COLOR	F	X	Y
	15	0	T-BUSSW				
	16	0	T-RVSTR				
	17	0					
	18	0	+15.0				
	19	0	KEY				
	20	0	+ 5.6				
	21	0	+ 0.0				
	22	0	-15.0				
	23	0	T-CUSTR				
	24	0	T-TDSTR				
	25	0	T-ACSTR				
	26	0	T-RESET				
	27	0	T-RW				
	28	0	T-ENB				
	29	0	T-ADRZ				
	30	0	T-ADRY				
	31	0	T-ADRX				
	32	0	T-DATA7				
	33	0	T-DATA6				
	34	0	T-DATA5				
	35	0	T-DATA4				
	36	0	T-DATA3				
	37	0	T-DATA2				
	38	0	T-DATA1				
	39	0	T-DATA0				

EL: 04 CONN. PERIPHERY CONTROLLER J04

TYPE	PT	LV	SIG.NAME	COLOR	F	X	Y
	01	0	T-SADA				
	02	0	T-SADB				
	03	0	T-SADC				
	04	0	T-READSL				
	05	0	T-WRTSL				
	06	0	T-DT-CH1				
	07	0	T-DT-CH2				
	08	0	T-DT-CH3				
	09	0	T-DT-MP				
	10	0	T-DT-RP1				
	11	0	T-DT-RP2				
	12	0	T-DT-SJM				
	13	0	T-DT-RES				
	14	0					
	15	0					
	16	0					
	17	0					
	18	0	+15.0				
	19	0	KEY				
	20	0	+ 5.6				
	21	0	+ 0.0				

./.

GR: 20 (CONTINUATION)
BASIS BOARD

EL: 04 (CONTINUATION)

TYPE	PT	LV	SIG.NAME	COLOR	F	X	Y
	22	0	-15.0				
	23	0					
	24	0					
	25	0	T-ACSTR				
	26	0	T-RESET				
	27	0	T-RW				
	28	0	T-ENB				
	29	0	T-ADRZ				
	30	0	T-ADRY				
	31	0	T-ADRX				
	32	0	T-DATA7				
	33	0	T-DATA6				
	34	0	T-DATA5				
	35	0	T-DATA4				
	36	0	T-DATA3				
	37	0	T-DATA2				
	38	0	T-DATA1				
	39	0	T-DATA0				

EL: 05 CONNECTOR BUS CONVERTOR J05

TYPE	PT	LV	SIG.NAME	COLOR	F	X	Y
	01A	0					
	01B	0					
	02A	0					
	02B	0					
	03A	0					
	03B	0					
	04A	0					
	04B	0					
	05A	0					
	05B	0					
	06A	0					
	06B	0	TA-ACTMO				
	07A	0					
	07B	0	TA-ACTO1				
	08A	0					
	08B	0	TA-ACTTC				
	09A	0					
	09B	0	TA-ACTO2				
	10A	0					
	10B	0					
	11A	0					
	11B	0	CA-CHSTC				
	12A	0					
	12B	0	CA-CHSO1				
	13A	0					
	13B	0	CA-MONO				
	14A	0	T-ACSTR				
	14B	0	CA-CHSO2				

./.

GR: 20 (CONTINUATION)
BASIS BOARD

EL: 05 (CONTINUATION)

TYPE	PT	LV	SIG.NAME	COLOR	F	X	Y
	15A	0	+15.0				
	15B	0	+15.0				
	16A	0	+ 0.0				
	16B	0	+ 0.0				
	17A	0	-15.0				
	17B	0	-15.0				
	18A	0	+ 5.6				
	18B	0	+ 5.6				
	19A	0	T-RESET				
	19B	0	TA-CLK				
	20A	0	T-RW				
	20B	0	CA-SAFE				
	21A	0	T-ENB				
	21B	0	CA-ADR-R				
	22A	0	T-ADRZ				
	22B	0	CA-ADR-S				
	23A	0	T-ADRY				
	23B	0	CA-ADR-T				
	24A	0	T-ADRX				
	24B	0	CA-ADR-U				
	25A	0	T-DATA7				
	25B	0	CA-DATA0				
	26A	0	T-DATA6				
	26B	0	CA-DATA1				
	27A	0	T-DATA5				
	27B	0	CA-DATA2				
	28A	0	T-DATA4				
	28B	0	CA-DATA3				
	29A	0	T-DATA3				
	29B	0	CA-DATA4				
	30A	0	T-DATA2				
	30B	0	CA-DATA5				
	31A	0	T-DATA1				
	31B	0	CA-DATA6				
	32A	0	T-DATA0				
	32B	0	CA-DATA7				

EL: 06 CONN. CODE WRITE/READ UNIT J06

TYPE	PT	LV	SIG.NAME	COLOR	F	X	Y
	01	0	T-TCINDL				
	02	0	T-TCOUDL				
	03	0					
	04	0	ERAHH-TC 0				
	05	0	ERAHL-TC 6				
	06	0					
	07	0	RECHH-TC 0				
	08	0	RECHL-TC 6				
	09	0					
	10	0	REPHH-TC 0				

./.

GR: 20 (CONTINUATION)
BASIS BOARD

EL: 06 (CONTINUATION)

TYPE	PT	LV	SIG.NAME	COLOR	F	X	Y
	11	0	REPHL-TC 6				
	12	0					
	13	0					
	14	0	T-TCPRES				
	15	0	LINFA-TC 0				
	16	0	LINFB-TC 6				
	17	0	LOUFA-TC 0				
	18	0	LOUFB-TC 6				
	19	0	KEY				
	20	0	TA-ACTTC				
	21	0	+ 0.0	S			
	22	0	+15.0				
	23	0	-15.0				
	24	0	+ 5.6				
	25	0	TA-CLK				
	26	0	CA-SAFE				
	27	0	CA-ADR-R				
	28	0	CA-ADR-S				
	29	0	CA-ADR-T				
	30	0	CA-ADR-U				
	31	0	CA-DATA0				
	32	0	CA-DATA1				
	33	0	CA-DATA2				
	34	0	CA-DATA3				
	35	0	CA-DATA4				
	36	0	CA-DATA5				
	37	0	CA-DATA6				
	38	0	CA-DATA7				
	39	0	CA-CHSTC				

EL: 07 CONNECTOR CODE DELAY UNIT J07

TYPE	PT	LV	SIG.NAME	COLOR	F	X	Y
	01	0	T-TCINDL				
	02	0	T-TCOUDL				
	03	0					
	04	0					
	05	0					
	06	0					
	07	0					
	08	0					
	09	0					
	10	0					
	11	0					
	12	0					
	13	0					
	14	0	T-TCPRES				
	15	0					
	16	0					
	17	0					

./.

GR: 20 (CONTINUATION)
BASIS BOARD

EL: 07 (CONTINUATION)

TYPE	PT	LV	SIG.NAME	COLOR	F	X	Y
	18	0					
	19	0	KEY				
	20	0	TA-ACTTC				
	21	0	+ 0.0				
	22	0	+15.0				
	23	0	-15.0				
	24	0	+ 5.6				
	25	0	TA-CLK				
	26	0	CA-SAFE				
	27	0	CA-ADR-R				
	28	0	CA-ADR-S				
	29	0	CA-ADR-T				
	30	0	CA-ADR-U				
	31	0	CA-DATA0				
	32	0	CA-DATA1				
	33	0	CA-DATA2				
	34	0	CA-DATA3				
	35	0	CA-DATA4				
	36	0	CA-DATA5				
	37	0	CA-DATA6				
	38	0	CA-DATA7				
	39	0	CA-CHSTC				

EL: 08 CONNECTOR HF-DRIVER, CH 1 J08

TYPE	PT	LV	SIG.NAME	COLOR	F	X	Y
	01	0					
	02	0	K-REC-01				
	03	0	+ 0.0				
	04	0	+ 0.0				
	05	0	BIASA-01				
	06	0	BIASB-01				
	07	0	BIASC-01				
	08	0					
	09	0	ERACS-01				
	10	0	AFCSW-01				
	11	0	+ 0.0	S			
	12	0	ERAHL-01	6			
	13	0	ERAHM-01	0			
	14	0	ERAHH-01				
	15	0	ERAHO-01				
	16	0	+ 0.0				
	17	0	CA-BAD01				
	18	0	CA-RSW01				
	19	0	KEY				
	20	0	TA-ACTO1				
	21	0	+ 0.0				
	22	0	+15.0				
	23	0	-15.0				
	24	0	+ 5.6				

./.

GR: 20 (CONTINUATION)
BASIS BOARD

EL: 08 (CONTINUATION)

TYPE	PT	LV	SIG.NAME	COLOR	F	X	Y
	25	0	TA-CLK				
	26	0	CA-SAFE				
	27	0	CA-ADR-R				
	28	0	CA-ADR-S				
	29	0	CA-ADR-T				
	30	0	CA-ADR-U				
	31	0	CA-DATA0				
	32	0	CA-DATA1				
	33	0	CA-DATA2				
	34	0	CA-DATA3				
	35	0	CA-DATA4				
	36	0	CA-DATA5				
	37	0	CA-DATA6				
	38	0	CA-DATA7				
	39	0	CA-CHS01				

EL: 09 CONN. RECORD AMPLIFIER, CH 1 J09

TYPE	PT	LV	SIG.NAME	COLOR	F	X	Y
	01	0	RECIN-01				
	02	0	EQUAL-01				
	03	0					
	04	0	K-REC-01				
	05	0	+ 0.0		S		
	06	0	BIASA-01				
	07	0	BIASB-01				
	08	0	BIASC-01				
	09	0	RECHL-01	6			
	10	0	RECHH-01	0			
	11	0	+ 0.0		S		
	12	0	SYNHL-01				
	13	0	SYNHH-01				
	14	0	+ 0.0				
	15	0	AFCSW-01				
	16	0	+ 0.0				
	17	0	CA-BAD01				
	18	0	CA-RSW01				
	19	0	KEY				
	20	0	TA-ACT01				
	21	0	+ 0.0				
	22	0	+15.0				
	23	0	-15.0				
	24	0	+ 5.6				
	25	0	TA-CLK				
	26	0	CA-SAFE				
	27	0	CA-ADR-R				
	28	0	CA-ADR-S				
	29	0	CA-ADR-T				
	30	0	CA-ADR-U				
	31	0	CA-DATA0				

./.

GR: 20 (CONTINUATION)
BASIS BOARD

EL: 09 (CONTINUATION)

TYPE	PT	LV	SIG.NAME	COLOR	F	X	Y
	32	0	CA-DATA1				
	33	0	CA-DATA2				
	34	0	CA-DATA3				
	35	0	CA-DATA4				
	36	0	CA-DATA5				
	37	0	CA-DATA6				
	38	0	CA-DATA7				
	39	0	CA-CHS01				

EL: 10 CONN. REPRODUCE AMPL., CH 1 J10

TYPE	PT	LV	SIG.NAME	COLOR	F	X	Y
	01	0	TAPLI-01				
	02	0	EQUAL-01				
	03	0	SYPRE-01				
	04	0	K-REC-01				
	05	0	+ 0.0		S		
	06	0	REPRE-01	0			
	07	0	REPRO-01	6			
	08	0	+ 0.0				
	09	0	+ 0.0				
	10	0	TAPDI-01				
	11	0	+ 0.0				
	12	0	SYNHL-01				
	13	0	SYNHH-01				
	14	0	+ 0.0				
	15	0	CA-EQL01				
	16	0	CA-SYN01				
	17	0	CA-LSW01				
	18	0	+ 0.0				
	19	0	KEY				
	20	0	TA-ACT01				
	21	0	+ 0.0				
	22	0	+15.0				
	23	0	-15.0				
	24	0	+ 5.6				
	25	0	TA-CLK				
	26	0	CA-SAFE				
	27	0	CA-ADR-R				
	28	0	CA-ADR-S				
	29	0	CA-ADR-T				
	30	0	CA-ADR-U				
	31	0	CA-DATA0				
	32	0	CA-DATA1				
	33	0	CA-DATA2				
	34	0	CA-DATA3				
	35	0	CA-DATA4				
	36	0	CA-DATA5				
	37	0	CA-DATA6				
	38	0	CA-DATA7				

./.

GR: 20 (CONTINUATION)
BASIS BOARD

EL: 10 (CONTINUATION)

TYPE	PT	LV	SIG.NAME	COLOR	F	X	Y
	39	0	CA-CHS01				

EL: 11 CONN. LINE AMPLIFIER, CH 1 J11

TYPE	PT	LV	SIG.NAME	COLOR	F	X	Y
	01	0	MONIT-01				
	02	0	+ 0.0		S		
	03	0	LOUFA-01	0			
	04	0	LOUFB-01	6			
	05	0	+ 0.0				
	06	0	INPDI-01				
	07	0	INPAD-01				
	08	0	RECIN-01				
	09	0	+ 0.0				
	10	0	TAPAD-01				
	11	0	TAPMS-01				
	12	0	TAPDI-01				
	13	0	+ 0.0		S		
	14	0	LINFA-01	0			
	15	0	LINFB-01	6			
	16	0	CA-EQL01				
	17	0	CA-SYN01				
	18	0	CA-LSW01				
	19	0	KEY				
	20	0	TA-ACT01				
	21	0	+ 0.0				
	22	0	+15.0				
	23	0	-15.0				
	24	0	+ 5.6				
	25	0	TA-CLK				
	26	0	CA-SAFE				
	27	0	CA-ADR-R				
	28	0	CA-ADR-S				
	29	0	CA-ADR-T				
	30	0	CA-ADR-U				
	31	0	CA-DATA0				
	32	0	CA-DATA1				
	33	0	CA-DATA2				
	34	0	CA-DATA3				
	35	0	CA-DATA4				
	36	0	CA-DATA5				
	37	0	CA-DATA6				
	38	0	CA-DATA7				
	39	0	CA-CHS01				

GR: 20 (CONTINUATION)
BASIS BOARD

EL: 12 CONNECTOR MONO-STEREO-SWITCH J12

TYPE	PT	LV	SIG.NAME	COLOR	F	X	Y
	01	0	INPAD-01				
	02	0	+ 0.0				
	03	0	INPAD-02				
	04	0	+ 0.0				
	05	0	TAPMS-02				
	06	0	+ 0.0				
	07	0	TAPMS-01				
	08	0	+ 0.0				
	09	0	TAPDI-01				
	10	0	+ 0.0				
	11	0	TAPDI-02				
	12	0	+ 0.0				
	13	0	RECIN-02				
	14	0	+ 0.0				
	15	0	RECIN-01				
	16	0					
	17	0					
	18	0					
	19	0	KEY				
	20	0	TA-ACTMO				
	21	0	+ 0.0				
	22	0	+15.0				
	23	0	-15.0				
	24	0	+ 5.6				
	25	0	TA-CLK				
	26	0	CA-SAFE				
	27	0	CA-ADR-R				
	28	0	CA-ADR-S				
	29	0	CA-ADR-T				
	30	0	CA-ADR-U				
	31	0	CA-DATA0				
	32	0	CA-DATA1				
	33	0	CA-DATA2				
	34	0	CA-DATA3				
	35	0	CA-DATA4				
	36	0	CA-DATA5				
	37	0	CA-DATA6				
	38	0	CA-DATA7				
	39	0	CA-MONO				

EL: 13 CONNECTOR HF-DRIVER, CH 2 J13

TYPE	PT	LV	SIG.NAME	COLOR	F	X	Y
	01	0					
	02	0	K-REC-02				
	03	0	+ 0.0				
	04	0	+ 0.0				
	05	0	BIASA-02				
	06	0	BIASB-02				
	07	0	BIASC-02				

./.

GR: 20 (CONTINUATION)
BASIS BOARD

EL: 13 (CONTINUATION)

TYPE	PT	LV	SIG.NAME	COLOR	F	X	Y
	08	0					
	09	0	ERACS-02	7			
	10	0	AFCSW-02				
	11	0	+ 0.0		S		
	12	0	ERAHL-02	6			
	13	0	ERAHM-02	0			
	14	0	ERAHH-02				
	15	0	ERAHO-02				
	16	0	+ 0.0				
	17	0	CA-BAD02				
	18	0	CA-RSW02				
	19	0	KEY				
	20	0	TA-ACT02				
	21	0	+ 0.0				
	22	0	+15.0				
	23	0	-15.0				
	24	0	+ 5.6				
	25	0	TA-CLK				
	26	0	CA-SAFE				
	27	0	CA-ADR-R				
	28	0	CA-ADR-S				
	29	0	CA-ADR-T				
	30	0	CA-ADR-U				
	31	0	CA-DATA0				
	32	0	CA-DATA1				
	33	0	CA-DATA2				
	34	0	CA-DATA3				
	35	0	CA-DATA4				
	36	0	CA-DATA5				
	37	0	CA-DATA6				
	38	0	CA-DATA7				
	39	0	CA-CHS02				

EL: 14 CONN. RECORD AMPLIFIER, CH 2 J14

TYPE	PT	LV	SIG.NAME	COLOR	F	X	Y
	01	0	RECIN-02				
	02	0	EQUAL-02				
	03	0					
	04	0	K-REC-02				
	05	0	+ 0.0				
	06	0	BIASA-02				
	07	0	BIASB-02				
	08	0	BIASC-02				
	09	0	RECHL-02	6			
	10	0	RECHH-02	0			
	11	0	+ 0.0		S		
	12	0	SYNHL-02				
	13	0	SYNHH-02				
	14	0	+ 0.0				

./.

GR: 20 (CONTINUATION)
BASIS BOARD

EL: 14 (CONTINUATION)

TYPE	PT	LV	SIG.NAME	COLOR	F	X	Y
	15	0	AFCSW-02				
	16	0	+ 0.0				
	17	0	CA-BAD02				
	18	0	CA-RSW02				
	19	0	KEY				
	20	0	TA-ACT02				
	21	0	+ 0.0				
	22	0	+15.0				
	23	0	-15.0				
	24	0	+ 5.6				
	25	0	TA-CLK				
	26	0	CA-SAFE				
	27	0	CA-ADR-R				
	28	0	CA-ADR-S				
	29	0	CA-ADR-T				
	30	0	CA-ADR-U				
	31	0	CA-DATA0				
	32	0	CA-DATA1				
	33	0	CA-DATA2				
	34	0	CA-DATA3				
	35	0	CA-DATA4				
	36	0	CA-DATA5				
	37	0	CA-DATA6				
	38	0	CA-DATA7				
	39	0	CA-CHS02				

EL: 15 CONN. REPRODUCE AMPL., CH 2 J15

TYPE	PT	LV	SIG.NAME	COLOR	F	X	Y
	01	0	TAPLI-02				
	02	0	EQUAL-02				
	03	0	SYPRE-02				
	04	0	K-REC-02				
	05	0	+ 0.0				
	06	0	REPRE-02	0			
	07	0	REPRO-02	6			
	08	0	+ 0.0		S		
	09	0	+ 0.0				
	10	0	TAPDI-02				
	11	0	+ 0.0				
	12	0	SYNHL-02				
	13	0	SYNHH-02				
	14	0	+ 0.0				
	15	0	CA-EQL02				
	16	0	CA-SYN02				
	17	0	CA-LSW02				
	18	0	+ 0.0				
	19	0	KEY				
	20	0	TA-ACT02				
	21	0	+ 0.0				

GR: 20 (CONTINUATION)
BASIS BOARD

EL: 15 (CONTINUATION)

TYPE	PT	LV	SIG.NAME	COLOR	F	X	Y
	22	0	+15.0				
	23	0	-15.0				
	24	0	+ 5.6				
	25	0	TA-CLK				
	26	0	CA-SAFE				
	27	0	CA-ADR-R				
	28	0	CA-ADR-S				
	29	0	CA-ADR-T				
	30	0	CA-ADR-U				
	31	0	CA-DATA0				
	32	0	CA-DATA1				
	33	0	CA-DATA2				
	34	0	CA-DATA3				
	35	0	CA-DATA4				
	36	0	CA-DATA5				
	37	0	CA-DATA6				
	38	0	CA-DATA7				
	39	0	CA-CHS02				

EL: 16 CONN. LINE AMPLIFIER, CH 2 J16

TYPE	PT	LV	SIG.NAME	COLOR	F	X	Y
	01	0	MONIT-02				
	02	0	+ 0.0		S		
	03	0	LOUFA-02	0			
	04	0	LOUFB-02	6			
	05	0	+ 0.0				
	06	0	INPDI-02				
	07	0	INPAD-02				
	08	0	RECIN-02				
	09	0	+ 0.0				
	10	0	TAPAD-02				
	11	0	TAPMS-02				
	12	0	TAPDI-02				
	13	0	+ 0.0		S		
	14	0	LINFA-02	0			
	15	0	LINFB-02	6			
	16	0	CA-EQL02				
	17	0	CA-SYN02				
	18	0	CA-LSW02				
	19	0	KEY				
	20	0	TA-ACT02				
	21	0	+ 0.0				
	22	0	+15.0				
	23	0	-15.0				
	24	0	+ 5.6				
	25	0	TA-CLK				
	26	0	CA-SAFE				
	27	0	CA-ADR-R				
	28	0	CA-ADR-S				

./.

GR: 20 (CONTINUATION)
BASIS BOARD

EL: 16 (CONTINUATION)

TYPE	PT	LV	SIG.NAME	COLOR	F	X	Y
	29	0	CA-ADR-T				
	30	0	CA-ADR-U				
	31	0	CA-DATA0				
	32	0	CA-DATA1				
	33	0	CA-DATA2				
	34	0	CA-DATA3				
	35	0	CA-DATA4				
	36	0	CA-DATA5				
	37	0	CA-DATA6				
	38	0	CA-DATA7				
	39	0	CA-CHS02				

EL: 20 CONN. SPOOLING MOTOR CONTR. P01

TYPE	PT	LV	SIG.NAME	COLOR	F	X	Y
	01	0	+ 0.0				
	02	0	+ 0.0				
	03	0	+ 5.6				
	04	0	+ 5.6				
	05	0	+15.0				
	06	0	+15.0				
	07	0	-15.0				
	08	0	TD-CLK				
	09	0	T-TPSPD1				
	10	0	T-TPSPD2				
	11	0	AN-RFTTL				
	12	0	AN-RFTTR				
	13	0	T-TENDL				
	14	0	T-TENDR				
	15	0	T-CLK1				
	16	0	T-CLK2				

EL: 21 CONN. CAPSTAN CONTROL UNIT P02

TYPE	PT	LV	SIG.NAME	COLOR	F	X	Y
	01	0	+ 0.0				
	02	0	+ 0.0				
	03	0	+ 5.6				
	04	0	+ 5.6				
	05	0	+15.0				
	06	0	+15.0				
	07	0	-15.0				
	08	0	-15.0				
	09	0	T-SPDSL1				
	10	0	T-SPDSL2				
	11	0	T-REFSEL				
	12	0	T-SYNCAP				
	13	0	T-CAPON				
	14	0					

./.

GR: 20 (CONTINUATION)
BASIS BOARD

EL: 21 (CONTINUATION)

TYPE	PT	LV	SIG.NAME	COLOR	F	X	Y
	15	0	T-REFINT				
	16	0	T-REFEXT				

EL: 22 CONN. SERIAL REMOTE CONTROL P03

TYPE	PT	LV	SIG.NAME	COLOR	F	X	Y
	01	0	SHIELD				
	02	0	STUBUS2				
	03	0	SNDATA				
	04	0	SNCOMM				
	05	0	RCCOMM				
	06	0	RCVDATA				
	07	0	STUBUS1				
	08	0	GND				
	09	0	SPARE				
	10	0					

EL: 23 CONNECTOR COMMAND UNIT P04

TYPE	PT	LV	SIG.NAME	COLOR	F	X	Y
	01	0	0.0 VCU				
	02	0	T-DATA0				
	03	0	0.0 VCU				
	04	0	T-DATA1				
	05	0	0.0 VCU				
	06	0	T-DATA2				
	07	0	0.0 VCU				
	08	0	T-DATA3				
	09	0	0.0 VCU				
	10	0	T-DATA4				
	11	0	0.0 VCU				
	12	0	T-DATA5				
	13	0	0.0 VCU				
	14	0	T-DATA6				
	15	0	0.0 VCU				
	16	0	T-DATA7				
	17	0	0.0 VCU				
	18	0	T-ADRX				
	19	0	0.0 VCU				
	20	0	T-ADRY				
	21	0	0.0 VCU				
	22	0	T-ADRZ				
	23	0	0.0 VCU				
	24	0					
	25	0	0.0 VCU				
	26	0	T-RW				
	27	0	0.0 VCU				
	28	0					
	29	0	0.0 VCU				

./.

GR: 20 (CONTINUATION)
BASIS BOARD

EL: 23 (CONTINUATION)

TYPE	PT	LV	SIG.NAME	COLOR	F	X	Y
	30	0					
	31	0	0.0 VCU				
	32	0					
	33	0	0.0 VCU				
	34	0	T-CUSTR				
	35	0	0.0 VCU				
	36	0					
	37	0	+ 0.0				
	38	0	+ 5.6				
	39	0	+ 0.0				
	40	0	+ 5.6				

EL: 24 CONN. TO BUS CONNECTOR BOARD J17

TYPE	PT	LV	SIG.NAME	COLOR	F	X	Y
	01	0	T-REFEXT				
	02	0	T-DIR				
	03	0	T-CLK1				
	04	0					
	05	0					
	06	0	T-SADA				
	07	0	T-SADB				
	08	0	T-SADC				
	09	0	T-READSL				
	10	0	T-WRTSL				
	11	0	T-DT-CH1				
	12	0	T-DT-CH2				
	13	0	T-DT-CH3				
	14	0	T-DT-MP				
	15	0	T-DT-RP1				
	16	0	T-DT-RP2				
	17	0	T-DT-SJM				
	18	0	T-DT-RES				

EL: 25 CONN. TO BUS CONNECTOR BOARD J18

TYPE	PT	LV	SIG.NAME	COLOR	F	X	Y
	01	0					
	02	0					
	03	0	+ 0.0				
	04	0	+ 0.0				
	05	0	+15.0				
	06	0	+15.0				
	07	0	-15.0				
	08	0	-15.0				
	09	0	+ 0.0				
	10	0	+ 0.0				
	11	0	+ 5.6				
	12	0	+ 5.6				

./.

GR: 20 (CONTINUATION)
BASIS BOARD

EL: 25 (CONTINUATION)

TYPE	PT	LV	SIG.NAME	COLOR	F	X	Y
	13	0	+ 0.0				
	14	0	+ 0.0				
	15	0					
	16	0					
	17	0	+ 0.0				
	18	0	+ 0.0				
	19	0	+24.0				
	20	0	+24.0				

EL: 26 CONN. TO VU-METER PANEL, CH1 J19

TYPE	PT	LV	SIG.NAME	COLOR	F	X	Y
N	01	0	+ 0.0		S		
N	02	0	LOUFA-01	0			
N	03	0	LOUFB-01	6			
N	04	0	+ 0.0		S		
N	05	0	INPDI-01	0			
N	06	0	INPAD-01	6			
N	07	0	+ 0.0		S		
N	08	0	TAPAD-01	6			
N	09	0	TAPMS-01	0			
	10	0	KEY				

EL: 27 CONN. TO VU-METER PANEL, CH2 J20

TYPE	PT	LV	SIG.NAME	COLOR	F	X	Y
N	01	0	+ 0.0		S		
N	02	0	LOUFA-02	0			
N	03	0	LOUFB-02	6			
N	04	0	+ 0.0		S		
N	05	0	INPDI-02	0			
N	06	0	INPAD-02	6			
N	07	0	+ 0.0		S		
N	08	0	TAPAD-02	6			
N	09	0	TAPMS-02	0			
	10	0	KEY				

EL: 28 CONN. TO MONITOR AMPLIFIER J21

TYPE	PT	LV	SIG.NAME	COLOR	F	X	Y
	01	0	KEY				
N	02	0	MONITAMP	9			
N	03	0	+ 0.0		S		
N	04	0	-15.0		6		
N	05	0	+15.0		2		
N	06	0	+ 0.0		0		

GR: 20 (CONTINUATION)
BASIS BOARD

EL: 29 CONNECTOR TO MASTER PANEL J22

TYPE	PT	LV	SIG.NAME	COLOR	F	X	Y
N	01	0	MONIT-02	0			
N	02	0	+ 0.0		S		
N	03	0	MONIT-01	6			
N	04	0	+ 0.0		S		
N	05	0	MONITAMP	9			
	06	0	KEY				

EL: 30 WIRE FIELD (SOLENOIDS)

TYPE	PT	LV	SIG.NAME	COLOR	F	X	Y
U	01	0	K-PRESS	8			
U	02	0	K-EDIT	5			
U	03	0	K-EDIT	5			
U	04	0	K-LIFT	9			
U	05	0	K-BRAKE	1			
U	06	0	K-EDIT	5			

EL: 31 WIRE FIELD (POWER SUP. +SOLEN.)

TYPE	PT	LV	SIG.NAME	COLOR	F	X	Y
U	01	0	+24.0	7			
U	02	0	+24.0	7			
U	03	0	+24.0	7			
U	04	0	+24.0	7			
U	05	0	+24.0	7			
U	06	0	+24.0	7			
L	07	0	+24.0	7			
L	08	0	+ 0.0	4			
U	09	0	T-SUPVON	5			
L	10	0	+ 0.0	4			
L	11	0	+ 0.0	4			
U	12	0	T-PWRON	1			

EL: 32 WIRE FIELD (POWER SUPPLY)

TYPE	PT	LV	SIG.NAME	COLOR	F	X	Y
L	01	0	+ 5.6	3			
L	02	0	+ 5.6	3			
L	03	0	+ 0.0	0			
L	04	0	+ 0.0	0			
L	05	0	+15.0	2			
L	06	0	-15.0	6			

```
*****************************************************************************************************************************
*  S T U D E R  *      L O C A T I O N    P I N    L I S T      *   83/02/25 * 08:28      *   P A G E     12    *
*****************************************************************************************************************************
TAPE TRANSPORT & AUDIO CIRCUITS * STUDER A810 *                1.810.090.00            81/01/29
```

GR: 20 (CONTINUATION)
BASIS BOARD

EL: 33 WIRE FIELD (HEAD BLOCK ASSEMBLY)

TYPE	PT	LV	SIG.NAME	COLOR	F	X	Y
U	01	0	+ 0.0	0			
U	02	0	+15.0	2			
U	03	0	-15.0	6			
U	04	0	+ 5.6	3			

GR: 21 1.810.300.00
COMMAND UNIT

EL: 01 CONNECTOR TO BASIS BOARD, EL 23

TYPE	PT	LV	SIG.NAME	COLOR	F	X	Y
	01	0	0.0 VCU				
	02	0	T-DATA0				
	03	0	0.0 VCU				
	04	0	T-DATA1				
	05	0	0.0 VCU				
	06	0	T-DATA2				
	07	0	0.0 VCU				
	08	0	T-DATA3				
	09	0	0.0 VCU				
	10	0	T-DATA4				
	11	0	0.0 VCU				
	12	0	T-DATA5				
	13	0	0.0 VCU				
	14	0	T-DATA6				
	15	0	0.0 VCU				
	16	0	T-DATA7				
	17	0	0.0 VCU				
	18	0	T-ADRX				
	19	0	0.0 VCU				
	20	0	T-ADRY				
	21	0	0.0 VCU				
	22	0	T-ADRZ				
	23	0	0.0 VCU				
	24	0					
	25	0	0.0 VCU				
	26	0	T-RW				
	27	0	0.0 VCU				
	28	0					
	29	0					
	30	0					
	31	0					
	32	0					
	33	0	0.0 VCU				
	34	0	T-CUSTR				
	35	0	0.0 VCU				
	36	0					
	37	0	+ 0.0				
	38	0	+ 5.6				
	39	0	+ 0.0				
	40	0	+ 5V-LED				

EL: 02 CONNECTOR TO DISPLAY BOARD

TYPE	PT	LV	SIG.NAME	COLOR	F	X	Y
	01	0	T-DATA0				
	02	0	T-DATA1				
	03	0	T-DATA2				
	04	0	T-DATA3				
	05	0	T-DATA4				
	06	0	T-DATA5				

./.

GR: 21 (CONTINUATION)
COMMAND UNIT

EL: 02 (CONTINUATION)

TYPE	PT	LV	SIG.NAME	COLOR	F	X	Y
	07	0	T-DATA6				
	08	0	T-DATA7				
	09	0	T-ADRX				
	10	0	T-ADRY				
	11	0	T-CUSTR				
	12	0	T-SL1				
	13	0	T-ADRZ				
	14	0	+ 0.0				
	15	0	+ 5.6				

```
*****************************************************************************************************************************
*  S T U D E R  *      L O C A T I O N    P I N    L I S T      *   83/02/25 * 08:28      *   P A G E     13    *
*****************************************************************************************************************************
TAPE TRANSPORT & AUDIO CIRCUITS * STUDER A810 *                1.810.090.00            81/01/29
```

GR: 22
SERIAL REMOTE CONTROL

EL: 01 FROM GR 20, EL 22 J01

TYPE	PT	LV	SIG.NAME	COLOR	F	X	Y
	01	0	SHIELD				
	02	0	SNDATA				
	03	0	RCCOMM				
	04	0	STUBUS1				
	05	0	SPARE				
	06	0	STUBUS2				
	07	0	SNCOMM				
	08	0	RCVDATA				
	09	0	GND				

GR: 23 1.810.738.00
PARALLEL REMOTE CONTROL

EL: 01 CONN. PARALLEL REMOTE CONTR. J01

TYPE	PT	LV	SIG.NAME	COLOR	F	X	Y
B	01	0	+ 0.0				
B	02	0	BR-REW				
B	03	0	BR-FORW				
B	04	0	KEY				
B	05	0	SR-VRSPD				
B	06	0	SR-TRANS				
B	07	0	TO-CLK				
B	08	0	BR-FAD				
B	09	0	BR-REC				
B	10	0	TO-DIR				
B	11	0	FAD1				
B	12	0	FAD2				
B	13	0	T-REFEXT				
B	14	0	+ 0.0				
B	15	0	BR-PLAY				
B	16	0	BR-STOP				
B	17	0	SR-LIFT				
B	18	0	SR-LOC1				
B	19	0	SR-REC				
B	20	0	SR-REW				
B	21	0	SR-FORW				
B	22	0	SR-PLAY				
B	23	0	SR-STOP				
B	24	0	KEY				
B	25	0	+24.0				

EL: 02 FROM GR 25, EL 02

TYPE	PT	LV	SIG.NAME	COLOR	F	X	Y
	01	0	+ 0.0				
	02	0	+ 0.0				
	03	0	+ 5.6				
	04	0	+ 5.6				
	05	0	+15.0				
	06	0	-15.0				
	07	0	T-SADA				
	08	0	T-SADB				
	09	0	T-SADC				
	10	0	T-READSL				
	11	0	T-WRTSL				
	12	0	T-DT-RP1				
	13	0	T-DT-RP2				
	14	0	T-DT-SJM				
	15	0	T-REFEXT				
	16	0	T-DIR				
	17	0	T-CLK1				
	18	0					
	19	0					
	20	0	+ 0.0				
	21	0					

./.

GR: 23 (CONTINUATION)
PARALLEL REMOTE CONTROL

EL: 02 (CONTINUATION)

TYPE	PT	LV	SIG.NAME	COLOR	F	X	Y
	22	0	+ 0.0				
	23	0					
	24	0	+24.0				
	25	0	+ 0.0				
	26	0	+ 0.0				

```
*****************************************************************************************************************
*  S T U D E R  *      L O C A T I O N    P I N    L I S T      *   83/02/25 * 08:28     *  P A G E    14   *
*****************************************************************************************************************
TAPE TRANSPORT & AUDIO CIRCUITS * STUDER A810 *              1.810.090.00            81/01/29
```

GR: 24 1.810.760.00
SPOOLING MOTOR CONTROL

EL: 01 FROM GR 20, EL 20

TYPE	PT	LV	SIG.NAME	COLOR	F	X	Y
	01	0	+ 0.0				
	02	0	+ 0.0				
	03	0	+ 5.6				
	04	0	+ 5.6				
	05	0	+15.0				
	06	0	+15.0				
	07	0	-15.0				
	08	0	TD-CLK				
	09	0	T-TPSPD1				
	10	0	T-TPSPD2				
	11	0	AN-RFTTL				
	12	0	AN-RFTTR				
	13	0	T-TENDL				
	14	0	T-TENDR				
	15	0	T-CLK1				
	16	0	T-CLK2				

EL: 02 CONN. TAPE TENS. UNIT, LEFT J02

TYPE	PT	LV	SIG.NAME	COLOR	F	X	Y
	01	0	+ 0.0				
	02	0	+ 0.0				
	03	0	+ 5.6				
	04	0	+ 5.6				
	05	0	+15.0				
	06	0	+15.0				
	07	0	-15.0				
	08	0	-15.0				
	09	0					
	10	0					
	11	0	AN-TTL				
	12	0	T-TENDL				
	13	0					
	14	0					
	15	0					
	16	0					

EL: 03 CONN. TAPE TENS. UNIT, RIGHT J03

TYPE	PT	LV	SIG.NAME	COLOR	F	X	Y
	01	0	+ 0.0				
	02	0	+ 0.0				
	03	0	+ 5.6				
	04	0	+ 5.6				
	05	0	+15.0				
	06	0	+15.0				
	07	0	-15.0				
	08	0	-15.0				
	09	0					

./.

GR: 24 (CONTINUATION)
SPOOLING MOTOR CONTROL

EL: 03 (CONTINUATION)

TYPE	PT	LV	SIG.NAME	COLOR	F	X	Y
	10	0					
	11	0	AN-TTR				
	12	0	T-TENDR				
	13	0	T-CLK1				
	14	0	T-CLK2				
	15	0					
	16	0					

EL: 04 TRANSFORMER FEED

TYPE	PT	LV	SIG.NAME	COLOR	F	X	Y
U	01	0	ACA-125	2			
U	02	0	ACB-125	0			

EL: 05 CONN. BOARD SPOOLING MOTOR, LEFT

TYPE	PT	LV	SIG.NAME	COLOR	F	X	Y
Y	01	0	ACML-H	6			
Y	02	0	ACML-0	0			

EL: 06 CONN. BOARD SPOOLING MOTOR, RIGH

TYPE	PT	LV	SIG.NAME	COLOR	F	X	Y
Y	01	0	ACMR-H	4			
Y	02	0	ACMR-0	0			

GR: 25 1.810.701.00
BUS CONNECTOR BOARD

EL: 01 CONN. VU-METER PANEL EXT. P01

TYPE	PT	LV	SIG.NAME	COLOR	F	X	Y
	01	0	+ 0.0				
	02	0	+ 0.0				
	03	0	+ 5.6				
	04	0	+ 5.6				
	05	0	+15.0				
	06	0	-15.0				
	07	0	T-SADA				
	08	0	T-SADB				
	09	0	T-SADC				
	10	0	T-READSL				
	11	0	T-WRTSL				
	12	0	T-DT-CH1				
	13	0	T-DT-CH2				
	14	0	T-DT-CH3				
	15	0	T-DT-MP				
	16	0					
	17	0					
	18	0					
	19	0					
	20	0	+ 0.0				
	21	0	T-VARSPD				
	22	0	+ 0.0				
	23	0	T-REFEXT				
	24	0	+24.0				
	25	0	+ 0.0				
	26	0	+ 0.0				

EL: 02 CONN. REMOTE CONTROL P02

TYPE	PT	LV	SIG.NAME	COLOR	F	X	Y
	01	0	+ 0.0				
	02	0	+ 0.0				
	03	0	+ 5.6				
	04	0	+ 5.6				
	05	0	+15.0				
	06	0	-15.0				
	07	0	T-SADA				
	08	0	T-SADB				
	09	0	T-SADC				
	10	0	T-READSL				
	11	0	T-WRTSL				
	12	0	T-DT-RP1				
	13	0	T-DT-RP2				
	14	0	T-DT-SJM				
	15	0	T-REFEXT				
	16	0	T-DIR				
	17	0	T-CLK1				
	18	0					
	19	0					
	20	0	+ 0.0				

./.

```
*****************************************************************************************************************
*  S T U D E R  *      L O C A T I O N    P I N    L I S T      *   83/02/25 * 08:28     *  P A G E    15   *
*****************************************************************************************************************
TAPE TRANSPORT & AUDIO CIRCUITS * STUDER A810 *              1.810.090.00            81/01/29
```

GR: 25 (CONTINUATION)
BUS CONNECTOR BOARD

EL: 02 (CONTINUATION)

TYPE	PT	LV	SIG.NAME	COLOR	F	X	Y
	21	0					
	22	0	+ 0.0				
	23	0					
	24	0	+24.0				
	25	0	+ 0.0				
	26	0	+ 0.0				

EL: 03 CONNECTOR COMMANDS CH1 P03

TYPE	PT	LV	SIG.NAME	COLOR	F	X	Y
	01	0	+ 0.0				
	02	0	+ 0.0				
	03	0	+ 5.6				
	04	0	+ 5.6				
	05	0	+15.0				
	06	0	-15.0				
	07	0	T-SADA				
	08	0	T-SADB				
	09	0	T-SADC				
	10	0	T-READSL				
	11	0	T-WRTSL				
	12	0	T-DT-CH1				
	13	0					
	14	0					
	15	0					
	16	0	+24.0				

EL: 04 CONNECTOR COMMANDS CH2 P04

TYPE	PT	LV	SIG.NAME	COLOR	F	X	Y
	01	0	+ 0.0				
	02	0	+ 0.0				
	03	0	+ 5.6				
	04	0	+ 5.6				
	05	0	+15.0				
	06	0	-15.0				
	07	0	T-SADA				
	08	0	T-SADB				
	09	0	T-SADC				
	10	0	T-READSL				
	11	0	T-WRTSL				
	12	0	T-DT-CH2				
	13	0					
	14	0					
	15	0					
	16	0	+24.0				

GR: 25 (CONTINUATION)
BUS CONNECTOR BOARD

EL: 05 CONNECTOR COMMANDS CH3 P05

TYPE	PT	LV	SIG.NAME	COLOR	F	X	Y
	01	0	+ 0.0				
	02	0	+ 0.0				
	03	0	+ 5.6				
	04	0	+ 5.6				
	05	0	+15.0				
	06	0	-15.0				
	07	0	T-SADA				
	08	0	T-SADB				
	09	0	T-SADC				
	10	0	T-READSL				
	11	0	T-WRTSL				
	12	0	T-DT-CH3				
	13	0					
	14	0					
	15	0					
	16	0	+24.0				

EL: 06 CONN. COMMANDS MASTER PANEL P06

TYPE	PT	LV	SIG.NAME	COLOR	F	X	Y
	01	0	+ 0.0				
	02	0	+ 0.0				
	03	0	+ 5.6				
	04	0	+ 5.6				
	05	0	+15.0				
	06	0	-15.0				
	07	0	T-SADA				
	08	0	T-SADB				
	09	0	T-SADC				
	10	0	T-READSL				
	11	0	T-WRTSL				
	12	0	T-DT-MP				
	13	0	T-REFEXT				
	14	0	T-ADOPT1				
	15	0	T-VARSPD				
	16	0	+24.0				

EL: 07 CONN. COMM. VARI SPEED PANEL P07

TYPE	PT	LV	SIG.NAME	COLOR	F	X	Y
	01	0	+ 0.0				
	02	0	+ 0.0				
	03	0	+ 5.6				
	04	0	+ 5.6				
	05	0	+15.0				
	06	0	-15.0				
	07	0	T-SADA				
	08	0	T-SADB				
	09	0	T-SADC				

./.

GR: 25 (CONTINUATION)
BUS CONNECTOR BOARD

EL: 07 (CONTINUATION)

TYPE	PT	LV	SIG.NAME	COLOR	F	X	Y
	10	0	T-READSL				
	11	0	T-WRTSL				
	12	0	T-DT-MP				
	13	0	T-REFEXT				
	14	0	T-ADOPT1				
	15	0	T-VARSPD				
	16	0	+24.0				

```
*****************************************************************************************************************
*  S T U D E R  *      L O C A T I O N    P I N    L I S T      *   83/02/25 * 08:28     *   P A G E    16   *
*****************************************************************************************************************
TAPE TRANSPORT & AUDIO CIRCUITS * STUDER A810 *              1.810.090.00            81/01/29
```

GR: 26 1.810.761.00
CAPSTAN CONTROL UNIT

EL: 01 FROM GR 20, EL 21

TYPE	PT	LV	SIG.NAME	COLOR	F	X	Y
	01	0	+ 0.0				
	02	0	+ 0.0				
	03	0	+ 5.6				
	04	0	+ 5.6				
	05	0	+15.0				
	06	0	+15.0				
	07	0	-15.0				
	08	0	-15.0				
	09	0	T-SPDSL1				
	10	0	T-SPDSL2				
	11	0	T-REFSEL				
	12	0	T-SYNCAP				
	13	0	T-CAPON				
	14	0					
	15	0	T-REFINT				
	16	0	T-REFEXT				

EL: 02 TRANSFORMER FEED

TYPE	PT	LV	SIG.NAME	COLOR	F	X	Y
U	01	0	ACA-130	6			
U	02	0	ACB-130	6			

EL: 03 CONNECTOR CAPSTAN MOTOR

TYPE	PT	LV	SIG.NAME	COLOR	F	X	Y
Y	01	0	ACMC-A	8			
Y	02	0	ACMC-B	4			
Y	03	0	ACMC-C	5			
Y	04	0	AN-TACHO	2			
Y	05	0	O-TACHO	9			

EL: 04 CONN. PHASE SHIFT CAPACITOR

TYPE	PT	LV	SIG.NAME	COLOR	F	X	Y
Y	01	0	ACMC-B	4			
Y	02	0	ACMC-C	5			

EL: 05 PHASE SHIFT CAPACITOR

TYPE	PT	LV	SIG.NAME	COLOR	F	X	Y
	01	0	ACMC-B	4			
	02	0	ACMC-C	5			

GR: 26 (CONTINUATION)
CAPSTAN CONTROL UNIT

EL: 06 CAPACITIVE SENSOR

TYPE	PT	LV	SIG.NAME	COLOR	F	X	Y
	04	0	AN-TACHO	2			
	05	0	O-TACHO	9			

GR: 27 1.810.730.81
TAPE TENSION UNIT LEFT

EL: 01 FROM GR 24, EL 02 J01

TYPE	PT	LV	SIG.NAME	COLOR	F	X	Y
	01	0	+ 0.0				
	02	0	+ 0.0				
	03	0	+ 5.6				
	04	0	+ 5.6				
	05	0	+15.0				
	06	0	+15.0				
	07	0	-15.0				
	08	0	-15.0				
	09	0					
	10	0					
	11	0	AN-TTL				
	12	0	T-TENDL				
	13	0					
	14	0					
	15	0					
	16	0					

EL: 02 CONN. TAPE END SW LEFT J02

TYPE	PT	LV	SIG.NAME	COLOR	F	X	Y
N	01	0	T-LED	1			
N	02	0	+ 5.6	2			
N	03	0	T-TNDL	4			
	04	0	KEY				

EL: 03 EDIT SOLENOID, LEFT

TYPE	PT	LV	SIG.NAME	COLOR	F	X	Y
X	01	0	+24.0	7			
X	02	0	K-EDIT	5			

EL: 04 TAPE END SW. LEFT WIRE FIELD

TYPE	PT	LV	SIG.NAME	COLOR	F	X	Y
U	01	0	T-LED	1			
U	02	0	+ 5.6	2			
U	03	0	T-TNDL	4			

```
*****************************************************************************************************************
*  S T U D E R  *      L O C A T I O N    P I N    L I S T      *   83/02/25 * 08:28     *   P A G E    17   *
*****************************************************************************************************************
TAPE TRANSPORT & AUDIO CIRCUITS * STUDER A810 *              1.810.090.00            81/01/29
```

GR: 28 1.810.728.81
TAPE TENSION UNIT RIGHT

EL: 01 FROM GR 24, EL 03 J01

TYPE	PT	LV	SIG.NAME	COLOR	F	X	Y
	01	0	+ 0.0				
	02	0	+ 0.0				
	03	0	+ 5.6				
	04	0	+ 5.6				
	05	0	+15.0				
	06	0	+15.0				
	07	0	-15.0				
	08	0	-15.0				
	09	0					
	10	0					
	11	0	AN-TTR				
	12	0	T-TENDR				
	13	0	T-CLK1				
	14	0	T-CLK2				
	15	0					
	16	0					

EL: 02 CONN. TAPE END SW RIGHT J02

TYPE	PT	LV	SIG.NAME	COLOR	F	X	Y
N	01	0	T-LED	1			
N	02	0	+ 5.6	2			
N	03	0	T-TNDR	4			
	04	0	KEY				

EL: 03 EDIT SOLENOID, RIGHT

TYPE	PT	LV	SIG.NAME	COLOR	F	X	Y
X	01	0	+24.0	7			
X	02	0	K-EDIT	5			

EL: 04 CONN. MOVE SENSOR J03

TYPE	PT	LV	SIG.NAME	COLOR	F	X	Y
N	01	0	+ 0.0	0			
N	02	0	+ 5.6	2			
N	03	0	T-CLK1	1			
N	04	0	T-CLK2	3			
	05	0	KEY				

EL: 05 MOVE SENSOR WIRE FIELD

TYPE	PT	LV	SIG.NAME	COLOR	F	X	Y
U	01	0	+ 0.0	0			
U	02	0	+ 5.6	2			
U	03	0	T-CLK1	1			
U	04	0	T-CLK2	3			

GR: 28 (CONTINUATION)
TAPE TENSION UNIT RIGHT

EL: 06 TAPE END SW. RIGHT WIRE FIELD

TYPE	PT	LV	SIG.NAME	COLOR	F	X	Y
U	01	0	T-LED	1			
U	02	0	+ 5.6	2			
U	03	0	T-TNDR	4			

GR: 29
PRESS-SOLENOID

EL: 01 PRESS SOLENOID

TYPE	PT	LV	SIG.NAME	COLOR	F	X	Y
X	01	0	+24.0	7			
X	02	0	K-PRESS	8			

```
*****************************************************************************************************************
*  S T U D E R  *      L O C A T I O N     P I N     L I S T      *    83/02/25 * 08:28      *   P A G E    18    *
*****************************************************************************************************************
TAPE TRANSPORT & AUDIO CIRCUITS * STUDER A810 *                1.810.090.00              81/01/29
```

GR: 30
LIFT SOLENOID

EL: 01 LIFT SOLENOID

TYPE	PT	LV	SIG.NAME	COLOR	F	X	Y
X	01	0	+24.0	7			
X	02	0	K-LIFT	9			

GR: 31 1.810.165.00
BRAKE CHASSIS

EL: 01 BRAKE SOLENOID

TYPE	PT	LV	SIG.NAME	COLOR	F	X	Y
X	01	0	+24.0	7			
X	02	0	K-BRAKE	1			

EL: 02 EDIT-BRAKE SOLENOID

TYPE	PT	LV	SIG.NAME	COLOR	F	X	Y
X	01	0	+24.0	7			
X	02	0	K-EDIT	5			

GR: 32
HEAD BLOCK ASSEMBLY

EL: 01 CONN. HEAD BLOCK ASSEMBLY P01

TYPE	PT	LV	SIG.NAME	COLOR	F	X	Y
B	01	0	REPRE-01	0			
B	02	0	REPRO-01	6			
B	03	0	+15.0	2			
	04	0					
B	05	0	RECHL-01	6			
B	06	0	RECHH-01	0			
B	07	0	+ 0.0	0			
B	08	0	+ 5.6	3			
B	09	0	REPHH-TC	0			
B	10	0	RECHH-TC	0			
B	11	0	ERAHH-TC	0			
B	12	0	ERAHL-01	6			
B	13	0	ERAHM-01	0			
B	14	0	REPRE-02	0			
B	15	0	REPRO-02	6			
B	16	0	-15.0	6			
	17	0					
B	18	0	RECHL-02	6			
B	19	0	RECHH-02	0			
B	20	0	ERACS-02				
B	21	0	REPHL-TC	6			
B	22	0	RECHL-TC	6			
B	23	0	ERAHL-TC	6			
B	24	0	ERAHL-02	6			
B	25	0	ERAHM-02	0			

EL: 02 REPRODUCE PREAMPLIFIER

TYPE	PT	LV	SIG.NAME	COLOR	F	X	Y
L	01	0	+15.0	2			
L	02	0	REPRE-01	0			
L	03	0	REPRO-01	6			
L	04	0	+ 0.0	S			
L	05	0	+ 0.0	S			
L	06	0	REPRO-02	6			
L	07	0	REPRE-02	0			
L	08	0	-15.0	6			
L	09	0					
L	10	0					
L	11	0	REPHL-01	0			
L	12	0	REPHH-01	1			
L	13	0	REPHL-02	0			
L	14	0	REPHH-02	1			

```
*****************************************************************************************************************
*  S T U D E R  *      L O C A T I O N     P I N     L I S T      *    83/02/25 * 08:28      *   P A G E    19    *
*****************************************************************************************************************
TAPE TRANSPORT & AUDIO CIRCUITS * STUDER A810 *                1.810.090.00              81/01/29
```

GR: 33
CONNECTOR VU-METER PANEL, EXTERN

EL: 01 FROM GR 25, EL 01 J01

TYPE	PT	LV	SIG.NAME	COLOR	F	X	Y
	01	0	+ 0.0				
	02	0	+ 5.6				
	03	0	+15.0				
	04	0	T-SADA				
	05	0	T-SADC				
	06	0	T-WRTSL				
	07	0	T-DT-CH2				
	08	0	T-DT-MP				
	09	0					
	10	0					
	11	0	T-VARSPD				
	12	0	T-REFEXT				
	13	0	+ 0.0				
	14	0	+ 0.0				
	15	0	+ 5.6				
	16	0	-15.0				
	17	0	T-SADB				
	18	0	T-READSL				
	19	0	T-DT-CH1				
	20	0	T-DT-CH3				
	21	0					
	22	0					
	23	0	+ 0.0				
	24	0	+ 0.0				
	25	0	+24.0				

GR: 34
CONNECTOR VU-METER PANEL, EXTERN (AUDIO)

EL: 01 FROM GR 20, EL 26+27 P01

TYPE	PT	LV	SIG.NAME	COLOR	F	X	Y
A	01	0	TAPMS-01	0			
A	02	0	+ 0.0	S			
A	03	0	INPAD-01	6			
	04	0					
A	05	0	LOUFA-01	0			
	06	0					
	07	0					
A	08	0	TAPMS-02	0			
A	09	0	+ 0.0	S			
A	10	0	INPAD-02	6			
	11	0					
A	12	0	LOUFA-02	0			
A	13	0	GND	0			
A	14	0	TAPAD-01	6			
A	15	0	+ 0.0	S			
A	16	0	INPDI-01	0			
A	17	0	+ 0.0	S			
A	18	0	LOUFB-01	6			
	19	0					
	20	0					
A	21	0	TAPAD-02	6			
A	22	0	+ 0.0	S			
A	23	0	INPDI-02	0			
A	24	0	+ 0.0	S			
A	25	0	LOUFB-02	6			

EL: 02 GROUND CONN. TO GR34, EL01, PT13

TYPE	PT	LV	SIG.NAME	COLOR	F	X	Y
L	01	0	GND	0			

GR: 35 1.820.749.00
INTERFERENCE FILTER, CH01

EL: 01 CONNECTOR XLR, INPUT J01

TYPE	PT	LV	SIG.NAME	COLOR	F	X	Y
	01	0	GND				
	02	0	LINSA-01				
	03	0	LINSB-01				

EL: 02 CONNECTOR XLR, OUTPUT P01

TYPE	PT	LV	SIG.NAME	COLOR	F	X	Y
	01	0	GND				
	02	0	LOUSA-01				
	03	0	LOUSB-01				

EL: 03 CONNECTOR LINE FILTER, INP. P01

TYPE	PT	LV	SIG.NAME	COLOR	F	X	Y
D	01	0	LINFB-01	6			
	02	0	KEY				
D	03	0	+ 0.0	S			
D	04	0	LINFA-01	0			

EL: 04 CONNECTOR LINE FILTER, OUTP. P02

TYPE	PT	LV	SIG.NAME	COLOR	F	X	Y
D	01	0	LOUFB-01	6			
	02	0	KEY				
D	03	0	+ 0.0	S			
D	04	0	LOUFA-01	0			

```
*****************************************************************************************************************************
*  S T U D E R  *      L O C A T I O N    P I N    L I S T      *   83/02/25 * 08:28      *   P A G E     20    *
*****************************************************************************************************************************
TAPE TRANSPORT & AUDIO CIRCUITS * STUDER A810 *              1.810.090.00            81/01/29

GR: 36   1.820.749.00
INTERFERENCE FILTER, CH02
*****************************************

EL: 01  CONNECTOR XLR, INPUT          J01
-----------------------------------------
TYPE PT  LV SIG.NAME COLOR F   X     Y
---- --- -- -------- ----- - ----- -----
     01  0  GND
     02  0  LINSA-02
     03  0  LINSB-02

EL: 02  CONNECTOR XLR, OUTPUT         P01
-----------------------------------------
TYPE PT  LV SIG.NAME COLOR F   X     Y
---- --- -- -------- ----- - ----- -----
     01  0  GND
     02  0  LOUSA-02
     03  0  LOUSB-02

EL: 03  CONNECTOR LINE FILTER, INP.   P01
-----------------------------------------
TYPE PT  LV SIG.NAME COLOR F   X     Y
---- --- -- -------- ----- - ----- -----
D    01  0  LINFB-02 6
     02  0  KEY
D    03  0  + 0.0    S
D    04  0  LINFA-02 0

EL: 04  CONNECTOR LINE FILTER, OUTP.  P02
-----------------------------------------
TYPE PT  LV SIG.NAME COLOR F   X     Y
---- --- -- -------- ----- - ----- -----
D    01  0  LOUFB-02 6
     02  0  KEY
D    03  0  + 0.0    S
D    04  0  LOUFA-02 0

GR: 37   1.820.749.00
INTERFERENCE FILTER, CHTC
*****************************************

EL: 01  CONNECTOR XLR, INPUT          J01
-----------------------------------------
TYPE PT  LV SIG.NAME COLOR F   X     Y
---- --- -- -------- ----- - ----- -----
     01  0  GND
     02  0  LINSA-TC
     03  0  LINSB-TC

EL: 02  CONNECTOR XLR, OUTPUT         P01
-----------------------------------------
TYPE PT  LV SIG.NAME COLOR F   X     Y
---- --- -- -------- ----- - ----- -----
     01  0  GND
     02  0  LOUSA-TC
     03  0  LOUSB-TC

EL: 03  CONNECTOR LINE FILTER, INP.   P01
-----------------------------------------
TYPE PT  LV SIG.NAME COLOR F   X     Y
---- --- -- -------- ----- - ----- -----
D    01  0  LINFB-TC 6
     02  0  KEY
D    03  0  + 0.0    S
D    04  0  LINFA-TC 0

EL: 04  CONNECTOR LINE FILTER, OUTP.  P02
-----------------------------------------
TYPE PT  LV SIG.NAME COLOR F   X     Y
---- --- -- -------- ----- - ----- -----
D    01  0  LOUFB-TC 6
     02  0  KEY
D    03  0  + 0.0    S
D    04  0  LOUFA-TC 0

GR: 38   1.810.315.00
MASTER + MONITOR CONTROL UNIT
*****************************************

EL: 01  CONNECTOR, HEAD PHONES
-----------------------------------------
TYPE PT  LV SIG.NAME COLOR F   X     Y
---- --- -- -------- ----- - ----- -----
L    01A 0  MONIT-01 6
L    01B 0  MONIT-01 6
L    02A 0  MONIT-02 0
L    02B 0  MONIT-02 0
L    03A 0  + 0.0    S

EL: 02  LEVEL POTENTIOMETER
-----------------------------------------
TYPE PT  LV SIG.NAME COLOR F   X     Y
---- --- -- -------- ----- - ----- -----
L    04A 0  + 0.0    S
L    05A 0  MONITAMP 9
L    06A 0  MONITAMP 6

EL: 03  MASTER SWITCHING BOARD
-----------------------------------------
TYPE PT  LV SIG.NAME COLOR F   X     Y
---- --- -- -------- ----- - ----- -----
U    01  0  MONIT-01 6
U    02  0  MONIT-02 0
U    03  0  MONITAMP 9
U    04B 0  + 0.0    4
U    06B 0  MONITAMP 6

EL: 04  MASTER CONTROL BOARD
-----------------------------------------
TYPE PT  LV SIG.NAME COLOR F   X     Y
---- --- -- -------- ----- - ----- -----
     01  0  + 0.0
     02  0  + 0.0
     03  0  + 5.6
     04  0  + 5.6
     05  0  +15.0
     06  0  -15.0
     07  0  T-SADA
     08  0  T-SADB
     09  0  T-SADC
     10  0  T-READSL
     11  0  T-WRTSL
     12  0  T-DT-MP
     13  0  T-REFEXT
     14  0  T-ADOPT1
     15  0  T-VARSPD
     16  0  +24.0
```

```
*****************************************************************************************************************************
*  S T U D E R  *      L O C A T I O N    P I N    L I S T      *   83/02/25 * 08:28      *   P A G E     21    *
*****************************************************************************************************************************
TAPE TRANSPORT & AUDIO CIRCUITS * STUDER A810 *              1.810.090.00            81/01/29

GR: 39   1.820.732.00
VU-METER PANEL, CH01
*****************************************

EL: 01  CALIBRATION BOARD
-----------------------------------------
TYPE PT  LV SIG.NAME COLOR F   X     Y
---- --- -- -------- ----- - ----- -----
U    01  0  +15.0    2
U    02  0  + 5.6    3
U    03  0  + 0.0    0
U    04  0  -15.0    6
U    05  0  INPDI-01 0
U    06  0  INPDI-01 1
U    07  0  INPAD-01 6
U    08  0  INPAU-01 2
U    09  0  LOUFA-01 0
U    10  0  LOUFB-01 6
U    11  0  + 0.0    S
U    12  0  + 0.0    S
U    13  0  + 0.0    0
U    14  0  TAPAD-01 6
U    15  0  TAPMS-01 0
U    16  0  TAPMS-01 1
U    17  0  + 0.0    S
     18  0  GND
U    19  0  + 0.0    0
U    20  0  TAPAU-01 2

EL: 02  CALIBRATION BOARD             J01
-----------------------------------------
TYPE PT  LV SIG.NAME COLOR F   X     Y
---- --- -- -------- ----- - ----- -----
     01  0  +15.0
     02  0  + 5.6
     03  0  + 0.0
     04  0  -15.0
     05  0  + 0.0
     06  0  LOUFB-01
     07  0  LOUFA-01

EL: 03  POTENTIOMETER RECORD-LEVEL
-----------------------------------------
TYPE PT  LV SIG.NAME COLOR F   X     Y
---- --- -- -------- ----- - ----- -----
L    01  0  INPDI-01 1
L    02  0  INPAU-01 2
L    03  0  + 0.0    0

EL: 04  POTENTIOMETER REPRODUCE-LEVEL
-----------------------------------------
TYPE PT  LV SIG.NAME COLOR F   X     Y
---- --- -- -------- ----- - ----- -----
L    01  0  TAPMS-01 1
L    02  0  TAPAU-01 2
L    03  0  + 0.0    0

GR: 39   (CONTINUATION)
VU-METER PANEL, CH01
*****************************************

EL: 11  CHANNEL CONTROL BOARD
-----------------------------------------
TYPE PT  LV SIG.NAME COLOR F   X     Y
---- --- -- -------- ----- - ----- -----
L    01  0  +15.0    2
L    02  0  + 5.6    3
L    03  0  + 0.0    0
L    04  0  -15.0    6

EL: 12  FROM GR 25, EL 03
-----------------------------------------
TYPE PT  LV SIG.NAME COLOR F   X     Y
---- --- -- -------- ----- - ----- -----
     01  0  + 0.0
     02  0  + 0.0
     03  0  + 5.6
     04  0  + 5.6
     05  0  +15.0
     06  0  -15.0
     07  0  T-SADA
     08  0  T-SADB
     09  0  T-SADC
     10  0  T-READSL
     11  0  T-WRTSL
     12  0  T-DT-CH1
     13  0
     14  0
     15  0
     16  0  +24.0

EL: 21  VU-METER AMPLIFIER BOARD
-----------------------------------------
TYPE PT  LV SIG.NAME COLOR F   X     Y
---- --- -- -------- ----- - ----- -----
L    01  0  VU-A-01  2
L    02  0  VU-B-01  0

GR: 40   1.820.732.00
VU-METER PANEL, CH02
*****************************************

EL: 01  CALIBRATION BOARD
-----------------------------------------
TYPE PT  LV SIG.NAME COLOR F   X     Y
---- --- -- -------- ----- - ----- -----
U    01  0  +15.0    2
U    02  0  + 5.6    3
U    03  0  + 0.0    0
U    04  0  -15.0    6
U    05  0  INPDI-02 0
U    06  0  INPDI-02 1
U    07  0  INPAD-02 6
U    08  0  INPAU-02 2
U    09  0  LOUFA-02 0
U    10  0  LOUFB-02 6
U    11  0  + 0.0    S
U    12  0  + 0.0    S
U    13  0  + 0.0    0
U    14  0  TAPAD-02 6
U    15  0  TAPMS-02 0
U    16  0  TAPMS-02 1
U    17  0  + 0.0    S
     18  0  GND
U    19  0  + 0.0    0
U    20  0  TAPAU-02 2

EL: 02  CALIBRATION BOARD             J01
-----------------------------------------
TYPE PT  LV SIG.NAME COLOR F   X     Y
---- --- -- -------- ----- - ----- -----
     01  0  +15.0
     02  0  + 5.6
     03  0  + 0.0
     04  0  -15.0
     05  0  + 0.0
     06  0  LOUFB-02
     07  0  LOUFA-02

EL: 03  POTENTIOMETER RECORD-LEVEL
-----------------------------------------
TYPE PT  LV SIG.NAME COLOR F   X     Y
---- --- -- -------- ----- - ----- -----
L    01  0  INPDI-02 1
L    02  0  INPAU-02 2
L    03  0  + 0.0    0

EL: 04  POTENTIOMETER REPRODUCE-LEVEL
-----------------------------------------
TYPE PT  LV SIG.NAME COLOR F   X     Y
---- --- -- -------- ----- - ----- -----
L    01  0  TAPMS-02 1
L    02  0  TAPAU-02 2
L    03  0  + 0.0    0
```

```
*****************************************************************************************************************
*  S T U D E R  *      L O C A T I O N    P I N    L I S T      *   83/02/25 * 08:28     *  P A G E    22   *
*****************************************************************************************************************
TAPE TRANSPORT & AUDIO CIRCUITS * STUDER A810 *              1.810.090.00            81/01/29
```

GR: 40 (CONTINUATION)
VU-METER PANEL, CH02

EL: 11 CHANNEL CONTROL BOARD

TYPE	PT	LV	SIG.NAME	COLOR	F	X	Y
L	01	0	+15.0	2			
L	02	0	+ 5.6	3			
L	03	0	+ 0.0	0			
L	04	0	-15.0	6			

EL: 12 FROM GR 25, EL 04

TYPE	PT	LV	SIG.NAME	COLOR	F	X	Y
	01	0	+ 0.0				
	02	0	+ 0.0				
	03	0	+ 5.6				
	04	0	+ 5.6				
	05	0	+15.0				
	06	0	-15.0				
	07	0	T-SADA				
	08	0	T-SADB				
	09	0	T-SADC				
	10	0	T-READSL				
	11	0	T-WRTSL				
	12	0	T-DT-CH2				
	13	0					
	14	0					
	15	0					
	16	0	+24.0				

EL: 21 VU-METER AMPLIFIER BOARD

TYPE	PT	LV	SIG.NAME	COLOR	F	X	Y
L	01	0	VU-A-02	2			
L	02	0	VU-B-02	0			

GR: 41 1.810.722.81
MONITOR AMPLIFIER

EL: 01 FROM GR 20, EL 28 WIRE FIELD

TYPE	PT	LV	SIG.NAME	COLOR	F	X	Y
	01	0					
U	02	0	+15.0	2			
U	03	0	-15.0	6			
U	04	0	+ 0.0	S			
U	05	0	MONITAMP	9			

GR: 42 1.810.330.00
VARISPEED PANEL

EL: 01 FEED CONNECTOR FROM GR 25, EL 07

TYPE	PT	LV	SIG.NAME	COLOR	F	X	Y
	01	0	+ 0.0				
	02	0	+ 0.0				
	03	0	+ 5.6				
	04	0	+ 5.6				
	05	0	+15.0				
	06	0	-15.0				
	07	0	T-SADA				
	08	0	T-SADB				
	09	0	T-SADC				
	10	0	T-READSL				
	11	0	T-WRTSL				
	12	0	T-DT-MP				
	13	0	T-REFEXT				
	14	0	T-ADOPT1				
	15	0	T-VARSPD				
	16	0	+24.0				

EL: 02 WIRE FIELD

TYPE	PT	LV	SIG.NAME	COLOR	F	X	Y
	01	0	+ 0.0	0			
	02	0	AN-POT	1			

EL: 03 POTENTIOMETER

TYPE	PT	LV	SIG.NAME	COLOR	F	X	Y
	01	0	+ 0.0	0			
	02	0	AN-POT	1			

```
*****************************************************************************************************************
*  S T U D E R  *      L O C A T I O N    P I N    L I S T      *   83/02/25 * 08:28     *  P A G E    23   *
*****************************************************************************************************************
TAPE TRANSPORT & AUDIO CIRCUITS * STUDER A810 *              1.810.090.00            81/01/29
```

GR: 43 1.810.753.00
PERIPHERY CONTROLLER

EL: 01 CONN. BASIS BOARD (EL 04) P01

TYPE	PT	LV	SIG.NAME	COLOR	F	X	Y
	01	0	T-SADA				
	02	0	T-SADB				
	03	0	T-SADC				
	04	0	T-READSL				
	05	0	T-WRTSL				
	06	0	T-DT-CH1				
	07	0	T-DT-CH2				
	08	0	T-DT-CH3				
	09	0	T-DT-MP				
	10	0	T-DT-RP1				
	11	0	T-DT-RP2				
	12	0	T-DT-SJM				
	13	0	T-DT-RES				
	14	0					
	15	0					
	16	0					
	17	0					
	18	0	+15.0				
	19	0	KEY				
	20	0	+ 5.6				
	21	0	+ 0.0				
	22	0	-15.0				
	23	0					
	24	0					
	25	0	T-ACSTR				
	26	0	T-RESET				
	27	0	T-RW				
	28	0	T-END				
	29	0	T-ADRZ				
	30	0	T-ADRY				
	31	0	T-ADRX				
	32	0	T-DATA7				
	33	0	T-DATA6				
	34	0	T-DATA5				
	35	0	T-DATA4				
	36	0	T-DATA3				
	37	0	T-DATA2				
	38	0	T-DATA1				
	39	0	T-DATA0				

EL: 02 PERIPHERY CONTROLLER BOARD P02

TYPE	PT	LV	SIG.NAME	COLOR	F	X	Y
	01	0	S-EHEAD1				
	02	0	S-EHEAD2				
	03	0	S-PLCNTR				
	04	0	RESERVE				
	05	0	S-LINELA				
	06	0	S-LINELB				
	07	0	S-NABCCI				

./.

GR: 43 (CONTINUATION)
PERIPHERY CONTROLLER

EL: 02 (CONTINUATION)

TYPE	PT	LV	SIG.NAME	COLOR	F	X	Y
	08	0	S-AKBENA				
	09	0	TS-CH1				
	10	0	TS-CH2				
	11	0	TS-UP				
	12	0	TS-DWN				
	13	0	TS-STO				
	14	0	TSRP-LVL				
	15	0	TSRP-TRB				
	16	0	TSRP-BAS				
	17	0	TSRC-LVL				
	18	0	TSRC-TRB				
	19	0	TSRC-BIA				
	20	0	BRP-LVL				
	21	0	BRP-TRB				
	22	0	BRP-BAS				
	23	0	BRC-LVL				
	24	0	BRC-TRB				
	25	0	BRC-BIA				
	26	0	B-LED0				
	27	0	B-LED1				
	28	0	B-LED2				
	29	0	B-LED3				
	30	0	B-STO				
	31	0	B-CH1				
	32	0	B-CH2				
	33	0					
	34	0					
	35	0					
	36	0					
	37	0					
	38	0					
	39	0	+ 5.0				
	40	0	+ 0.0				

EL: 03 KEY BOARD

TYPE	PT	LV	SIG.NAME	COLOR	F	X	Y
	01	0	S-EHEAD1				
	02	0	S-EHEAD2				
	03	0	S-PLCNTR				
	04	0	RESERVE				
	05	0	S-LINELA				
	06	0	S-LINELB				
	07	0	S-NABCCI				
	08	0	S-AKBENA				
	09	0	TS-CH1				
	10	0	TS-CH2				
	11	0	TS-UP				
	12	0	TS-DWN				
	13	0	TS-STO				

./.

GR: 43 (CONTINUATION)
PERIPHERY CONTROLLER

EL: 03 (CONTINUATION)

TYPE	PT	LV	SIG.NAME	COLOR	F	X	Y
	14	0	TSRP-LVL				
	15	0	TSRP-TRB				
	16	0	TSRP-BAS				
	17	0	TSRC-LVL				
	18	0	TSRC-TRB				
	19	0	TSRC-BIA				
	20	0	BRP-LVL				
	21	0	BRP-TRB				
	22	0	BRP-BAS				
	23	0	BRC-LVL				
	24	0	BRC-TRB				
	25	0	BRC-BIA				
	26	0	B-LED0				
	27	0	B-LED1				
	28	0	B-LED2				
	29	0	B-LED3				
	30	0	B-STO				
	31	0	B-CH1				
	32	0	B-CH2				
	33	0					
	34	0					
	35	0					
	36	0					
	37	0					
	38	0					
	39	0	+ 5.0				
	40	0	+ 0.0				

GR: 44
TIME CODE CONTROL UNIT

EL: 01 FROM GR 25, EL 05

TYPE	PT	LV	SIG.NAME	COLOR	F	X	Y
	01	0	+ 0.0				
	02	0	+ 0.0				
	03	0	+ 5.6				
	04	0	+ 5.6				
	05	0	+15.0				
	06	0	-15.0				
	07	0	T-SADA				
	08	0	T-SADB				
	09	0	T-SADC				
	10	0	T-READSL				
	11	0	T-WRTSL				
	12	0	T-DT-CH3				
	13	0					
	14	0					
	15	0					
	16	0	+24.0				

GR: 45 1.810.763.00
NOISE REDUCTION SYSTEM CONTROL BOARD

EL: 01 CONN. NOISE REDUCTION SYSTEM J01

TYPE	PT	LV	SIG.NAME	COLOR	F	X	Y
	01	0	B-BDY-01				
	02	0	B-BDY-02				
	03	0					
	04	0	KEY				
	05	0					
	06	0					
	07	0					
	08	0					
	09	0					
	10	0					
	11	0	B-TLC-01				
	12	0	KEY				
	13	0	B-TLC-02				
	14	0	+24.0				
	15	0	+ 0.0				

EL: 02 FROM GR 25, EL 01 J02

TYPE	PT	LV	SIG.NAME	COLOR	F	X	Y
	01	0	+ 0.0				
	02	0	+ 0.0				
	03	0	+ 5.6				
	04	0	+ 5.6				
	05	0	+15.0				
	06	0	-15.0				
	07	0	T-SADA				
	08	0	T-SADB				
	09	0	T-SADC				
	10	0	T-READSL				
	11	0	T-WRTSL				
	12	0	T-DT-CH1				
	13	0	T-DT-CH2				
	14	0	T-DT-CH3				
	15	0	T-DT-MP				
	16	0					
	17	0					
	18	0					
	19	0					
	20	0	+ 0.0				
	21	0	T-VARSPD				
	22	0	+ 0.0				
	23	0	T-REFEXT				
	24	0	+24.0				
	25	0	+ 0.0				
	26	0	+ 0.0				

GR: 90 1.810.720.00
DISTRIBUTION BOARD

EL: 01 FROM GR 33, EL 01

TYPE	PT	LV	SIG.NAME	COLOR	F	X	Y
	01	0	+ 0.0				
	02	0	+ 0.0				
	03	0	+ 5.6				
	04	0	+ 5.6				
	05	0	+15.0				
	06	0	-15.0				
	07	0	T-SADA				
	08	0	T-SADB				
	09	0	T-SADC				
	10	0	T-READSL				
	11	0	T-WRTSL				
	12	0	T-DT-CH1				
	13	0	T-DT-CH2				
	14	0	T-DT-CH3				
	15	0	T-DT-MP				
	16	0					
	17	0					
	18	0					
	19	0					
	20	0	+ 0.0				
	21	0	T-VARSPD				
	22	0	+ 0.0				
	23	0	T-REFEXT				
	24	0	+24.0				
	25	0	+ 0.0				
	26	0	+ 0.0				

EL: 02 CONNECTOR NOISE REDUCTION P01

TYPE	PT	LV	SIG.NAME	COLOR	F	X	Y
	01	0	+ 0.0				
	02	0	+ 0.0				
	03	0	+ 5.6				
	04	0	+ 5.6				
	05	0	+15.0				
	06	0	-15.0				
	07	0	T-SADA				
	08	0	T-SADB				
	09	0	T-SADC				
	10	0	T-READSL				
	11	0	T-WRTSL				
	12	0	T-DT-CH1				
	13	0	T-DT-CH2				
	14	0	T-DT-CH3				
	15	0	T-DT-MP				
	16	0					
	17	0					
	18	0					
	19	0					
	20	0	+ 0.0				

./.

GR: 90 (CONTINUATION)
DISTRIBUTION BOARD

EL: 02 (CONTINUATION)

TYPE	PT	LV	SIG.NAME	COLOR	F	X	Y
	21	0	T-VARSPD				
	22	0	+ 0.0				
	23	0	T-REFEXT				
	24	0	+24.0				
	25	0	+ 0.0				
	26	0	+ 0.0				

EL: 03 RESERVE P02

TYPE	PT	LV	SIG.NAME	COLOR	F	X	Y
	01	0	+ 0.0				
	02	0	+ 0.0				
	03	0	+ 5.6				
	04	0	+ 5.6				
	05	0	+15.0				
	06	0	-15.0				
	07	0	T-SADA				
	08	0	T-SADB				
	09	0	T-SADC				
	10	0	T-READSL				
	11	0	T-WRTSL				
	12	0	T-DT-CH1				
	13	0	T-DT-CH2				
	14	0	T-DT-CH3				
	15	0	T-DT-MP				
	16	0					
	17	0					
	18	0					
	19	0					
	20	0	+ 0.0				
	21	0	T-VARSPD				
	22	0	+ 0.0				
	23	0	T-REFEXT				
	24	0	+24.0				
	25	0	+ 0.0				
	26	0	+ 0.0				

EL: 04 CONN. COMMANDS VARI SPEED P03

TYPE	PT	LV	SIG.NAME	COLOR	F	X	Y
	01	0	+ 0.0				
	02	0	+ 0.0				
	03	0	+ 5.6				
	04	0	+ 5.6				
	05	0	+15.0				
	06	0	-15.0				
	07	0	T-SADA				
	08	0	T-SADB				
	09	0	T-SADC				

./.

GR: 90 (CONTINUATION)
DISTRIBUTION BOARD

EL: 04 (CONTINUATION)

TYPE	PT	LV	SIG.NAME	COLOR	F	X	Y
	10	0	T-READSL				
	11	0	T-WRTSL				
	12	0	T-DT-MP				
	13	0	T-REFEXT				
	14	0					
	15	0	T-VARSPD				
	16	0	+24.0				

EL: 05 CONNECTOR COMMANDS CH 03 P04

TYPE	PT	LV	SIG.NAME	COLOR	F	X	Y
	01	0	+ 0.0				
	02	0	+ 0.0				
	03	0	+ 5.6				
	04	0	+ 5.6				
	05	0	+15.0				
	06	0	-15.0				
	07	0	T-SADA				
	08	0	T-SADB				
	09	0	T-SADC				
	10	0	T-READSL				
	11	0	T-WRTSL				
	12	0	T-DT-CH3				
	13	0					
	14	0					
	15	0					
	16	0	+24.0				

EL: 06 CONNECTOR COMMANDS CH 01 P05

TYPE	PT	LV	SIG.NAME	COLOR	F	X	Y
	01	0	+ 0.0				
	02	0	+ 0.0				
	03	0	+ 5.6				
	04	0	+ 5.6				
	05	0	+15.0				
	06	0	-15.0				
	07	0	T-SADA				
	08	0	T-SADB				
	09	0	T-SADC				
	10	0	T-READSL				
	11	0	T-WRTSL				
	12	0	T-DT-CH1				
	13	0					
	14	0					
	15	0					
	16	0	+24.0				

GR: 90 (CONTINUATION)
DISTRIBUTION BOARD

EL: 07 CONNECTOR COMMANDS CH 02 P06

TYPE	PT	LV	SIG.NAME	COLOR	F	X	Y
	01	0	+ 0.0				
	02	0	+ 0.0				
	03	0	+ 5.6				
	04	0	+ 5.6				
	05	0	+15.0				
	06	0	-15.0				
	07	0	T-SADA				
	08	0	T-SADB				
	09	0	T-SADC				
	10	0	T-READSL				
	11	0	T-WRTSL				
	12	0	T-DT-CH2				
	13	0					
	14	0					
	15	0					
	16	0	+24.0				

EL: 08 GROUND CONNECTION

TYPE	PT	LV	SIG.NAME	COLOR	F	X	Y
L	01	0	GND		0		

EL: 09 CONN. VU-METER CH 1, AUDIO J01

TYPE	PT	LV	SIG.NAME	COLOR	F	X	Y
N	01	0	+ 0.0		S		
N	02	0	LOUFA-01		0		
N	03	0	LOUFB-01		6		
N	04	0	+ 0.0		S		
N	05	0	INPDI-01		0		
N	06	0	INPAD-01		6		
N	07	0	+ 0.0		S		
N	08	0	TAPAD-01		6		
N	09	0	TAPMS-01		0		
	10	0	KEY				

EL: 10 CONN. VU-METER CH 2, AUDIO J02

TYPE	PT	LV	SIG.NAME	COLOR	F	X	Y
N	01	0	+ 0.0		S		
N	02	0	LOUFA-02		0		
N	03	0	LOUFB-02		6		
N	04	0	+ 0.0		S		
N	05	0	INPDI-02		0		
N	06	0	INPAD-02		6		
N	07	0	+ 0.0		S		
N	08	0	TAPAD-02		6		
N	09	0	TAPMS-02		0		

./.

```
*****************************************************************************************************************
*  S T U D E R  *      L O C A T I O N    P I N    L I S T      *   83/02/25 * 08:28     *  P A G E    26   *
*****************************************************************************************************************
TAPE TRANSPORT & AUDIO CIRCUITS * STUDER A810 *              1.810.090.00            81/01/29
```

GR: 90 -(CONTINUATION)
DISTRIBUTION BOARD

EL: 10 (CONTINUATION)

TYPE	PT	LV	SIG.NAME	COLOR	F	X	Y
	10	0	KEY				

EL: 11 CONNECTOR MONITOR AMPLIFIER P07

TYPE	PT	LV	SIG.NAME	COLOR	F	X	Y
	01	0	+ 0.0				
	02	0	+ 0.0				
	03	0	+ 5.6				
	04	0	+ 5.6				
	05	0	+15.0				
	06	0	-15.0				
	07	0	TAPMS-02				
	08	0	+ 0.0				
	09	0	INPDI-02				
	10	0	+ 0.0				
	11	0	+ 0.0				
	12	0	+ 0.0				
	13	0	+ 0.0				
	14	0	TAPMS-01				
	15	0	+ 0.0				
	16	0	INPDI-01				

GR: 91 1.810.721.81
MONITOR UNIT BOARD

EL: 01 PHONES+LS CONNECTION WIRE FIELD

TYPE	PT	LV	SIG.NAME	COLOR	F	X	Y
L	01	0		4			
L	02	0		3			
L	03	0		1			
L	04	0		8			
L	05	0		0			
L	06	0		0			

EL: 02 POTENTIOMETER CONN. WIRE FIELD

TYPE	PT	LV	SIG.NAME	COLOR	F	X	Y
L	01	0		6			
L	02	0		0			
L	03	0		S			

EL: 03 FROM GR 90, EL 11

TYPE	PT	LV	SIG.NAME	COLOR	F	X	Y
	01	0	+ 0.0				
	02	0	+ 0.0				
	03	0	+ 5.6				
	04	0	+ 5.6				
	05	0	+15.0				
	06	0	-15.0				
	07	0	TAPMS-02				
	08	0	+ 0.0				
	09	0	INPDI-02				
	10	0	+ 0.0				
	11	0	+ 0.0				
	12	0	+ 0.0				
	13	0	+ 0.0				
	14	0	TAPMS-01				
	15	0	+ 0.0				
	16	0	INPDI-01				

```
*****************************************************************************************************************
*  S T U D E R  *      L O C A T I O N    S U M M A R Y      *   83/02/25 * 08:28     *  P A G E    27   *
*****************************************************************************************************************
TAPE TRANSPORT & AUDIO CIRCUITS * STUDER A810 *              1.810.090.00            81/01/29
```

GR #	USED PINS	UNUSED PINS	TOTAL PINS	COD. KEYS	ELE-MNTS	DESCRIPTION OF GROUP	PART # OF GR
01	3	0	3	0	1	POWER INPUT	54.04.0109
02	4	0	4	0	1	POWER SWITCH	55.12.0001
03	4	0	4	0	2	MAINS FILTER	89.01.0384
04	9	0	9	0	2	MAIN FUSE/VOLTAGE SELECTOR	53.03.0130
05	28	4	32	0	4	MAINS TRANSFORMER	1.810.200.00
06	20	1	21	0	8	RECTIFIER UNIT	
07	18	0	18	0	2	STABILIZER	1.810.770.00
08	2	0	2	0	2	REAR PANEL	
09	10	0	10	0	2	CONNECTOR BOARD SPOOLING MOTOR, LEFT	1.810.726.00
10	10	0	10	0	2	CONNECTOR BOARD SPOOLING MOTOR, RIGHT	1.810.727.00
20	735	75	810	19	30	BASIS BOARD	1.810.700.00
21	48	7	55	0	2	COMMAND UNIT	1.810.300.00
22	9	0	9	0	1	SERIAL REMOTE CONTROL	
23	45	4	49	2	2	PARALLEL REMOTE CONTROL	1.810.738.00
24	44	10	54	0	6	SPOOLING MOTOR CONTROL	1.810.760.00
25	115	17	132	0	7	BUS CONNECTOR BOARD	1.810.701.00
26	28	1	29	0	6	CAPSTAN CONTROL UNIT	1.810.761.00
27	18	6	24	1	4	TAPE TENSION UNIT LEFT	1.810.730.81
28	28	4	32	2	6	TAPE TENSION UNIT RIGHT	1.810.728.81
29	2	0	2	0	1	PRESS-SOLENOID	
30	2	0	2	0	1	LIFT SOLENOID	
31	4	0	4	0	2	BRAKE CHASSIS	1.810.165.00
32	35	4	39	0	2	HEAD BLOCK ASSEMBLY	
33	21	4	25	0	1	CONNECTOR VU-METER PANEL, EXTERN	
34	20	6	26	0	2	CONNECTOR VU-METER PANEL, EXTERN (AUDIO)	
35	12	0	12	2	4	INTERFERENCE FILTER, CH01	1.820.749.00
36	12	0	12	2	4	INTERFERENCE FILTER, CH02	1.820.749.00
37	12	0	12	2	4	INTERFERENCE FILTER, CHTC	1.820.749.00
38	29	0	29	0	4	MASTER + MONITOR CONTROL UNIT	1.810.315.00
39	52	3	55	0	7	VU-METER PANEL, CH01	1.820.732.00
40	52	3	55	0	7	VU-METER PANEL, CH02	1.820.732.00
41	4	1	5	0	1	MONITOR AMPLIFIER	1.810.722.81
42	20	0	20	0	3	VARISPEED PANEL	1.810.330.00
43	100	18	118	1	3	PERIPHERY CONTROLLER	1.810.753.00
44	13	3	16	0	1	TIME CODE CONTROL UNIT	
45	28	11	39	2	2	NOISE REDUCTION SYSTEM CONTROL BOARD	1.810.763.00
90	155	22	177	2	11	DISTRIBUTION BOARD	1.810.720.00
91	16	9	25	0	3	MONITOR UNIT BOARD	1.810.721.81
TOT.	1767	213	1980	35	153	DISTRIBUTED IN 38 GROUPS	

SIG.NAME	COLOR	TYPE	GR	EL	PT	S	DESCRIPTION OF ELEMENT	
+ 0.0	0	F	07	01	01		OUTPUT (TO GR 20, EL 31/32)	P01
	4	F	07	01	05		OUTPUT (TO GR 20, EL 31/32)	P01
	0	F	07	01	07		OUTPUT (TO GR 20, EL 31/32)	P01
	4	F	07	01	08		OUTPUT (TO GR 20, EL 31/32)	P01
	4	F	07	01	09		OUTPUT (TO GR 20, EL 31/32)	P01
			20	01	21		CONNECTOR MPU UNIT	J01
			20	02	21		CONN. TAPE DECK CONTROLLER	J02
			20	02	24		CONN. TAPE DECK CONTROLLER	J02
			20	03	21		CONN. SERIAL REM. CONTROLLER	J03
			20	04	21		CONN. PERIPHERY CONTROLLER	J04
			20	05	16A		CONNECTOR BUS CONVERTOR	J05
			20	05	16B		CONNECTOR BUS CONVERTOR	J05
	S		20	06	21		CONN. CODE WRITE/READ UNIT	J06
			20	07	21		CONNECTOR CODE DELAY UNIT	J07
			20	08	03		CONNECTOR HF-DRIVER, CH 1	J08
			20	08	04		CONNECTOR HF-DRIVER, CH 1	J08
	S		20	08	11		CONNECTOR HF-DRIVER, CH 1	J08
			20	08	16		CONNECTOR HF-DRIVER, CH 1	J08
			20	08	21		CONNECTOR HF-DRIVER, CH 1	J08
			20	09	05		CONN. RECORD AMPLIFIER, CH 1	J09
	S		20	09	11		CONN. RECORD AMPLIFIER, CH 1	J09
			20	09	14		CONN. RECORD AMPLIFIER, CH 1	J09
			20	09	16		CONN. RECORD AMPLIFIER, CH 1	J09
			20	09	21		CONN. RECORD AMPLIFIER, CH 1	J09
	S		20	10	05		CONN. REPRODUCE AMPL., CH 1	J10
			20	10	08		CONN. REPRODUCE AMPL., CH 1	J10
			20	10	09		CONN. REPRODUCE AMPL., CH 1	J10
			20	10	11		CONN. REPRODUCE AMPL., CH 1	J10
			20	10	14		CONN. REPRODUCE AMPL., CH 1	J10
			20	10	18		CONN. REPRODUCE AMPL., CH 1	J10
			20	10	21		CONN. REPRODUCE AMPL., CH 1	J10
	S		20	11	02		CONN. LINE AMPLIFIER, CH 1	J11
			20	11	05		CONN. LINE AMPLIFIER, CH 1	J11
			20	11	09		CONN. LINE AMPLIFIER, CH 1	J11
	S		20	11	13		CONN. LINE AMPLIFIER, CH 1	J11
			20	11	21		CONN. LINE AMPLIFIER, CH 1	J11
			20	12	02		CONNECTOR MONO-STEREO-SWITCH	J12
			20	12	04		CONNECTOR MONO-STEREO-SWITCH	J12
			20	12	06		CONNECTOR MONO-STEREO-SWITCH	J12
			20	12	08		CONNECTOR MONO-STEREO-SWITCH	J12
			20	12	10		CONNECTOR MONO-STEREO-SWITCH	J12
			20	12	12		CONNECTOR MONO-STEREO-SWITCH	J12
			20	12	14		CONNECTOR MONO-STEREO-SWITCH	J12
			20	12	21		CONNECTOR MONO-STEREO-SWITCH	J12
			20	13	03		CONNECTOR HF-DRIVER, CH 2	J13
			20	13	04		CONNECTOR HF-DRIVER, CH 2	J13
	S		20	13	11		CONNECTOR HF-DRIVER, CH 2	J13
			20	13	16		CONNECTOR HF-DRIVER, CH 2	J13
			20	13	21		CONNECTOR HF-DRIVER, CH 2	J13
			20	14	05		CONN. RECORD AMPLIFIER, CH 2	J14
	S		20	14	11		CONN. RECORD AMPLIFIER, CH 2	J14
			20	14	14		CONN. RECORD AMPLIFIER, CH 2	J14
			20	14	16		CONN. RECORD AMPLIFIER, CH 2	J14
			20	14	21		CONN. RECORD AMPLIFIER, CH 2	J14
			20	15	05		CONN. REPRODUCE AMPL., CH 2	J15
	S		20	15	08		CONN. REPRODUCE AMPL., CH 2	J15
(CONT.)			20	15	09		CONN. REPRODUCE AMPL., CH 2	J15
			20	15	11		CONN. REPRODUCE AMPL., CH 2	J15
			20	15	14		CONN. REPRODUCE AMPL., CH 2	J15
			20	15	18		CONN. REPRODUCE AMPL., CH 2	J15
			20	15	21		CONN. REPRODUCE AMPL., CH 2	J15
	S		20	16	02		CONN. LINE AMPLIFIER, CH 2	J16
			20	16	05		CONN. LINE AMPLIFIER, CH 2	J16
			20	16	09		CONN. LINE AMPLIFIER, CH 2	J16
	S		20	16	13		CONN. LINE AMPLIFIER, CH 2	J16
			20	16	21		CONN. LINE AMPLIFIER, CH 2	J16
			20	20	01		CONN. SPOOLING MOTOR CONTR.	P01
			20	20	02		CONN. SPOOLING MOTOR CONTR.	P01
			20	21	01		CONN. CAPSTAN CONTROL UNIT	P02
			20	21	02		CONN. CAPSTAN CONTROL UNIT	P02
			20	23	37		CONNECTOR COMMAND UNIT	P04
			20	23	39		CONNECTOR COMMAND UNIT	P04
			20	25	03		CONN. TO BUS CONNECTOR BOARD	J18
			20	25	04		CONN. TO BUS CONNECTOR BOARD	J18
			20	25	09		CONN. TO BUS CONNECTOR BOARD	J18
			20	25	10		CONN. TO BUS CONNECTOR BOARD	J18
			20	25	13		CONN. TO BUS CONNECTOR BOARD	J18
			20	25	14		CONN. TO BUS CONNECTOR BOARD	J18
			20	25	17		CONN. TO BUS CONNECTOR BOARD	J18
			20	25	18		CONN. TO BUS CONNECTOR BOARD	J18
	S	N	20	26	01		CONN. TO VU-METER PANEL, CH1	J19
	S	N	20	26	04		CONN. TO VU-METER PANEL, CH1	J19
	S	N	20	26	07		CONN. TO VU-METER PANEL, CH1	J19
	S	N	20	27	01		CONN. TO VU-METER PANEL, CH2	J20
	S	N	20	27	04		CONN. TO VU-METER PANEL, CH2	J20
	S	N	20	27	07		CONN. TO VU-METER PANEL, CH2	J20
	S	N	20	28	03		CONN. TO MONITOR AMPLIFIER	J21
	0	N	20	28	06		CONN. TO MONITOR AMPLIFIER	J21
	S	N	20	29	02		CONNECTOR TO MASTER PANEL	J22
	S	N	20	29	04		CONNECTOR TO MASTER PANEL	J22
	4	L	20	31	08		WIRE FIELD (POWER SUP. +SOLEN.)	
	4	L	20	31	10		WIRE FIELD (POWER SUP. +SOLEN.)	
	4	L	20	31	11		WIRE FIELD (POWER SUP. +SOLEN.)	
	0	L	20	32	03		WIRE FIELD (POWER SUPPLY)	
	0	L	20	32	04		WIRE FIELD (POWER SUPPLY)	
	0	U	20	33	01		WIRE FIELD (HEAD BLOCK ASSEMBLY)	
			21	01	37		CONNECTOR TO BASIS BOARD, EL 23	
			21	01	39		CONNECTOR TO BASIS BOARD, EL 23	
			21	02	14		CONNECTOR TO DISPLAY BOARD	
		B	23	01	01		CONN. PARALLEL REMOTE CONTR.	J01
		B	23	01	14		CONN. PARALLEL REMOTE CONTR.	J01
			23	02	01		FROM GR 25, EL 02	
			23	02	02		FROM GR 25, EL 02	
			23	02	20		FROM GR 25, EL 02	
			23	02	22		FROM GR 25, EL 02	
			23	02	25		FROM GR 25, EL 02	
			23	02	26		FROM GR 25, EL 02	
			24	01	01		FROM GR 20, EL 20	
			24	01	02		FROM GR 20, EL 20	
			24	02	01		CONN. TAPE TENS. UNIT, LEFT	J02
			24	02	02		CONN. TAPE TENS. UNIT, LEFT	J02
			24	03	01		CONN. TAPE TENS. UNIT, RIGHT	J03

./.

SIG.NAME	COLOR	TYPE	GR	EL	PT	S	DESCRIPTION OF ELEMENT	
(CONT.)			24	03	02		CONN. TAPE TENS. UNIT, RIGHT	J03
			25	01	01		CONN. VU-METER PANEL EXT.	P01
			25	01	02		CONN. VU-METER PANEL EXT.	P01
			25	01	20		CONN. VU-METER PANEL EXT.	P01
			25	01	22		CONN. VU-METER PANEL EXT.	P01
			25	01	25		CONN. VU-METER PANEL EXT.	P01
			25	01	26		CONN. VU-METER PANEL EXT.	P01
			25	02	01		CONN. REMOTE CONTROL	P02
			25	02	02		CONN. REMOTE CONTROL	P02
			25	02	20		CONN. REMOTE CONTROL	P02
			25	02	22		CONN. REMOTE CONTROL	P02
			25	02	25		CONN. REMOTE CONTROL	P02
			25	02	26		CONN. REMOTE CONTROL	P02
			25	03	01		CONNECTOR COMMANDS CH1	P03
			25	03	02		CONNECTOR COMMANDS CH1	P03
			25	04	01		CONNECTOR COMMANDS CH2	P04
			25	04	02		CONNECTOR COMMANDS CH2	P04
			25	05	01		CONNECTOR COMMANDS CH3	P05
			25	05	02		CONNECTOR COMMANDS CH3	P05
			25	06	01		CONN. COMMANDS MASTER PANEL	P06
			25	06	02		CONN. COMMANDS MASTER PANEL	P06
			25	07	01		CONN. COMM. VARI SPEED PANEL	P07
			25	07	02		CONN. COMM. VARI SPEED PANEL	P07
			26	01	01		FROM GR 20, EL 21	
			26	01	02		FROM GR 20, EL 21	
			27	01	01		FROM GR 24, EL 02	J01
			27	01	02		FROM GR 24, EL 02	J01
			28	01	01		FROM GR 24, EL 03	J01
			28	01	02		FROM GR 24, EL 03	J01
	0	N	28	04	01		CONN. MOVE SENSOR	J03
	0	U	28	05	01		MOVE SENSOR WIRE FIELD	
	0	B	32	01	07		CONN. HEAD BLOCK ASSEMBLY	P01
	S	L	32	02	04		REPRODUCE PREAMPLIFIER	
	S	L	32	02	05		REPRODUCE PREAMPLIFIER	
			33	01	01		FROM GR 25, EL 01	J01
			33	01	13		FROM GR 25, EL 01	J01
			33	01	14		FROM GR 25, EL 01	J01
			33	01	23		FROM GR 25, EL 01	J01
			33	01	24		FROM GR 25, EL 01	J01
	S	A	34	01	02		FROM GR 20, EL 26+27	P01
	S	A	34	01	09		FROM GR 20, EL 26+27	P01
	S	A	34	01	15		FROM GR 20, EL 26+27	P01
	S	A	34	01	17		FROM GR 20, EL 26+27	P01
	S	A	34	01	22		FROM GR 20, EL 26+27	P01
	S	A	34	01	24		FROM GR 20, EL 26+27	P01
	S	D	35	03	03		CONNECTOR LINE FILTER, INP.	P01
	S	D	35	04	03		CONNECTOR LINE FILTER, OUTP.	P02
	S	D	36	03	03		CONNECTOR LINE FILTER, INP.	P01
	S	D	36	04	03		CONNECTOR LINE FILTER, OUTP.	P02
	S	D	37	03	03		CONNECTOR LINE FILTER, INP.	P01
	S	D	37	04	03		CONNECTOR LINE FILTER, OUTP.	P02
	S	L	38	01	03A		CONNECTOR, HEAD PHONES	
	S	L	38	02	04A		LEVEL POTENTIOMETER	
	4	U	38	03	04B		MASTER SWITCHING BOARD	
			38	04	01		MASTER CONTROL BOARD	
			38	04	02		MASTER CONTROL BOARD	
(CONT.)	0	U	39	01	03		CALIBRATION BOARD	
	S	U	39	01	11		CALIBRATION BOARD	
	S	U	39	01	12		CALIBRATION BOARD	
	0	U	39	01	13		CALIBRATION BOARD	
	S	U	39	01	17		CALIBRATION BOARD	
	0	U	39	01	19		CALIBRATION BOARD	
			39	02	03		CALIBRATION BOARD	J01
			39	02	05		CALIBRATION BOARD	J01
	0	L	39	03	03		POTENTIOMETER RECORD-LEVEL	
	0	L	39	04	03		POTENTIOMETER REPRODUCE-LEVEL	
	0	L	39	11	03		CHANNEL CONTROL BOARD	
			39	12	01		FROM GR 25, EL 03	
			39	12	02		FROM GR 25, EL 03	
	0	U	40	01	03		CALIBRATION BOARD	
	S	U	40	01	11		CALIBRATION BOARD	
	S	U	40	01	12		CALIBRATION BOARD	
	0	U	40	01	13		CALIBRATION BOARD	
	S	U	40	01	17		CALIBRATION BOARD	
	0	U	40	01	19		CALIBRATION BOARD	
			40	02	03		CALIBRATION BOARD	J01
			40	02	05		CALIBRATION BOARD	J01
	0	L	40	03	03		POTENTIOMETER RECORD-LEVEL	
	0	L	40	04	03		POTENTIOMETER REPRODUCE-LEVEL	
	0	L	40	11	03		CHANNEL CONTROL BOARD	
			40	12	01		FROM GR 25, EL 04	
			40	12	02		FROM GR 25, EL 04	
	S	J	41	01	04		FROM GR 20, EL 28 WIRE FIELD	
			42	01	01		FEED CONNECTOR FROM GR 25, EL 07	
			42	01	02		FEED CONNECTOR FROM GR 25, EL 07	
	0		42	02	01		WIRE FIELD	
	0		42	03	01		POTENTIOMETER	
			43	01	21		CONN. BASIS BOARD (EL 04)	P01
			43	02	40		PERIPHERY CONTROLLER BOARD	P02
			43	03	40		KEY BOARD	
			44	01	01		FROM GR 25, EL 05	
			44	01	02		FROM GR 25, EL 05	
			45	01	15		CONN. NOISE REDUCTION SYSTEM	J01
			45	02	01		FROM GR 25, EL 01	J02
			45	02	02		FROM GR 25, EL 01	J02
			45	02	20		FROM GR 25, EL 01	J02
			45	02	22		FROM GR 25, EL 01	J02
			45	02	25		FROM GR 25, EL 01	J02
			45	02	26		FROM GR 25, EL 01	J02
			90	01	01		FROM GR 33, EL 01	
			90	01	02		FROM GR 33, EL 01	
			90	01	20		FROM GR 33, EL 01	
			90	01	22		FROM GR 33, EL 01	
			90	01	25		FROM GR 33, EL 01	
			90	01	26		FROM GR 33, EL 01	
			90	02	01		CONNECTOR NOISE REDUCTION	P01
			90	02	02		CONNECTOR NOISE REDUCTION	P01
			90	02	20		CONNECTOR NOISE REDUCTION	P01
			90	02	22		CONNECTOR NOISE REDUCTION	P01
			90	02	25		CONNECTOR NOISE REDUCTION	P01
			90	02	26		CONNECTOR NOISE REDUCTION	P01
			90	03	01		RESERVE	P02

./.

SIG.NAME	COLOR	TYPE	GR	EL	PT	S	DESCRIPTION OF ELEMENT	
(CONT.)			90	03	02		RESERVE	P02
			90	03	20		RESERVE	P02
			90	03	22		RESERVE	P02
			90	03	25		RESERVE	P02
			90	03	26		RESERVE	P02
			90	04	01		CONN. COMMANDS VARI SPEED	P03
			90	04	02		CONN. COMMANDS VARI SPEED	P03
			90	05	01		CONNECTOR COMMANDS CH 03	P04
			90	05	02		CONNECTOR COMMANDS CH 03	P04
			90	06	01		CONNECTOR COMMANDS CH 01	P05
			90	06	02		CONNECTOR COMMANDS CH 01	P05
			90	07	01		CONNECTOR COMMANDS CH 02	P06
			90	07	02		CONNECTOR COMMANDS CH 02	P06
	S	N	90	09	01		CONN. VU-METER CH 1, AUDIO	J01
	S	N	90	09	04		CONN. VU-METER CH 1, AUDIO	J01
	S	N	90	09	07		CONN. VU-METER CH 1, AUDIO	J01
	S	N	90	10	01		CONN. VU-METER CH 2, AUDIO	J02
	S	N	90	10	04		CONN. VU-METER CH 2, AUDIO	J02
	S	N	90	10	07		CONN. VU-METER CH 2, AUDIO	J02
			90	11	01		CONNECTOR MONITOR AMPLIFIER	P07
			90	11	02		CONNECTOR MONITOR AMPLIFIER	P07
			90	11	08		CONNECTOR MONITOR AMPLIFIER	P07
			90	11	10		CONNECTOR MONITOR AMPLIFIER	P07
			90	11	11		CONNECTOR MONITOR AMPLIFIER	P07
			90	11	12		CONNECTOR MONITOR AMPLIFIER	P07
			90	11	13		CONNECTOR MONITOR AMPLIFIER	P07
			90	11	15		CONNECTOR MONITOR AMPLIFIER	P07
			91	03	01		FROM GR 90, EL 11	
			91	03	02		FROM GR 90, EL 11	
			91	03	08		FROM GR 90, EL 11	
			91	03	10		FROM GR 90, EL 11	
			91	03	11		FROM GR 90, EL 11	
			91	03	12		FROM GR 90, EL 11	
			91	03	13		FROM GR 90, EL 11	
			91	03	15		FROM GR 90, EL 11	
+ 5.0			43	02	39		PERIPHERY CONTROLLER BOARD	P02
			43	03	39		KEY BOARD	
+ 5.6	3	F	07	01	03		OUTPUT (TO GR 20, EL 31/32)	P01
	3	F	07	01	06		OUTPUT (TO GR 20, EL 31/32)	P01
			20	01	20		CONNECTOR MPU UNIT	J01
			20	02	20		CONN. TAPE DECK CONTROLLER	J02
			20	03	20		CONN. SERIAL REM. CONTROLLER	J03
			20	04	20		CONN. PERIPHERY CONTROLLER	J04
			20	05	18A		CONNECTOR BUS CONVERTOR	J05
			20	05	18B		CONNECTOR BUS CONVERTOR	J05
			20	06	24		CONN. CODE WRITE/READ UNIT	J06
			20	07	24		CONNECTOR CODE DELAY UNIT	J07
			20	08	24		CONNECTOR HF-DRIVER, CH 1	J08
			20	09	24		CONN. RECORD AMPLIFIER, CH 1	J09
			20	10	24		CONN. REPRODUCE AMPL., CH 1	J10
			20	11	24		CONN. LINE AMPLIFIER, CH 1	J11
			20	12	24		CONNECTOR MONO-STEREO-SWITCH	J12
			20	13	24		CONNECTOR HF-DRIVER, CH 2	J13
			20	14	24		CONN. RECORD AMPLIFIER, CH 2	J14

./.

SIG.NAME	COLOR	TYPE	GR	EL	PT	S	DESCRIPTION OF ELEMENT	
(CONT.)			20	15	24		CONN. REPRODUCE AMPL., CH 2	J15
			20	16	24		CONN. LINE AMPLIFIER, CH 2	J16
			20	20	03		CONN. SPOOLING MOTOR CONTR.	P01
			20	20	04		CONN. SPOOLING MOTOR CONTR.	P01
			20	21	03		CONN. CAPSTAN CONTROL UNIT	P02
			20	21	04		CONN. CAPSTAN CONTROL UNIT	P02
			20	23	38		CONNECTOR COMMAND UNIT	P04
			20	23	40		CONNECTOR COMMAND UNIT	P04
			20	25	11		CONN. TO BUS CONNECTOR BOARD	J18
			20	25	12		CONN. TO BUS CONNECTOR BOARD	J18
	3	L	20	32	01		WIRE FIELD (POWER SUPPLY)	
	3	L	20	32	02		WIRE FIELD (POWER SUPPLY)	
	3	U	20	33	04		WIRE FIELD (HEAD BLOCK ASSEMBLY)	
			21	01	38		CONNECTOR TO BASIS BOARD, EL 23	
			21	02	15		CONNECTOR TO DISPLAY BOARD	
			23	02	03		FROM GR 25, EL 02	
			23	02	04		FROM GR 25, EL 02	
			24	01	03		FROM GR 20, EL 20	
			24	01	04		FROM GR 20, EL 20	
			24	02	03		CONN. TAPE TENS. UNIT, LEFT	J02
			24	02	04		CONN. TAPE TENS. UNIT, LEFT	J02
			24	03	03		CONN. TAPE TENS. UNIT, RIGHT	J03
			24	03	04		CONN. TAPE TENS. UNIT, RIGHT	J03
			25	01	03		CONN. VU-METER PANEL EXT.	P01
			25	01	04		CONN. VU-METER PANEL EXT.	P01
			25	02	03		CONN. REMOTE CONTROL	P02
			25	02	04		CONN. REMOTE CONTROL	P02
			25	03	03		CONNECTOR COMMANDS CH1	P03
			25	03	04		CONNECTOR COMMANDS CH1	P03
			25	04	03		CONNECTOR COMMANDS CH2	P04
			25	04	04		CONNECTOR COMMANDS CH2	P04
			25	05	03		CONNECTOR COMMANDS CH3	P05
			25	05	04		CONNECTOR COMMANDS CH3	P05
			25	06	03		CONN. COMMANDS MASTER PANEL	P06
			25	06	04		CONN. COMMANDS MASTER PANEL	P06
			25	07	03		CONN. COMM. VARI SPEED PANEL	P07
			25	07	04		CONN. COMM. VARI SPEED PANEL	P07
			26	01	03		FROM GR 20, EL 21	
			26	01	04		FROM GR 20, EL 21	
			27	01	03		FROM GR 24, EL 02	J01
			27	01	04		FROM GR 24, EL 02	J01
	2	N	27	02	02		CONN. TAPE END SW LEFT	J02
	2	U	27	04	02		TAPE END SW. LEFT WIRE FIELD	
			28	01	03		FROM GR 24, EL 03	J01
			28	01	04		FROM GR 24, EL 03	J01
	2	N	28	02	02		CONN. TAPE END SW RIGHT	J02
	2	N	28	04	02		CONN. MOVE SENSOR	J03
	2	U	28	05	02		MOVE SENSOR WIRE FIELD	
	2	U	28	06	02		TAPE END SW. RIGHT WIRE FIELD	
	3	B	32	01	08		CONN. HEAD BLOCK ASSEMBLY	P01
			33	01	02		FROM GR 25, EL 01	J01
			33	01	15		FROM GR 25, EL 01	J01
			38	04	03		MASTER CONTROL BOARD	
			38	04	04		MASTER CONTROL BOARD	
	3	U	39	01	02		CALIBRATION BOARD	
			39	02	02		CALIBRATION BOARD	J01

./.

SIG.NAME	COLOR	TYPE	GR	EL	PT	S	DESCRIPTION OF ELEMENT	
(CONT.)	3	L	39	11	02		CHANNEL CONTROL BOARD	
			39	12	03		FROM GR 25, EL 03	
			39	12	04		FROM GR 25, EL 03	
	3	U	40	01	02		CALIBRATION BOARD	
			40	02	02		CALIBRATION BOARD	J01
	3	L	40	11	02		CHANNEL CONTROL BOARD	
			40	12	03		FROM GR 25, EL 04	
			40	12	04		FROM GR 25, EL 04	
			42	01	03		FEED CONNECTOR FROM GR 25, EL 07	
			42	01	04		FEED CONNECTOR FROM GR 25, EL 07	
			43	01	20		CONN. BASIS BOARD (EL 04)	P01
			44	01	03		FROM GR 25, EL 05	
			44	01	04		FROM GR 25, EL 05	
			45	02	03		FROM GR 25, EL 01	J02
			45	02	04		FROM GR 25, EL 01	J02
			90	01	03		FROM GR 33, EL 01	
			90	01	04		FROM GR 33, EL 01	
			90	02	03		CONNECTOR NOISE REDUCTION	P01
			90	02	04		CONNECTOR NOISE REDUCTION	P01
			90	03	03		RESERVE	P02
			90	03	04		RESERVE	P02
			90	04	03		CONN. COMMANDS VARI SPEED	P03
			90	04	04		CONN. COMMANDS VARI SPEED	P03
			90	05	03		CONNECTOR COMMANDS CH 03	P04
			90	05	04		CONNECTOR COMMANDS CH 03	P04
			90	06	03		CONNECTOR COMMANDS CH 01	P05
			90	06	04		CONNECTOR COMMANDS CH 01	P05
			90	07	03		CONNECTOR COMMANDS CH 02	P06
			90	07	04		CONNECTOR COMMANDS CH 02	P06
			90	11	03		CONNECTOR MONITOR AMPLIFIER	P07
			90	11	04		CONNECTOR MONITOR AMPLIFIER	P07
			91	03	03		FROM GR 90, EL 11	
			91	03	04		FROM GR 90, EL 11	
+ 5V-LED			21	01	40		CONNECTOR TO BASIS BOARD, EL 23	
+15.0	2	F	07	01	04		OUTPUT (TO GR 20, EL 31/32)	P01
			20	01	18		CONNECTOR MPU UNIT	J01
			20	02	18		CONN. TAPE DECK CONTROLLER	J02
			20	03	18		CONN. SERIAL REM. CONTROLLER	J03
			20	04	18		CONN. PERIPHERY CONTROLLER	J04
			20	05	15A		CONNECTOR BUS CONVERTOR	J05
			20	05	15B		CONNECTOR BUS CONVERTOR	J05
			20	06	22		CONN. CODE WRITE/READ UNIT	J06
			20	07	22		CONNECTOR CODE DELAY UNIT	J07
			20	08	22		CONNECTOR HF-DRIVER, CH 1	J08
			20	09	22		CONN. RECORD AMPLIFIER, CH 1	J09
			20	10	22		CONN. REPRODUCE AMPL., CH 1	J10
			20	11	22		CONN. LINE AMPLIFIER, CH 1	J11
			20	12	22		CONNECTOR MONO-STEREO-SWITCH	J12
			20	13	22		CONNECTOR HF-DRIVER, CH 2	J13
			20	14	22		CONN. RECORD AMPLIFIER, CH 2	J14
			20	15	22		CONN. REPRODUCE AMPL., CH 2	J15
			20	16	22		CONN. LINE AMPLIFIER, CH 2	J16
			20	20	05		CONN. SPOOLING MOTOR CONTR.	P01
			20	20	06		CONN. SPOOLING MOTOR CONTR.	P01

./.

SIG.NAME	COLOR	TYPE	GR	EL	PT	S	DESCRIPTION OF ELEMENT	
(CONT.)			20	21	05		CONN. CAPSTAN CONTROL UNIT	P02
			20	21	06		CONN. CAPSTAN CONTROL UNIT	P02
			20	25	05		CONN. TO BUS CONNECTOR BOARD	J18
			20	25	06		CONN. TO BUS CONNECTOR BOARD	J18
	2	N	20	28	05		CONN. TO MONITOR AMPLIFIER	J21
	2	L	20	32	05		WIRE FIELD (POWER SUPPLY)	
	2	U	20	33	02		WIRE FIELD (HEAD BLOCK ASSEMBLY)	
			23	02	05		FROM GR 25, EL 02	
			24	01	05		FROM GR 20, EL 20	
			24	01	06		FROM GR 20, EL 20	
			24	02	05		CONN. TAPE TENS. UNIT, LEFT	J02
			24	02	06		CONN. TAPE TENS. UNIT, LEFT	J02
			24	03	05		CONN. TAPE TENS. UNIT, RIGHT	J03
			24	03	06		CONN. TAPE TENS. UNIT, RIGHT	J03
			25	01	05		CONN. VU-METER PANEL EXT.	P01
			25	02	05		CONN. REMOTE CONTROL	P02
			25	03	05		CONNECTOR COMMANDS CH1	P03
			25	04	05		CONNECTOR COMMANDS CH2	P04
			25	05	05		CONNECTOR COMMANDS CH3	P05
			25	06	05		CONN. COMMANDS MASTER PANEL	P06
			25	07	05		CONN. COMM. VARI SPEED PANEL	P07
			26	01	05		FROM GR 20, EL 21	
			26	01	06		FROM GR 20, EL 21	
			27	01	05		FROM GR 24, EL 02	J01
			27	01	06		FROM GR 24, EL 02	J01
			28	01	05		FROM GR 24, EL 03	J01
			28	01	06		FROM GR 24, EL 03	J01
	2	B	32	01	03		CONN. HEAD BLOCK ASSEMBLY	P01
	2	L	32	02	01		REPRODUCE PREAMPLIFIER	
			33	01	03		FROM GR 25, EL 01	J01
			38	04	05		MASTER CONTROL BOARD	
	2	U	39	01	01		CALIBRATION BOARD	
			39	02	01		CALIBRATION BOARD	J01
	2	L	39	11	01		CHANNEL CONTROL BOARD	
			39	12	05		FROM GR 25, EL 03	
	2	U	40	01	01		CALIBRATION BOARD	
			40	02	01		CALIBRATION BOARD	J01
	2	L	40	11	01		CHANNEL CONTROL BOARD	
			40	12	05		FROM GR 25, EL 04	
	2	U	41	01	02		FROM GR 20, EL 28 WIRE FIELD	
			42	01	05		FEED CONNECTOR FROM GR 25, EL 07	
			43	01	18		CONN. BASIS BOARD (EL 04)	P01
			44	01	05		FROM GR 25, EL 05	
			45	02	05		FROM GR 25, EL 01	J02
			90	01	05		FROM GR 33, EL 01	
			90	02	05		CONNECTOR NOISE REDUCTION	P01
			90	03	05		RESERVE	P02
			90	04	05		CONN. COMMANDS VARI SPEED	P03
			90	05	05		CONNECTOR COMMANDS CH 03	P04
			90	06	05		CONNECTOR COMMANDS CH 01	P05
			90	07	05		CONNECTOR COMMANDS CH 02	P06
			90	11	05		CONNECTOR MONITOR AMPLIFIER	P07
			91	03	05		FROM GR 90, EL 11	
+24.0	7	F	07	01	02		OUTPUT (TO GR 20, EL 31/32)	P01
			20	25	19		CONN. TO BUS CONNECTOR BOARD	J18

./.

```
*****************************************************************************************************************************
*  S T U D E R   *   S I G N A L   W I R E   L I S T                *   83/02/25 * 08:28      *   P A G E    32    *
*****************************************************************************************************************************
TAPE TRANSPORT & AUDIO CIRCUITS * STUDER A810 *                1.810.090.00              81/01/29

SIG.NAME COLOR TYPE GR EL PT  S DESCRIPTION OF ELEMENT
-------- ----- ---- -- -- --- - ------------------------------
(CONT.)              20 25 20   CONN. TO BUS CONNECTOR BOARD J18
         7     U     20 31 01   WIRE FIELD (POWER SUP. +SOLEN.)
         7     U     20 31 02   WIRE FIELD (POWER SUP. +SOLEN.)
         7     U     20 31 03   WIRE FIELD (POWER SUP. +SOLEN.)
         7     U     20 31 04   WIRE FIELD (POWER SUP. +SOLEN.)
         7     U     20 31 05   WIRE FIELD (POWER SUP. +SOLEN.)
         7     U     20 31 06   WIRE FIELD (POWER SUP. +SOLEN.)
         7     L     20 31 07   WIRE FIELD (POWER SUP. +SOLEN.)
               B     23 01 25   CONN. PARALLEL REMOTE CONTR. J01
                     23 02 24   FROM GR 25, EL 02
                     25 01 24   CONN. VU-METER PANEL EXT.    P01
                     25 02 24   CONN. REMOTE CONTROL         P02
                     25 03 16   CONNECTOR COMMANDS CH1       P03
                     25 04 16   CONNECTOR COMMANDS CH2       P04
                     25 05 16   CONNECTOR COMMANDS CH3       P05
                     25 06 16   CONN. COMMANDS MASTER PANEL  P06
                     25 07 16   CONN. COMM. VARI SPEED PANEL P07
         7     X     27 03 01   EDIT SOLENOID, LEFT
         7     X     28 03 01   EDIT SOLENOID, RIGHT
         7     X     29 01 01   PRESS SOLENOID
         7     X     30 01 01   LIFT SOLENOID
         7     X     31 01 01   BRAKE SOLENOID
         7     X     31 02 01   EDIT-BRAKE SOLENOID
                     33 01 25   FROM GR 25, EL 01           J01
                     38 04 16   MASTER CONTROL BOARD
                     39 12 16   FROM GR 25, EL 03
                     40 12 16   FROM GR 25, EL 04
                     42 01 16   FEED CONNECTOR FROM GR 25, EL 07
                     44 01 16   FROM GR 25, EL 05
                     45 01 14   CONN. NOISE REDUCTION SYSTEM J01
                     45 02 24   FROM GR 25, EL 01           J02
                     90 01 24   FROM GR 33, EL 01
                     90 02 24   CONNECTOR NOISE REDUCTION    P01
                     90 03 24   RESERVE                      P02
                     90 04 16   CONN. COMMANDS VARI SPEED    P03
                     90 05 16   CONNECTOR COMMANDS CH 03     P04
                     90 06 16   CONNECTOR COMMANDS CH 01     P05
                     90 07 16   CONNECTOR COMMANDS CH 02     P06
-15.0    6     F     07 01 10   OUTPUT (TO GR 20, EL 31/32)  P01
                     20 03 22   CONN. SERIAL REM. CONTROLLER J03
                     20 04 22   CONN. PERIPHERY CONTROLLER   J04
                     20 05 17A  CONNECTOR BUS CONVERTOR      J05
                     20 05 17B  CONNECTOR BUS CONVERTOR      J05
                     20 06 23   CONN. CODE WRITE/READ UNIT   J06
                     20 07 23   CONNECTOR CODE DELAY UNIT    J07
                     20 08 23   CONNECTOR HF-DRIVER, CH 1    J08
                     20 09 23   CONN. RECORD AMPLIFIER, CH 1 J09
                     20 10 23   CONN. REPRODUCE AMPL., CH 1  J10
                     20 11 23   CONN. LINE AMPLIFIER, CH 1   J11
                     20 12 23   CONNECTOR MONO-STEREO-SWITCH J12
                     20 13 23   CONNECTOR HF-DRIVER, CH 2    J13
                     20 14 23   CONN. RECORD AMPLIFIER, CH 2 J14
                     20 15 23   CONN. REPRODUCE AMPL., CH 2  J15
                     20 16 23   CONN. LINE AMPLIFIER, CH 2   J16
                     20 20 07   CONN. SPOOLING MOTOR CONTR.  P01
                                                            ./.

SIG.NAME COLOR TYPE GR EL PT  S DESCRIPTION OF ELEMENT
-------- ----- ---- -- -- --- - ------------------------------
(CONT.)              20 21 07   CONN. CAPSTAN CONTROL UNIT   P02
                     20 21 08   CONN. CAPSTAN CONTROL UNIT   P02
                     20 25 07   CONN. TO BUS CONNECTOR BOARD J18
                     20 25 08   CONN. TO BUS CONNECTOR BOARD J18
         6     N     20 28 04   CONN. TO MONITOR AMPLIFIER   J21
         6     L     20 32 06   WIRE FIELD (POWER SUPPLY)
         6     U     20 33 03   WIRE FIELD (HEAD BLOCK ASSEMBLY)
                     23 02 06   FROM GR 25, EL 02
                     24 01 07   FROM GR 20, EL 20
                     24 02 07   CONN. TAPE TENS. UNIT, LEFT  J02
                     24 02 08   CONN. TAPE TENS. UNIT, LEFT  J02
                     24 03 07   CONN. TAPE TENS. UNIT, RIGHT J03
                     24 03 08   CONN. TAPE TENS. UNIT, RIGHT J03
                     25 01 06   CONN. VU-METER PANEL EXT.    P01
                     25 02 06   CONN. REMOTE CONTROL         P02
                     25 03 06   CONNECTOR COMMANDS CH1       P03
                     25 04 06   CONNECTOR COMMANDS CH2       P04
                     25 05 06   CONNECTOR COMMANDS CH3       P05
                     25 06 06   CONN. COMMANDS MASTER PANEL  P06
                     25 07 06   CONN. COMM. VARI SPEED PANEL P07
                     26 01 07   FROM GR 20, EL 21
                     26 01 08   FROM GR 20, EL 21
                     27 01 07   FROM GR 24, EL 02            J01
                     27 01 08   FROM GR 24, EL 02            J01
                     28 01 07   FROM GR 24, EL 03            J01
                     28 01 08   FROM GR 24, EL 03            J01
         6     B     32 01 16   CONN. HEAD BLOCK ASSEMBLY    P01
         6     L     32 02 08   REPRODUCE PREAMPLIFIER
                     33 01 16   FROM GR 25, EL 01            J01
                     38 04 06   MASTER CONTROL BOARD
         6     U     39 01 04   CALIBRATION BOARD
                     39 02 04   CALIBRATION BOARD            J01
         6     L     39 11 04   CHANNEL CONTROL BOARD
                     39 12 06   FROM GR 25, EL 03
         6     U     40 01 04   CALIBRATION BOARD
                     40 02 04   CALIBRATION BOARD            J01
         6     L     40 11 04   CHANNEL CONTROL BOARD
                     40 12 06   FROM GR 25, EL 04
         6     U     41 01 03   FROM GR 20, EL 28     WIRE FIELD
                     42 01 06   FEED CONNECTOR FROM GR 25, EL 07
                     43 01 22   CONN. BASIS BOARD (EL 04)    P01
                     44 01 06   FROM GR 25, EL 05
                     45 02 06   FROM GR 25, EL 01            J02
                     90 01 06   FROM GR 33, EL 01
                     90 02 06   CONNECTOR NOISE REDUCTION    P01
                     90 03 06   RESERVE                      P02
                     90 04 06   CONN. COMMANDS VARI SPEED    P03
                     90 05 06   CONNECTOR COMMANDS CH 03     P04
                     90 06 06   CONNECTOR COMMANDS CH 01     P05
                     90 07 06   CONNECTOR COMMANDS CH 02     P06
                     90 11 06   CONNECTOR MONITOR AMPLIFIER  P07
                     91 03 06   FROM GR 90, EL 11
ACA-10               L     05 03 16   SECONDARY 1            P03
                     Y     05 03 17   SECONDARY 1            P03
```

```
*****************************************************************************************************************************
*  S T U D E R   *   S I G N A L   W I R E   L I S T                *   83/02/25 * 08:28      *   P A G E    33    *
*****************************************************************************************************************************
TAPE TRANSPORT & AUDIO CIRCUITS * STUDER A810 *                1.810.090.00              81/01/29

SIG.NAME COLOR TYPE GR EL PT  S DESCRIPTION OF ELEMENT
-------- ----- ---- -- -- --- - ------------------------------
ACA-125  2     Y     05 03 15   SECONDARY 1                P03
         2     U     24 04 01   TRANSFORMER FEED

ACA-130  6     Y     05 03 19   SECONDARY 1                P03
         6     U     26 02 01   TRANSFORMER FEED

ACA-25.6 5     Y     05 03 14   SECONDARY 1                P03
         5     L     06 01 01   FUSE, F 1

ACA-35.2 7     Y     05 03 12   SECONDARY 1                P03
         7     L     06 02 01   FUSE, F 2

ACAF35.2 7     L     06 02 02   FUSE, F 2
         7     J     06 05 01   RECTIFIER, D 2

\CB-10         Y     05 04 12   SECONDARY 2                P04
               L     05 04 13   SECONDARY 2                P04

 CB-125  0     Y     05 04 14   SECONDARY 2                P04
         0     U     24 04 02   TRANSFORMER FEED

 CB-130  6     Y     05 04 10   SECONDARY 2                P04
         6     U     26 02 02   TRANSFORMER FEED

 :B-25.6 4     Y     05 04 15   SECONDARY 2                P04
         4     L     06 03 03   SOLDER TERMINAL
         4     J     06 04 02   RECTIFIER, D 1
         4     Y     07 02 02   INPUT

 :B-35.2 2     Y     05 04 17   SECONDARY 2                P04
         2     J     06 05 02   RECTIFIER, D 2

 :C-10   4     L     05 03 18   SECONDARY 1                P03
         4     L     05 04 11   SECONDARY 2                P04

 :C-130  4     L     05 03 20   SECONDARY 1                P03
         4     L     05 04 09   SECONDARY 2                P04

 :C-25.6 4     L     05 03 13   SECONDARY 1                P03
         4     L     05 04 16   SECONDARY 2                P04

 :C-35.2 4     L     05 03 11   SECONDARY 1                P03
         4     L     05 04 18   SECONDARY 2                P04

 :MC-A   8     Y     26 03 01   CONNECTOR CAPSTAN MOTOR

 :MC-B   4     Y     26 03 02   CONNECTOR CAPSTAN MOTOR
         4     Y     26 04 01   CONN. PHASE SHIFT CAPACITOR
         4           26 05 01   PHASE SHIFT CAPACITOR

 :MC-C   5     Y     26 03 03   CONNECTOR CAPSTAN MOTOR
         5     Y     26 04 02   CONN. PHASE SHIFT CAPACITOR
         5           26 05 02   PHASE SHIFT CAPACITOR

 :ML-C   6     Y     09 01 04
         3     U     09 01 08
                                                            ./.

SIG.NAME COLOR TYPE GR EL PT  S DESCRIPTION OF ELEMENT
-------- ----- ---- -- -- --- - ------------------------------
(CONT.)  3     J     09 02 02   PHASE SHIFT CAPACITOR

ACML-H   1     Y     09 01 01
         5     Y     09 01 02
         6     U     09 01 05
         6     Y     24 05 01   CONN. BOARD SPOOLING MOTOR, LEFT

ACML-O   4     Y     09 01 03
         0     U     09 01 06
         1     U     09 01 07
         1     J     09 02 01   PHASE SHIFT CAPACITOR
         0     Y     24 05 02   CONN. BOARD SPOOLING MOTOR, LEFT

ACMR-C   5     Y     10 01 04
         3     U     10 01 08
         3     J     10 02 02   PHASE SHIFT CAPACITOR

ACMR-H   1     Y     10 01 01
         6     Y     10 01 02
         4     U     10 01 05
         4     Y     24 06 01   CONN. BOARD SPOOLING MOTOR, RIGH

ACMR-O   4     Y     10 01 03
         0     U     10 01 06
         1     U     10 01 07
         1     J     10 02 01   PHASE SHIFT CAPACITOR
         0     Y     24 06 02   CONN. BOARD SPOOLING MOTOR, RIGH

AFCSW-01             20 08 10   CONNECTOR HF-DRIVER, CH 1    J08
                     20 09 15   CONN. RECORD AMPLIFIER, CH 1 J09

AFCSW-02             20 13 10   CONNECTOR HF-DRIVER, CH 2    J13
                     20 14 15   CONN. RECORD AMPLIFIER, CH 2 J14

AN-POT   1           42 02 02   WIRE FIELD
         1           42 03 02   POTENTIOMETER

AN-RFTTL             20 02 13   CONN. TAPE DECK CONTROLLER   J02
                     20 20 11   CONN. SPOOLING MOTOR CONTR.  P01
                     24 01 11   FROM GR 20, EL 20

AN-RFTTR             20 02 14   CONN. TAPE DECK CONTROLLER   J02
                     20 20 12   CONN. SPOOLING MOTOR CONTR.  P01
                     24 01 12   FROM GR 20, EL 20

AN-TACHO 2     Y     26 03 04   CONNECTOR CAPSTAN MOTOR
         2           26 06 04   CAPACITIVE SENSOR

AN-TTL               24 02 11   CONN. TAPE TENS. UNIT, LEFT  J02
                     27 01 11   FROM GR 24, EL 02            J01

AN-TTR               24 03 11   CONN. TAPE TENS. UNIT, RIGHT J03
                     28 01 11   FROM GR 24, EL 03            J01

B-BDY-01             45 01 01   CONN. NOISE REDUCTION SYSTEM J01
```

SIG.NAME	COLOR	TYPE	GR	EL	PT	S	DESCRIPTION OF ELEMENT	
B-BDY-02			45	01	02		CONN. NOISE REDUCTION SYSTEM	J01
B-CH1			43	02	31		PERIPHERY CONTROLLER BOARD	P02
			43	03	31		KEY BOARD	
B-CH2			43	02	32		PERIPHERY CONTROLLER BOARD	P02
			43	03	32		KEY BOARD	
B-LED0			43	02	26		PERIPHERY CONTROLLER BOARD	P02
			43	03	26		KEY BOARD	
B-LED1			43	02	27		PERIPHERY CONTROLLER BOARD	P02
			43	03	27		KEY BOARD	
B-LED2			43	02	28		PERIPHERY CONTROLLER BOARD	P02
			43	03	28		KEY BOARD	
B-LED3			43	02	29		PERIPHERY CONTROLLER BOARD	P02
			43	03	29		KEY BOARD	
B-STO			43	02	30		PERIPHERY CONTROLLER BOARD	P02
			43	03	30		KEY BOARD	
B-TLC-01			45	01	11		CONN. NOISE REDUCTION SYSTEM	J01
B-TLC-02			45	01	13		CONN. NOISE REDUCTION SYSTEM	J01
BIASA-01			20	08	05		CONNECTOR HF-DRIVER, CH 1	J08
			20	09	06		CONN. RECORD AMPLIFIER, CH 1	J09
BIASA-02			20	13	05		CONNECTOR HF-DRIVER, CH 2	J13
			20	14	06		CONN. RECORD AMPLIFIER, CH 2	J14
BIASB-01			20	08	06		CONNECTOR HF-DRIVER, CH 1	J08
			20	09	07		CONN. RECORD AMPLIFIER, CH 1	J09
BIASB-02			20	13	06		CONNECTOR HF-DRIVER, CH 2	J13
			20	14	07		CONN. RECORD AMPLIFIER, CH 2	J14
BIASC-01			20	08	07		CONNECTOR HF-DRIVER, CH 1	J08
			20	09	08		CONN. RECORD AMPLIFIER, CH 1	J09
BIASC-02			20	13	07		CONNECTOR HF-DRIVER, CH 2	J13
			20	14	08		CONN. RECORD AMPLIFIER, CH 2	J14
BR-FAD		B	23	01	08		CONN. PARALLEL REMOTE CONTR.	J01
BR-FORW		B	23	01	03		CONN. PARALLEL REMOTE CONTR.	J01
BR-PLAY		B	23	01	15		CONN. PARALLEL REMOTE CONTR.	J01
BR-REC		B	23	01	09		CONN. PARALLEL REMOTE CONTR.	J01
BR-REW		B	23	01	02		CONN. PARALLEL REMOTE CONTR.	J01
BR-STOP		B	23	01	16		CONN. PARALLEL REMOTE CONTR.	J01

SIG.NAME	COLOR	TYPE	GR	EL	PT	S	DESCRIPTION OF ELEMENT	
BRC-BIA			43	02	25		PERIPHERY CONTROLLER BOARD	P02
			43	03	25		KEY BOARD	
BRC-LVL			43	02	23		PERIPHERY CONTROLLER BOARD	P02
			43	03	23		KEY BOARD	
BRC-TRB			43	02	24		PERIPHERY CONTROLLER BOARD	P02
			43	03	24		KEY BOARD	
BRP-BAS			43	02	22		PERIPHERY CONTROLLER BOARD	P02
			43	03	22		KEY BOARD	
BRP-LVL			43	02	20		PERIPHERY CONTROLLER BOARD	P02
			43	03	20		KEY BOARD	
BRP-TRB			43	02	21		PERIPHERY CONTROLLER BOARD	P02
			43	03	21		KEY BOARD	
CA-ADR-R			20	05	21B		CONNECTOR BUS CONVERTOR	J05
			20	06	27		CONN. CODE WRITE/READ UNIT	J06
			20	07	27		CONNECTOR CODE DELAY UNIT	J07
			20	08	27		CONNECTOR HF-DRIVER, CH 1	J08
			20	09	27		CONN. RECORD AMPLIFIER, CH 1	J09
			20	10	27		CONN. REPRODUCE AMPL., CH 1	J10
			20	11	27		CONN. LINE AMPLIFIER, CH 1	J11
			20	12	27		CONNECTOR MONO-STEREO-SWITCH	J12
			20	13	27		CONNECTOR HF-DRIVER, CH 2	J13
			20	14	27		CONN. RECORD AMPLIFIER, CH 2	J14
			20	15	27		CONN. REPRODUCE AMPL., CH 2	J15
			20	16	27		CONN. LINE AMPLIFIER, CH 2	J16
CA-ADR-S			20	05	22B		CONNECTOR BUS CONVERTOR	J05
			20	06	28		CONN. CODE WRITE/READ UNIT	J06
			20	07	28		CONNECTOR CODE DELAY UNIT	J07
			20	08	28		CONNECTOR HF-DRIVER, CH 1	J08
			20	09	28		CONN. RECORD AMPLIFIER, CH 1	J09
			20	10	28		CONN. REPRODUCE AMPL., CH 1	J10
			20	11	28		CONN. LINE AMPLIFIER, CH 1	J11
			20	12	28		CONNECTOR MONO-STEREO-SWITCH	J12
			20	13	28		CONNECTOR HF-DRIVER, CH 2	J13
			20	14	28		CONN. RECORD AMPLIFIER, CH 2	J14
			20	15	28		CONN. REPRODUCE AMPL., CH 2	J15
			20	16	28		CONN. LINE AMPLIFIER, CH 2	J16
CA-ADR-T			20	05	23B		CONNECTOR BUS CONVERTOR	J05
			20	06	29		CONN. CODE WRITE/READ UNIT	J06
			20	07	29		CONNECTOR CODE DELAY UNIT	J07
			20	08	29		CONNECTOR HF-DRIVER, CH 1	J08
			20	09	29		CONN. RECORD AMPLIFIER, CH 1	J09
			20	10	29		CONN. REPRODUCE AMPL., CH 1	J10
			20	11	29		CONN. LINE AMPLIFIER, CH 1	J11
			20	12	29		CONNECTOR MONO-STEREO-SWITCH	J12
			20	13	29		CONNECTOR HF-DRIVER, CH 2	J13
			20	14	29		CONN. RECORD AMPLIFIER, CH 2	J14
			20	15	29		CONN. REPRODUCE AMPL., CH 2	J15
			20	16	29		CONN. LINE AMPLIFIER, CH 2	J16

SIG.NAME	COLOR	TYPE	GR	EL	PT	S	DESCRIPTION OF ELEMENT	
CA-ADR-U			20	05	24B		CONNECTOR BUS CONVERTOR	J05
			20	06	30		CONN. CODE WRITE/READ UNIT	J06
			20	07	30		CONNECTOR CODE DELAY UNIT	J07
			20	08	30		CONNECTOR HF-DRIVER, CH 1	J08
			20	09	30		CONN. RECORD AMPLIFIER, CH 1	J09
			20	10	30		CONN. REPRODUCE AMPL., CH 1	J10
			20	11	30		CONN. LINE AMPLIFIER, CH 1	J11
			20	12	30		CONNECTOR MONO-STEREO-SWITCH	J12
			20	13	30		CONNECTOR HF-DRIVER, CH 2	J13
			20	14	30		CONN. RECORD AMPLIFIER, CH 2	J14
			20	15	30		CONN. REPRODUCE AMPL., CH 2	J15
			20	16	30		CONN. LINE AMPLIFIER, CH 2	J16
CA-BAD01			20	08	17		CONNECTOR HF-DRIVER, CH 1	J08
			20	09	17		CONN. RECORD AMPLIFIER, CH 1	J09
CA-BAD02			20	13	17		CONNECTOR HF-DRIVER, CH 2	J13
			20	14	17		CONN. RECORD AMPLIFIER, CH 2	J14
CA-CHSTC			20	05	11B		CONNECTOR BUS CONVERTOR	J05
			20	06	39		CONN. CODE WRITE/READ UNIT	J06
			20	07	39		CONNECTOR CODE DELAY UNIT	J07
CA-CHS01			20	05	12B		CONNECTOR BUS CONVERTOR	J05
			20	08	39		CONNECTOR HF-DRIVER, CH 1	J08
			20	09	39		CONN. RECORD AMPLIFIER, CH 1	J09
			20	10	39		CONN. REPRODUCE AMPL., CH 1	J10
			20	11	39		CONN. LINE AMPLIFIER, CH 1	J11
CA-CHS02			20	05	14B		CONNECTOR BUS CONVERTOR	J05
			20	13	39		CONNECTOR HF-DRIVER, CH 2	J13
			20	14	39		CONN. RECORD AMPLIFIER, CH 2	J14
			20	15	39		CONN. REPRODUCE AMPL., CH 2	J15
			20	16	39		CONN. LINE AMPLIFIER, CH 2	J16
CA-DATA0			20	05	25B		CONNECTOR BUS CONVERTOR	J05
			20	06	31		CONN. CODE WRITE/READ UNIT	J06
			20	07	31		CONNECTOR CODE DELAY UNIT	J07
			20	08	31		CONNECTOR HF-DRIVER, CH 1	J08
			20	09	31		CONN. RECORD AMPLIFIER, CH 1	J09
			20	10	31		CONN. REPRODUCE AMPL., CH 1	J10
			20	11	31		CONN. LINE AMPLIFIER, CH 1	J11
			20	12	31		CONNECTOR MONO-STEREO-SWITCH	J12
			20	13	31		CONNECTOR HF-DRIVER, CH 2	J13
			20	14	31		CONN. RECORD AMPLIFIER, CH 2	J14
			20	15	31		CONN. REPRODUCE AMPL., CH 2	J15
			20	16	31		CONN. LINE AMPLIFIER, CH 2	J16
CA-DATA1			20	05	26B		CONNECTOR BUS CONVERTOR	J05
			20	06	32		CONN. CODE WRITE/READ UNIT	J06
			20	07	32		CONNECTOR CODE DELAY UNIT	J07
			20	08	32		CONNECTOR HF-DRIVER, CH 1	J08
			20	09	32		CONN. RECORD AMPLIFIER, CH 1	J09
			20	10	32		CONN. REPRODUCE AMPL., CH 1	J10
			20	11	32		CONN. LINE AMPLIFIER, CH 1	J11
			20	12	32		CONNECTOR MONO-STEREO-SWITCH	J12

./.

SIG.NAME	COLOR	TYPE	GR	EL	PT	S	DESCRIPTION OF ELEMENT	
(CONT.)			20	13	32		CONNECTOR HF-DRIVER, CH 2	J13
			20	14	32		CONN. RECORD AMPLIFIER, CH 2	J14
			20	15	32		CONN. REPRODUCE AMPL., CH 2	J15
			20	16	32		CONN. LINE AMPLIFIER, CH 2	J16
CA-DATA2			20	05	27B		CONNECTOR BUS CONVERTOR	J05
			20	06	33		CONN. CODE WRITE/READ UNIT	J06
			20	07	33		CONNECTOR CODE DELAY UNIT	J07
			20	08	33		CONNECTOR HF-DRIVER, CH 1	J08
			20	09	33		CONN. RECORD AMPLIFIER, CH 1	J09
			20	10	33		CONN. REPRODUCE AMPL., CH 1	J10
			20	11	33		CONN. LINE AMPLIFIER, CH 1	J11
			20	12	33		CONNECTOR MONO-STEREO-SWITCH	J12
			20	13	33		CONNECTOR HF-DRIVER, CH 2	J13
			20	14	33		CONN. RECORD AMPLIFIER, CH 2	J14
			20	15	33		CONN. REPRODUCE AMPL., CH 2	J15
			20	16	33		CONN. LINE AMPLIFIER, CH 2	J16
CA-DATA3			20	05	28B		CONNECTOR BUS CONVERTOR	J05
			20	06	34		CONN. CODE WRITE/READ UNIT	J06
			20	07	34		CONNECTOR CODE DELAY UNIT	J07
			20	08	34		CONNECTOR HF-DRIVER, CH 1	J08
			20	09	34		CONN. RECORD AMPLIFIER, CH 1	J09
			20	10	34		CONN. REPRODUCE AMPL., CH 1	J10
			20	11	34		CONN. LINE AMPLIFIER, CH 1	J11
			20	12	34		CONNECTOR MONO-STEREO-SWITCH	J12
			20	13	34		CONNECTOR HF-DRIVER, CH 2	J13
			20	14	34		CONN. RECORD AMPLIFIER, CH 2	J14
			20	15	34		CONN. REPRODUCE AMPL., CH 2	J15
			20	16	34		CONN. LINE AMPLIFIER, CH 2	J16
CA-DATA4			20	05	29B		CONNECTOR BUS CONVERTOR	J05
			20	06	35		CONN. CODE WRITE/READ UNIT	J06
			20	07	35		CONNECTOR CODE DELAY UNIT	J07
			20	08	35		CONNECTOR HF-DRIVER, CH 1	J08
			20	09	35		CONN. RECORD AMPLIFIER, CH 1	J09
			20	10	35		CONN. REPRODUCE AMPL., CH 1	J10
			20	11	35		CONN. LINE AMPLIFIER, CH 1	J11
			20	12	35		CONNECTOR MONO-STEREO-SWITCH	J12
			20	13	35		CONNECTOR HF-DRIVER, CH 2	J13
			20	14	35		CONN. RECORD AMPLIFIER, CH 2	J14
			20	15	35		CONN. REPRODUCE AMPL., CH 2	J15
			20	16	35		CONN. LINE AMPLIFIER, CH 2	J16
CA-DATA5			20	05	30B		CONNECTOR BUS CONVERTOR	J05
			20	06	36		CONN. CODE WRITE/READ UNIT	J06
			20	07	36		CONNECTOR CODE DELAY UNIT	J07
			20	08	36		CONNECTOR HF-DRIVER, CH 1	J08
			20	09	36		CONN. RECORD AMPLIFIER, CH 1	J09
			20	10	36		CONN. REPRODUCE AMPL., CH 1	J10
			20	11	36		CONN. LINE AMPLIFIER, CH 1	J11
			20	12	36		CONNECTOR MONO-STEREO-SWITCH	J12
			20	13	36		CONNECTOR HF-DRIVER, CH 2	J13
			20	14	36		CONN. RECORD AMPLIFIER, CH 2	J14
			20	15	36		CONN. REPRODUCE AMPL., CH 2	J15
			20	16	36		CONN. LINE AMPLIFIER, CH 2	J16

SIG.NAME	COLOR	TYPE	GR	EL	PT	S	DESCRIPTION OF ELEMENT	
CA-DATA6			20	05	31B		CONNECTOR BUS CONVERTOR	J05
			20	06	37		CONN. CODE WRITE/READ UNIT	J06
			20	07	37		CONNECTOR CODE DELAY UNIT	J07
			20	08	37		CONNECTOR HF-DRIVER, CH 1	J08
			20	09	37		CONN. RECORD AMPLIFIER, CH 1	J09
			20	10	37		CONN. REPRODUCE AMPL., CH 1	J10
			20	11	37		CONN. LINE AMPLIFIER, CH 1	J11
			20	12	37		CONNECTOR MONO-STEREO-SWITCH	J12
			20	13	37		CONNECTOR HF-DRIVER, CH 2	J13
			20	14	37		CONN. RECORD AMPLIFIER, CH 2	J14
			20	15	37		CONN. REPRODUCE AMPL., CH 2	J15
			20	16	37		CONN. LINE AMPLIFIER, CH 2	J16
CA-DATA7			20	05	32B		CONNECTOR BUS CONVERTOR	J05
			20	06	38		CONN. CODE WRITE/READ UNIT	J06
			20	07	38		CONNECTOR CODE DELAY UNIT	J07
			20	08	38		CONNECTOR HF-DRIVER, CH 1	J08
			20	09	38		CONN. RECORD AMPLIFIER, CH 1	J09
			20	10	38		CONN. REPRODUCE AMPL., CH 1	J10
			20	11	38		CONN. LINE AMPLIFIER, CH 1	J11
			20	12	38		CONNECTOR MONO-STEREO-SWITCH	J12
			20	13	38		CONNECTOR HF-DRIVER, CH 2	J13
			20	14	38		CONN. RECORD AMPLIFIER, CH 2	J14
			20	15	38		CONN. REPRODUCE AMPL., CH 2	J15
			20	16	38		CONN. LINE AMPLIFIER, CH 2	J16
CA-EQL01			20	10	15		CONN. REPRODUCE AMPL., CH 1	J10
			20	11	16		CONN. LINE AMPLIFIER, CH 1	J11
CA-EQL02			20	15	15		CONN. REPRODUCE AMPL., CH 2	J15
			20	16	16		CONN. LINE AMPLIFIER, CH 2	J16
CA-LSW01			20	10	17		CONN. REPRODUCE AMPL., CH 1	J10
			20	11	18		CONN. LINE AMPLIFIER, CH 1	J11
CA-LSW02			20	15	17		CONN. REPRODUCE AMPL., CH 2	J15
			20	16	18		CONN. LINE AMPLIFIER, CH 2	J16
CA-MONO			20	05	13B		CONNECTOR BUS CONVERTOR	J05
			20	12	39		CONNECTOR MONO-STEREO-SWITCH	J12
CA-RSW01			20	08	18		CONNECTOR HF-DRIVER, CH 1	J08
			20	09	18		CONN. RECORD AMPLIFIER, CH 1	J09
CA-RSW02			20	13	18		CONNECTOR HF-DRIVER, CH 2	J13
			20	14	18		CONN. RECORD AMPLIFIER, CH 2	J14
CA-SAFE			20	05	20B		CONNECTOR BUS CONVERTOR	J05
			20	06	26		CONN. CODE WRITE/READ UNIT	J06
			20	07	26		CONNECTOR CODE DELAY UNIT	J07
			20	08	26		CONNECTOR HF-DRIVER, CH 1	J08
			20	09	26		CONN. RECORD AMPLIFIER, CH 1	J09
			20	10	26		CONN. REPRODUCE AMPL., CH 1	J10
			20	11	26		CONN. LINE AMPLIFIER, CH 1	J11
			20	12	26		CONNECTOR MONO-STEREO-SWITCH	J12
			20	13	26		CONNECTOR HF-DRIVER, CH 2	J13

./.

SIG.NAME	COLOR	TYPE	GR	EL	PT	S	DESCRIPTION OF ELEMENT	
(CONT.)			20	14	26		CONN. RECORD AMPLIFIER, CH 2	J14
			20	15	26		CONN. REPRODUCE AMPL., CH 2	J15
			20	16	26		CONN. LINE AMPLIFIER, CH 2	J16
CA-SYN01			20	10	16		CONN. REPRODUCE AMPL., CH 1	J10
			20	11	17		CONN. LINE AMPLIFIER, CH 1	J11
CA-SYN02			20	15	16		CONN. REPRODUCE AMPL., CH 2	J15
			20	16	17		CONN. LINE AMPLIFIER, CH 2	J16
EQUAL-01			20	09	02		CONN. RECORD AMPLIFIER, CH 1	J09
			20	10	02		CONN. REPRODUCE AMPL., CH 1	J10
EQUAL-02			20	14	02		CONN. RECORD AMPLIFIER, CH 2	J14
			20	15	02		CONN. REPRODUCE AMPL., CH 2	J15
ERACS-01			20	08	09		CONNECTOR HF-DRIVER, CH 1	J08
ERACS-02	7		20	13	09		CONNECTOR HF-DRIVER, CH 2	J13
		B	32	01	20		CONN. HEAD BLOCK ASSEMBLY	P01
ERAHH-TC	0		20	06	04		CONN. CODE WRITE/READ UNIT	J06
	0	B	32	01	11		CONN. HEAD BLOCK ASSEMBLY	P01
ERAHH-01			20	08	14		CONNECTOR HF-DRIVER, CH 1	J08
ERAHH-02			20	13	14		CONNECTOR HF-DRIVER, CH 2	J13
ERAHL-TC	6		20	06	05		CONN. CODE WRITE/READ UNIT	J06
	6	B	32	01	23		CONN. HEAD BLOCK ASSEMBLY	P01
ERAHL-01	6		20	08	12		CONNECTOR HF-DRIVER, CH 1	J08
	6	B	32	01	12		CONN. HEAD BLOCK ASSEMBLY	P01
ERAHL-02	6		20	13	12		CONNECTOR HF-DRIVER, CH 2	J13
	6	B	32	01	24		CONN. HEAD BLOCK ASSEMBLY	P01
ERAHM-01	0		20	08	13		CONNECTOR HF-DRIVER, CH 1	J08
	0	B	32	01	13		CONN. HEAD BLOCK ASSEMBLY	P01
ERAHM-02	0		20	13	13		CONNECTOR HF-DRIVER, CH 2	J13
	0	B	32	01	25		CONN. HEAD BLOCK ASSEMBLY	P01
ERAHO-01			20	08	15		CONNECTOR HF-DRIVER, CH 1	J08
ERAHO-02			20	13	15		CONNECTOR HF-DRIVER, CH 2	J13
FAD1		B	23	01	11		CONN. PARALLEL REMOTE CONTR.	J01
FAD2		B	23	01	12		CONN. PARALLEL REMOTE CONTR.	J01
GND	5/4		01	01	03		CONNECTOR POWER INPUT	P01
			08	01	01		EARTH CONTACT	
	5/4		08	02	01		GROUND	
			20	03	08		CONN. SERIAL REM. CONTROLLER	J03
			20	22	08		CONN. SERIAL REMOTE CONTROL	P03

./.

SIG.NAME	COLOR	TYPE	GR	EL	PT	S	DESCRIPTION OF ELEMENT	
(CONT.)			22	01	09		FROM GR 20, EL 22	J01
	0	A	34	01	13		FROM GR 20, EL 26+27	P01
	0	L	34	02	01		GROUND CONN. TO GR34, EL01,	PT13
			35	01	01		CONNECTOR XLR, INPUT	J01
			35	02	01		CONNECTOR XLR, OUTPUT	P01
			36	01	01		CONNECTOR XLR, INPUT	J01
			36	02	01		CONNECTOR XLR, OUTPUT	P01
			37	01	01		CONNECTOR XLR, INPUT	J01
			37	02	01		CONNECTOR XLR, OUTPUT	P01
			39	01	18		CALIBRATION BOARD	
			40	01	18		CALIBRATION BOARD	
	0	L	90	08	01		GROUND CONNECTION	
INPAD-01			20	11	07		CONN. LINE AMPLIFIER, CH 1	J11
			20	12	01		CONNECTOR MONO-STEREO-SWITCH	J12
	6	N	20	26	06		CONN. TO VU-METER PANEL, CH1	J19
	6	A	34	01	03		FROM GR 20, EL 26+27	P01
	6	U	39	01	07		CALIBRATION BOARD	
	6	N	90	09	06		CONN. VU-METER CH 1, AUDIO	J01
INPAD-02			20	12	03		CONNECTOR MONO-STEREO-SWITCH	J12
			20	16	07		CONN. LINE AMPLIFIER, CH 2	J16
	6	N	20	27	06		CONN. TO VU-METER PANEL, CH2	J20
	6	A	34	01	10		FROM GR 20, EL 26+27	P01
	6	U	40	01	07		CALIBRATION BOARD	
	6	N	90	10	06		CONN. VU-METER CH 2, AUDIO	J02
INPAU-01	2	U	39	01	08		CALIBRATION BOARD	
	2	L	39	03	02		POTENTIOMETER RECORD-LEVEL	
INPAU-02	2	U	40	01	08		CALIBRATION BOARD	
	2	L	40	03	02		POTENTIOMETER RECORD-LEVEL	
INPDI-01			20	11	06		CONN. LINE AMPLIFIER, CH 1	J11
	0	N	20	26	05		CONN. TO VU-METER PANEL, CH1	J19
	0	A	34	01	16		FROM GR 20, EL 26+27	P01
	0	U	39	01	05		CALIBRATION BOARD	
	1	U	39	01	06		CALIBRATION BOARD	
	1	L	39	03	01		POTENTIOMETER RECORD-LEVEL	
	0	N	90	09	05		CONN. VU-METER CH 1, AUDIO	J01
			90	11	16		CONNECTOR MONITOR AMPLIFIER	P07
			91	03	16		FROM GR 90, EL 11	
INPDI-02			20	16	06		CONN. LINE AMPLIFIER, CH 2	J16
	0	N	20	27	05		CONN. TO VU-METER PANEL, CH2	J20
	0	A	34	01	23		FROM GR 20, EL 26+27	P01
	0	U	40	01	05		CALIBRATION BOARD	
	1	U	40	01	06		CALIBRATION BOARD	
	1	L	40	03	01		POTENTIOMETER RECORD-LEVEL	
	0	N	90	10	05		CONN. VU-METER CH 2, AUDIO	J02
			90	11	09		CONNECTOR MONITOR AMPLIFIER	P07
			91	03	09		FROM GR 90, EL 11	
K-BRAKE			20	02	15		CONN. TAPE DECK CONTROLLER	J02
	1	U	20	30	05		WIRE FIELD (SOLENOIDS)	
	1	X	31	01	02		BRAKE SOLENOID	

SIG.NAME	COLOR	TYPE	GR	EL	PT	S	DESCRIPTION OF ELEMENT	
K-EDIT			20	02	22		CONN. TAPE DECK CONTROLLER	J02
	5	U	20	30	02		WIRE FIELD (SOLENOIDS)	
	5	U	20	30	03		WIRE FIELD (SOLENOIDS)	
	5	U	20	30	06		WIRE FIELD (SOLENOIDS)	
	5	X	27	03	02		EDIT SOLENOID, LEFT	
	5	X	28	03	02		EDIT SOLENOID, RIGHT	
	5	X	31	02	02		EDIT-BRAKE SOLENOID	
K-LIFT			20	02	16		CONN. TAPE DECK CONTROLLER	J02
	9	U	20	30	04		WIRE FIELD (SOLENOIDS)	
	9	X	30	01	02		LIFT SOLENOID	
K-PRESS			20	02	17		CONN. TAPE DECK CONTROLLER	J02
	8	U	20	30	01		WIRE FIELD (SOLENOIDS)	
	8	X	29	01	02		PRESS SOLENOID	
K-REC-01			20	08	02		CONNECTOR HF-DRIVER, CH 1	J08
			20	09	04		CONN. RECORD AMPLIFIER, CH 1	J09
			20	10	04		CONN. REPRODUCE AMPL., CH 1	J10
K-REC-02			20	13	02		CONNECTOR HF-DRIVER, CH 2	J13
			20	14	04		CONN. RECORD AMPLIFIER, CH 2	J14
			20	15	04		CONN. REPRODUCE AMPL., CH 2	J15
LINE1	1		01	01	01		CONNECTOR POWER INPUT	P01
	1	J	02	01	01		POWER SWITCH	
LINE2	6		01	01	02		CONNECTOR POWER INPUT	P01
	6	J	02	01	02		POWER SWITCH	
LINFA-TC	0		20	06	15		CONN. CODE WRITE/READ UNIT	J06
	0	D	37	03	04		CONNECTOR LINE FILTER, INP.	P01
LINFA-01	0		20	11	14		CONN. LINE AMPLIFIER, CH 1	J11
	0	D	35	03	04		CONNECTOR LINE FILTER, INP.	P01
LINFA-02	0		20	16	14		CONN. LINE AMPLIFIER, CH 2	J16
	0	D	36	03	04		CONNECTOR LINE FILTER, INP.	P01
LINFB-TC	6		20	06	16		CONN. CODE WRITE/READ UNIT	J06
	6	D	37	03	01		CONNECTOR LINE FILTER, INP.	P01
LINFB-01	6		20	11	15		CONN. LINE AMPLIFIER, CH 1	J11
	6	D	35	03	01		CONNECTOR LINE FILTER, INP.	P01
LINFB-02	6		20	16	15		CONN. LINE AMPLIFIER, CH 2	J16
	6	D	36	03	01		CONNECTOR LINE FILTER, INP.	P01
LINSA-TC			37	01	02		CONNECTOR XLR, INPUT	J01
LINSA-01			35	01	02		CONNECTOR XLR, INPUT	J01
LINSA-02			36	01	02		CONNECTOR XLR, INPUT	J01
LINSB-TC			37	01	03		CONNECTOR XLR, INPUT	J01

SIG.NAME	COLOR	TYPE	GR	EL	PT	S	DESCRIPTION OF ELEMENT	
LINSB-01			35	01	03		CONNECTOR XLR, INPUT	J01
LINSB-02			36	01	03		CONNECTOR XLR, INPUT	J01
LOUFA-TC	0		20	06	17		CONN. CODE WRITE/READ UNIT	J06
	0	D	37	04	04		CONNECTOR LINE FILTER, OUTP.	P02
LOUFA-01	0		20	11	03		CONN. LINE AMPLIFIER, CH 1	J11
	0	N	20	26	02		CONN. TO VU-METER PANEL, CH1	J19
	0	A	34	01	05		FROM GR 20, EL 26+27	P01
	0	D	35	04	04		CONNECTOR LINE FILTER, OUTP.	P02
	0	U	39	01	09		CALIBRATION BOARD	
			39	02	07		CALIBRATION BOARD	J01
	0	N	90	09	02		CONN. VU-METER CH 1, AUDIO	J01
LOUFA-02	0		20	16	03		CONN. LINE AMPLIFIER, CH 2	J16
	0	N	20	27	02		CONN. TO VU-METER PANEL, CH2	J20
	0	A	34	01	12		FROM GR 20, EL 26+27	P01
	0	D	36	04	04		CONNECTOR LINE FILTER, OUTP.	P02
	0	U	40	01	09		CALIBRATION BOARD	
			40	02	07		CALIBRATION BOARD	J01
	0	N	90	10	02		CONN. VU-METER CH 2, AUDIO	J02
LOUFB-TC	6		20	06	18		CONN. CODE WRITE/READ UNIT	J06
	6	D	37	04	01		CONNECTOR LINE FILTER, OUTP.	P02
LOUFB-01	6		20	11	04		CONN. LINE AMPLIFIER, CH 1	J11
	6	N	20	26	03		CONN. TO VU-METER PANEL, CH1	J19
	6	A	34	01	18		FROM GR 20, EL 26+27	P01
	6	D	35	04	01		CONNECTOR LINE FILTER, OUTP.	P02
	6	U	39	01	10		CALIBRATION BOARD	
			39	02	06		CALIBRATION BOARD	J01
	6	N	90	09	03		CONN. VU-METER CH 1, AUDIO	J01
LOUFB-02	6		20	16	04		CONN. LINE AMPLIFIER, CH 2	J16
	6	N	20	27	03		CONN. TO VU-METER PANEL, CH2	J20
	6	A	34	01	25		FROM GR 20, EL 26+27	P01
	6	D	36	04	01		CONNECTOR LINE FILTER, OUTP.	P02
	6	U	40	01	10		CALIBRATION BOARD	
			40	02	06		CALIBRATION BOARD	J01
	6	N	90	10	03		CONN. VU-METER CH 2, AUDIO	J02
LOUSA-TC			37	02	02		CONNECTOR XLR, OUTPUT	P01
LOUSA-01			35	02	02		CONNECTOR XLR, OUTPUT	P01
LOUSA-02			36	02	02		CONNECTOR XLR, OUTPUT	P01
LOUSB-TC			37	02	03		CONNECTOR XLR, OUTPUT	P01
LOUSB-01			35	02	03		CONNECTOR XLR, OUTPUT	P01
LOUSB-02			36	02	03		CONNECTOR XLR, OUTPUT	P01
MONIT-01			20	11	01		CONN. LINE AMPLIFIER, CH 1	J11
	6	N	20	29	03		CONNECTOR TO MASTER PANEL	J22

./.

SIG.NAME	COLOR	TYPE	GR	EL	PT	S	DESCRIPTION OF ELEMENT	
(CONT.)	6	L	38	01	01A		CONNECTOR, HEAD PHONES	
	6	L	38	01	01B		CONNECTOR, HEAD PHONES	
	6	U	38	03	01		MASTER SWITCHING BOARD	
MONIT-02			20	16	01		CONN. LINE AMPLIFIER, CH 2	J16
	0	N	20	29	01		CONNECTOR TO MASTER PANEL	J22
	0	L	38	01	02A		CONNECTOR, HEAD PHONES	
	0	L	38	01	02B		CONNECTOR, HEAD PHONES	
	0	U	38	03	02		MASTER SWITCHING BOARD	
MONITAMP	9	N	20	28	02		CONN. TO MONITOR AMPLIFIER	J21
	9	N	20	29	05		CONNECTOR TO MASTER PANEL	J22
	9	L	38	02	05A		LEVEL POTENTIOMETER	
	6	L	38	02	06A		LEVEL POTENTIOMETER	
	9	U	38	03	03		MASTER SWITCHING BOARD	
	6	U	38	03	06B		MASTER SWITCHING BOARD	
	9	U	41	01	05		FROM GR 20, EL 28 WIRE FIELD	
PRIMW-1	1	L	04	02	05		VOLTAGE SELECTOR	
	1	Y	05	01	01		PRIMARY 1	P01
PRIMW-2	2	L	04	02	07		VOLTAGE SELECTOR	
	2	Y	05	01	02		PRIMARY 1	P01
PRIMW-3	3	L	04	02	02		VOLTAGE SELECTOR	
	3	Y	05	01	03		PRIMARY 1	P01
PRIMW-4	4+4	L	04	02	04A		VOLTAGE SELECTOR	
	4	Y	05	01	04		PRIMARY 1	P01
PRIMW-5	5	L	04	02	06		VOLTAGE SELECTOR	
	5	Y	05	02	05		PRIMARY 2	P02
PRIMW-6	6+4	L	04	02	04B		VOLTAGE SELECTOR	
	6	Y	05	02	06		PRIMARY 2	P02
PRIMW-7	7	L	04	02	03		VOLTAGE SELECTOR	
	7	Y	05	02	07		PRIMARY 2	P02
RCCOMM			20	03	05		CONN. SERIAL REM. CONTROLLER	J03
			20	22	05		CONN. SERIAL REMOTE CONTROL	P03
			22	01	03		FROM GR 20, EL 22	J01
RCVDATA			20	03	06		CONN. SERIAL REM. CONTROLLER	J03
			20	22	06		CONN. SERIAL REMOTE CONTROL	P03
			22	01	08		FROM GR 20, EL 22	J01
RECHH-TC	0		20	06	07		CONN. CODE WRITE/READ UNIT	J06
	0	B	32	01	10		CONN. HEAD BLOCK ASSEMBLY	P01
RECHH-01	0		20	09	10		CONN. RECORD AMPLIFIER, CH 1	J09
	0	B	32	01	06		CONN. HEAD BLOCK ASSEMBLY	P01
RECHH-02	0		20	14	10		CONN. RECORD AMPLIFIER, CH 2	J14
	0	B	32	01	19		CONN. HEAD BLOCK ASSEMBLY	P01

SIG.NAME	COLOR	TYPE	GR	EL	PT	S	DESCRIPTION OF ELEMENT	
RECHL-TC	6		20	06	08		CONN. CODE WRITE/READ UNIT	J06
	6	B	32	01	22		CONN. HEAD BLOCK ASSEMBLY	P01
RECHL-01	6		20	09	09		CONN. RECORD AMPLIFIER, CH 1	J09
	6	B	32	01	05		CONN. HEAD BLOCK ASSEMBLY	P01
RECHL-02	6		20	14	09		CONN. RECORD AMPLIFIER, CH 2	J14
	6	B	32	01	18		CONN. HEAD BLOCK ASSEMBLY	P01
RECIN-01			20	09	01		CONN. RECORD AMPLIFIER, CH 1	J09
			20	11	08		CONN. LINE AMPLIFIER, CH 1	J11
			20	12	15		CONNECTOR MONO-STEREO-SWITCH	J12
RECIN-02			20	12	13		CONNECTOR MONO-STEREO-SWITCH	J12
			20	14	01		CONN. RECORD AMPLIFIER, CH 2	J14
			20	16	08		CONN. LINE AMPLIFIER, CH 2	J16
REPHH-TC	0		20	06	10		CONN. CODE WRITE/READ UNIT	J06
	0	B	32	01	09		CONN. HEAD BLOCK ASSEMBLY	P01
REPHH-01	1	L	32	02	12		REPRODUCE PREAMPLIFIER	
REPHH-02	1	L	32	02	14		REPRODUCE PREAMPLIFIER	
REPHL-TC	6		20	06	11		CONN. CODE WRITE/READ UNIT	J06
	6	B	32	01	21		CONN. HEAD BLOCK ASSEMBLY	P01
REPHL-01	0	L	32	02	11		REPRODUCE PREAMPLIFIER	
REPHL-02	0	L	32	02	13		REPRODUCE PREAMPLIFIER	
REPRE-01	0		20	10	06		CONN. REPRODUCE AMPL., CH 1	J10
	0	B	32	01	01		CONN. HEAD BLOCK ASSEMBLY	P01
	0	L	32	02	02		REPRODUCE PREAMPLIFIER	
REPRE-02	0		20	15	06		CONN. REPRODUCE AMPL., CH 2	J15
	0	B	32	01	14		CONN. HEAD BLOCK ASSEMBLY	P01
	0	L	32	02	07		REPRODUCE PREAMPLIFIER	
REPRO-01	6		20	10	07		CONN. REPRODUCE AMPL., CH 1	J10
	6	B	32	01	02		CONN. HEAD BLOCK ASSEMBLY	P01
	6	L	32	02	03		REPRODUCE PREAMPLIFIER	
REPRO-02	6		20	15	07		CONN. REPRODUCE AMPL., CH 2	J15
	6	B	32	01	15		CONN. HEAD BLOCK ASSEMBLY	P01
	6	L	32	02	06		REPRODUCE PREAMPLIFIER	
RESERVE			43	02	04		PERIPHERY CONTROLLER BOARD	P02
			43	03	04		KEY BOARD	
S-AKBENA			43	02	08		PERIPHERY CONTROLLER BOARD	P02
			43	03	08		KEY BOARD	
S-EHEAD1			43	02	01		PERIPHERY CONTROLLER BOARD	P02
			43	03	01		KEY BOARD	

SIG.NAME	COLOR	TYPE	GR	EL	PT	S	DESCRIPTION OF ELEMENT	
S-EHEAD2			43	02	02		PERIPHERY CONTROLLER BOARD	P02
			43	03	02		KEY BOARD	
S-LINELA			43	02	05		PERIPHERY CONTROLLER BOARD	P02
			43	03	05		KEY BOARD	
S-LINELB			43	02	06		PERIPHERY CONTROLLER BOARD	P02
			43	03	06		KEY BOARD	
S-LINE1	1	J	02	01	03		POWER SWITCH	
	1	J	03	01	01		MAINS FILTER, INPUT	
S-LINE2	6	J	02	01	04		POWER SWITCH	
	6	J	03	01	02		MAINS FILTER, INPUT	
S-NABCCI			43	02	07		PERIPHERY CONTROLLER BOARD	P02
			43	03	07		KEY BOARD	
S-PLCNTR			43	02	03		PERIPHERY CONTROLLER BOARD	P02
			43	03	03		KEY BOARD	
SF-LINE1	1	J	03	02	01		MAINS FILTER, OUTPUT	
	1	L	04	01	01		FUSE HOLDER	
SF-LINE2	6	J	03	02	02		MAINS FILTER, OUTPUT	
	6+8	L	04	02	01		VOLTAGE SELECTOR	
	8	Y	05	02	08		PRIMARY 2	P02
SHIELD			20	03	01		CONN. SERIAL REM. CONTROLLER	J03
			20	22	01		CONN. SERIAL REMOTE CONTROL	P03
			22	01	01		FROM GR 20, EL 22	J01
SNCOMM			20	03	04		CONN. SERIAL REM. CONTROLLER	J03
			20	22	04		CONN. SERIAL REMOTE CONTROL	P03
			22	01	07		FROM GR 20, EL 22	J01
SNDATA			20	03	03		CONN. SERIAL REM. CONTROLLER	J03
			20	22	03		CONN. SERIAL REMOTE CONTROL	P03
			22	01	02		FROM GR 20, EL 22	J01
SPARE			20	03	09		CONN. SERIAL REM. CONTROLLER	J03
			20	22	09		CONN. SERIAL REMOTE CONTROL	P03
			22	01	05		FROM GR 20, EL 22	J01
SR-FORW		B	23	01	21		CONN. PARALLEL REMOTE CONTR.	J01
SR-LIFT		B	23	01	17		CONN. PARALLEL REMOTE CONTR.	J01
SR-LOCL		B	23	01	18		CONN. PARALLEL REMOTE CONTR.	J01
SR-PLAY		B	23	01	22		CONN. PARALLEL REMOTE CONTR.	J01
SR-REC		B	23	01	19		CONN. PARALLEL REMOTE CONTR.	J01
SR-REW		B	23	01	20		CONN. PARALLEL REMOTE CONTR.	J01

SIG.NAME	COLOR	TYPE	GR	EL	PT	S	DESCRIPTION OF ELEMENT	
SR-STOP		B	23	01	23		CONN. PARALLEL REMOTE CONTR.	J01
SR-TRANS		B	23	01	06		CONN. PARALLEL REMOTE CONTR.	J01
SR-VRSPD		B	23	01	05		CONN. PARALLEL REMOTE CONTR.	J01
STABIN-1	5	L	06	01	02		FUSE, F 1	
	5	L	06	03	01		SOLDER TERMINAL	
	5	J	06	04	01		RECTIFIER, D 1	
	5	Y	07	02	01		INPUT	
STABIN-3	1	J	06	05	04		RECTIFIER, D 2	
	1	L	06	08	02		CAPACITOR, C 1	
	1	Y	07	02	03		INPUT	
STABIN-4	3	J	06	05	03		RECTIFIER, D 2	
	3	L	06	08	01		CAPACITOR, C 1	
	3	Y	07	02	04		INPUT	
STABIN-5	2	J	06	04	03		RECTIFIER, D 1	
	2	L	06	06	01		CAPACITOR, C 2	
	2	L	06	07	01		CAPACITOR, C 3	
	2	Y	07	02	05		INPUT	
STABIN-6	6	J	06	04	04		RECTIFIER, D 1	
	6	L	06	06	02		CAPACITOR, C 2	
	6	L	06	07	02		CAPACITOR, C 3	
	6	Y	07	02	06		INPUT	
STUBUS1			20	03	07		CONN. SERIAL REM. CONTROLLER	J03
			20	22	07		CONN. SERIAL REMOTE CONTROL	P03
			22	01	04		FROM GR 20, EL 22	J01
STUBUS2			20	03	02		CONN. SERIAL REM. CONTROLLER	J03
			20	22	02		CONN. SERIAL REMOTE CONTROL	P03
			22	01	06		FROM GR 20, EL 22	J01
SYNHH-01			20	09	13		CONN. RECORD AMPLIFIER, CH 1	J09
			20	10	13		CONN. REPRODUCE AMPL., CH 1	J10
SYNHH-02			20	14	13		CONN. RECORD AMPLIFIER, CH 2	J14
			20	15	13		CONN. REPRODUCE AMPL., CH 2	J15
SYNHL-01			20	09	12		CONN. RECORD AMPLIFIER, CH 1	J09
			20	10	12		CONN. REPRODUCE AMPL., CH 1	J10
SYNHL-02			20	14	12		CONN. RECORD AMPLIFIER, CH 2	J14
			20	15	12		CONN. REPRODUCE AMPL., CH 2	J15
SYPRE-01			20	10	03		CONN. REPRODUCE AMPL., CH 1	J10
SYPRE-02			20	15	03		CONN. REPRODUCE AMPL., CH 2	J15
T-ACSTR			20	01	25		CONNECTOR MPU UNIT	J01
			20	03	25		CONN. SERIAL REM. CONTROLLER	J03
			20	04	25		CONN. PERIPHERY CONTROLLER	J04

./.

SIG.NAME	COLOR	TYPE	GR	EL	PT	S	DESCRIPTION OF ELEMENT	
(CONT.)			20	05	14A		CONNECTOR BUS CONVERTOR	J05
			43	01	25		CONN. BASIS BOARD (EL 04)	P01
T-ADOPT1			25	06	14		CONN. COMMANDS MASTER PANEL	P06
			25	07	14		CONN. COMM. VARI SPEED PANEL	P07
			38	04	14		MASTER CONTROL BOARD	
			42	01	14		FEED CONNECTOR FROM GR 25, EL 07	
T-ADRX			20	01	31		CONNECTOR MPU UNIT	J01
			20	02	31		CONN. TAPE DECK CONTROLLER	J02
			20	03	31		CONN. SERIAL REM. CONTROLLER	J03
			20	04	31		CONN. PERIPHERY CONTROLLER	J04
			20	05	24A		CONNECTOR BUS CONVERTOR	J05
			20	23	18		CONNECTOR COMMAND UNIT	P04
			21	01	18		CONNECTOR TO BASIS BOARD, EL 23	
			21	02	09		CONNECTOR TO DISPLAY BOARD	
			43	01	31		CONN. BASIS BOARD (EL 04)	P01
T-ADRY			20	01	30		CONNECTOR MPU UNIT	J01
			20	02	30		CONN. TAPE DECK CONTROLLER	J02
			20	03	30		CONN. SERIAL REM. CONTROLLER	J03
			20	04	30		CONN. PERIPHERY CONTROLLER	J04
			20	05	23A		CONNECTOR BUS CONVERTOR	J05
			20	23	20		CONNECTOR COMMAND UNIT	P04
			21	01	20		CONNECTOR TO BASIS BOARD, EL 23	
			21	02	10		CONNECTOR TO DISPLAY BOARD	
			43	01	30		CONN. BASIS BOARD (EL 04)	P01
T-ADRZ			20	01	29		CONNECTOR MPU UNIT	J01
			20	02	29		CONN. TAPE DECK CONTROLLER	J02
			20	03	29		CONN. SERIAL REM. CONTROLLER	J03
			20	04	29		CONN. PERIPHERY CONTROLLER	J04
			20	05	22A		CONNECTOR BUS CONVERTOR	J05
			20	23	22		CONNECTOR COMMAND UNIT	P04
			21	01	22		CONNECTOR TO BASIS BOARD, EL 23	
			21	02	13		CONNECTOR TO DISPLAY BOARD	
			43	01	29		CONN. BASIS BOARD (EL 04)	P01
T-BUSSW			20	01	08		CONNECTOR MPU UNIT	J01
			20	03	15		CONN. SERIAL REM. CONTROLLER	J03
T-CAPON			20	02	23		CONN. TAPE DECK CONTROLLER	J02
			20	21	13		CONN. CAPSTAN CONTROL UNIT	P02
			26	01	13		FROM GR 20, EL 21	
T-CLK1			20	02	01		CONN. TAPE DECK CONTROLLER	J02
			20	20	15		CONN. SPOOLING MOTOR CONTR.	P01
			20	24	03		CONN. TO BUS CONNECTOR BOARD	J17
			23	02	17		FROM GR 25, EL 02	
			24	01	15		FROM GR 20, EL 20	
			24	03	13		CONN. TAPE TENS. UNIT, RIGHT	J03
			25	02	17		CONN. REMOTE CONTROL	P02
			28	01	13		FROM GR 24, EL 03	J01
	1	N	28	04	03		CONN. MOVE SENSOR	J03
	1	U	28	05	03		MOVE SENSOR	WIRE FIELD

SIG.NAME	COLOR	TYPE	GR	EL	PT	S	DESCRIPTION OF ELEMENT	
T-CLK2			20	02	02		CONN. TAPE DECK CONTROLLER	J02
			20	20	16		CONN. SPOOLING MOTOR CONTR.	P01
			24	01	16		FROM GR 20, EL 20	
			24	03	14		CONN. TAPE TENS. UNIT, RIGHT	J03
			28	01	14		FROM GR 24, EL 03	J01
	3	N	28	04	04		CONN. MOVE SENSOR	J03
	3	U	28	05	04		MOVE SENSOR	WIRE FIELD
T-CTS			20	03	14		CONN. SERIAL REM. CONTROLLER	J03
T-CUSTR			20	01	23		CONNECTOR MPU UNIT	J01
			20	03	23		CONN. SERIAL REM. CONTROLLER	J03
			20	23	34		CONNECTOR COMMAND UNIT	P04
			21	01	34		CONNECTOR TO BASIS BOARD, EL 23	
			21	02	11		CONNECTOR TO DISPLAY BOARD	
T-DATA0			20	01	39		CONNECTOR MPU UNIT	J01
			20	02	39		CONN. TAPE DECK CONTROLLER	J02
			20	03	39		CONN. SERIAL REM. CONTROLLER	J03
			20	04	39		CONN. PERIPHERY CONTROLLER	J04
			20	05	32A		CONNECTOR BUS CONVERTOR	J05
			20	23	02		CONNECTOR COMMAND UNIT	P04
			21	01	02		CONNECTOR TO BASIS BOARD, EL 23	
			21	02	01		CONNECTOR TO DISPLAY BOARD	
			43	01	39		CONN. BASIS BOARD (EL 04)	P01
T-DATA1			20	01	38		CONNECTOR MPU UNIT	J01
			20	02	38		CONN. TAPE DECK CONTROLLER	J02
			20	03	38		CONN. SERIAL REM. CONTROLLER	J03
			20	04	38		CONN. PERIPHERY CONTROLLER	J04
			20	05	31A		CONNECTOR BUS CONVERTOR	J05
			20	23	04		CONNECTOR COMMAND UNIT	P04
			21	01	04		CONNECTOR TO BASIS BOARD, EL 23	
			21	02	02		CONNECTOR TO DISPLAY BOARD	
			43	01	38		CONN. BASIS BOARD (EL 04)	P01
T-DATA2			20	01	37		CONNECTOR MPU UNIT	J01
			20	02	37		CONN. TAPE DECK CONTROLLER	J02
			20	03	37		CONN. SERIAL REM. CONTROLLER	J03
			20	04	37		CONN. PERIPHERY CONTROLLER	J04
			20	05	30A		CONNECTOR BUS CONVERTOR	J05
			20	23	06		CONNECTOR COMMAND UNIT	P04
			21	01	06		CONNECTOR TO BASIS BOARD, EL 23	
			21	02	03		CONNECTOR TO DISPLAY BOARD	
			43	01	37		CONN. BASIS BOARD (EL 04)	P01
T-DATA3			20	01	36		CONNECTOR MPU UNIT	J01
			20	02	36		CONN. TAPE DECK CONTROLLER	J02
			20	03	36		CONN. SERIAL REM. CONTROLLER	J03
			20	04	36		CONN. PERIPHERY CONTROLLER	J04
			20	05	29A		CONNECTOR BUS CONVERTOR	J05
			20	23	08		CONNECTOR COMMAND UNIT	P04
			21	01	08		CONNECTOR TO BASIS BOARD, EL 23	
			21	02	04		CONNECTOR TO DISPLAY BOARD	
			43	01	36		CONN. BASIS BOARD (EL 04)	P01

SIG.NAME	COLOR	TYPE	GR	EL	PT	S	DESCRIPTION OF ELEMENT	
T-DATA4			20	01	35		CONNECTOR MPU UNIT	J01
			20	02	35		CONN. TAPE DECK CONTROLLER	J02
			20	03	35		CONN. SERIAL REM. CONTROLLER	J03
			20	04	35		CONN. PERIPHERY CONTROLLER	J04
			20	05	28A		CONNECTOR BUS CONVERTOR	J05
			20	23	10		CONNECTOR COMMAND UNIT	P04
			21	01	10		CONNECTOR TO BASIS BOARD, EL 23	
			21	02	05		CONNECTOR TO DISPLAY BOARD	
			43	01	35		CONN. BASIS BOARD (EL 04)	P01
T-DATA5			20	01	34		CONNECTOR MPU UNIT	J01
			20	02	34		CONN. TAPE DECK CONTROLLER	J02
			20	03	34		CONN. SERIAL REM. CONTROLLER	J03
			20	04	34		CONN. PERIPHERY CONTROLLER	J04
			20	05	27A		CONNECTOR BUS CONVERTOR	J05
			20	23	12		CONNECTOR COMMAND UNIT	P04
			21	01	12		CONNECTOR TO BASIS BOARD, EL 23	
			21	02	06		CONNECTOR TO DISPLAY BOARD	
			43	01	34		CONN. BASIS BOARD (EL 04)	P01
T-DATA6			20	01	33		CONNECTOR MPU UNIT	J01
			20	02	33		CONN. TAPE DECK CONTROLLER	J02
			20	03	33		CONN. SERIAL REM. CONTROLLER	J03
			20	04	33		CONN. PERIPHERY CONTROLLER	J04
			20	05	26A		CONNECTOR BUS CONVERTOR	J05
			20	23	14		CONNECTOR COMMAND UNIT	P04
			21	01	14		CONNECTOR TO BASIS BOARD, EL 23	
			21	02	07		CONNECTOR TO DISPLAY BOARD	
			43	01	33		CONN. BASIS BOARD (EL 04)	P01
T-DATA7			20	01	32		CONNECTOR MPU UNIT	J01
			20	02	32		CONN. TAPE DECK CONTROLLER	J02
			20	03	32		CONN. SERIAL REM. CONTROLLER	J03
			20	04	32		CONN. PERIPHERY CONTROLLER	J04
			20	05	25A		CONNECTOR BUS CONVERTOR	J05
			20	23	16		CONNECTOR COMMAND UNIT	P04
			21	01	16		CONNECTOR TO BASIS BOARD, EL 23	
			21	02	08		CONNECTOR TO DISPLAY BOARD	
			43	01	32		CONN. BASIS BOARD (EL 04)	P01
T-DIR			20	02	05		CONN. TAPE DECK CONTROLLER	J02
			20	24	02		CONN. TO BUS CONNECTOR BOARD	J17
			23	02	16		FROM GR 25, EL 02	
			25	02	16		CONN. REMOTE CONTROL	P02
T-DRVENB			20	01	12		CONNECTOR MPU UNIT	J01
			20	03	12		CONN. SERIAL REM. CONTROLLER	J03
T-DT-CH1			20	04	06		CONN. PERIPHERY CONTROLLER	J04
			20	24	11		CONN. TO BUS CONNECTOR BOARD	J17
			25	01	12		CONN. VU-METER PANEL EXT.	P01
			25	03	12		CONNECTOR COMMANDS CH1	P03
			33	01	19		FROM GR 25, EL 01	J01
			39	12	12		FROM GR 25, EL 03	
			43	01	06		CONN. BASIS BOARD (EL 04)	P01
			45	02	12		FROM GR 25, EL 01	J02

./.

SIG.NAME	COLOR	TYPE	GR	EL	PT	S	DESCRIPTION OF ELEMENT	
(CONT.)			90	01	12		FROM GR 33, EL 01	
			90	02	12		CONNECTOR NOISE REDUCTION	P01
			90	03	12		RESERVE	P02
			90	06	12		CONNECTOR COMMANDS CH 01	P05
T-DT-CH2			20	04	07		CONN. PERIPHERY CONTROLLER	J04
			20	24	12		CONN. TO BUS CONNECTOR BOARD	J17
			25	01	13		CONN. VU-METER PANEL EXT.	P01
			25	04	12		CONNECTOR COMMANDS CH2	P04
			33	01	07		FROM GR 25, EL 01	J01
			40	12	12		FROM GR 25, EL 04	
			43	01	07		CONN. BASIS BOARD (EL 04)	P01
			45	02	13		FROM GR 25, EL 01	J02
			90	01	13		FROM GR 33, EL 01	
			90	02	13		CONNECTOR NOISE REDUCTION	P01
			90	03	13		RESERVE	P02
			90	07	12		CONNECTOR COMMANDS CH 02	P06
T-DT-CH3			20	04	08		CONN. PERIPHERY CONTROLLER	J04
			20	24	13		CONN. TO BUS CONNECTOR BOARD	J17
			25	01	14		CONN. VU-METER PANEL EXT.	P01
			25	05	12		CONNECTOR COMMANDS CH3	P05
			33	01	20		FROM GR 25, EL 01	J01
			43	01	08		CONN. BASIS BOARD (EL 04)	P01
			44	01	12		FROM GR 25, EL 05	
			45	02	14		FROM GR 25, EL 01	J02
			90	01	14		FROM GR 33, EL 01	
			90	02	14		CONNECTOR NOISE REDUCTION	P01
			90	03	14		RESERVE	P02
			90	05	12		CONNECTOR COMMANDS CH 03	P04
T-DT-MP			20	04	09		CONN. PERIPHERY CONTROLLER	J04
			20	24	14		CONN. TO BUS CONNECTOR BOARD	J17
			25	01	15		CONN. VU-METER PANEL EXT.	P01
			25	06	12		CONN. COMMANDS MASTER PANEL	P06
			25	07	12		CONN. COMM. VARI SPEED PANEL	P07
			33	01	08		FROM GR 25, EL 01	J01
			38	04	12		MASTER CONTROL BOARD	
			42	01	12		FEED CONNECTOR FROM GR 25, EL 07	
			43	01	09		CONN. BASIS BOARD (EL 04)	P01
			45	02	15		FROM GR 25, EL 01	J02
			90	01	15		FROM GR 33, EL 01	
			90	02	15		CONNECTOR NOISE REDUCTION	P01
			90	03	15		RESERVE	P02
			90	04	12		CONN. COMMANDS VARI SPEED	P03
T-DT-RES			20	04	13		CONN. PERIPHERY CONTROLLER	J04
			20	24	18		CONN. TO BUS CONNECTOR BOARD	J17
			43	01	13		CONN. BASIS BOARD (EL 04)	P01
T-DT-RP1			20	04	10		CONN. PERIPHERY CONTROLLER	J04
			20	24	15		CONN. TO BUS CONNECTOR BOARD	J17
			23	02	12		FROM GR 25, EL 02	
			25	02	12		CONN. REMOTE CONTROL	P02
			43	01	10		CONN. BASIS BOARD (EL 04)	P01
T-DT-RP2			20	04	11		CONN. PERIPHERY CONTROLLER	J04
			20	24	16		CONN. TO BUS CONNECTOR BOARD	J17
			23	02	13		FROM GR 25, EL 02	
			25	02	13		CONN. REMOTE CONTROL	P02
			43	01	11		CONN. BASIS BOARD (EL 04)	P01
T-DT-SJM			20	04	12		CONN. PERIPHERY CONTROLLER	J04
			20	24	17		CONN. TO BUS CONNECTOR BOARD	J17
			23	02	14		FROM GR 25, EL 02	
			25	02	14		CONN. REMOTE CONTROL	P02
			43	01	12		CONN. BASIS BOARD (EL 04)	P01
T-ENB			20	01	28		CONNECTOR MPU UNIT	J01
			20	02	28		CONN. TAPE DECK CONTROLLER	J02
			20	03	28		CONN. SERIAL REM. CONTROLLER	J03
			20	04	28		CONN. PERIPHERY CONTROLLER	J04
			20	05	21A		CONNECTOR BUS CONVERTOR	J05
			43	01	28		CONN. BASIS BOARD (EL 04)	P01
T-IRQ			20	01	13		CONNECTOR MPU UNIT	J01
T-LED		1		N	27	02	01	CONN. TAPE END SW LEFT	J02
		1		U	27	04	01	TAPE END SW. LEFT WIRE FIELD
		1		N	28	02	01	CONN. TAPE END SW RIGHT	J02
		1		U	28	06	01	TAPE END SW. RIGHT WIRE FIELD
T-NMI			20	01	09		CONNECTOR MPU UNIT	J01
T-PWRON		1		F	07	01	11	OUTPUT (TO GR 20, EL 31/32)	P01
					20	01	14	CONNECTOR MPU UNIT	J01
		1		U	20	31	12	WIRE FIELD (POWER SUP. +SOLEN.)
T-READSL			20	04	04		CONN. PERIPHERY CONTROLLER	J04
			20	24	09		CONN. TO BUS CONNECTOR BOARD	J17
			23	02	10		FROM GR 25, EL 02	
			25	01	10		CONN. VU-METER PANEL EXT.	P01
			25	02	10		CONN. REMOTE CONTROL	P02
			25	03	10		CONNECTOR COMMANDS CH1	P03
			25	04	10		CONNECTOR COMMANDS CH2	P04
			25	05	10		CONNECTOR COMMANDS CH3	P05
			25	06	10		CONN. COMMANDS MASTER PANEL	P06
			25	07	10		CONN. COMM. VARI SPEED PANEL	P07
			33	01	18		FROM GR 25, EL 01	J01
			38	04	10		MASTER CONTROL BOARD	
			39	12	10		FROM GR 25, EL 03	
			40	12	10		FROM GR 25, EL 04	
			42	01	10		FEED CONNECTOR FROM GR 25, EL 07	
			43	01	04		CONN. BASIS BOARD (EL 04)	P01
			44	01	10		FROM GR 25, EL 05	
			45	02	10		FROM GR 25, EL 01	J02
			90	01	10		FROM GR 33, EL 01	
			90	02	10		CONNECTOR NOISE REDUCTION	P01
			90	03	10		RESERVE	P02
			90	04	10		CONN. COMMANDS VARI SPEED	P03
			90	05	10		CONNECTOR COMMANDS CH 03	P04
			90	06	10		CONNECTOR COMMANDS CH 01	P05

./.

SIG.NAME	COLOR	TYPE	GR	EL	PT	S	DESCRIPTION OF ELEMENT	
(CONT.)			90	07	10		CONNECTOR COMMANDS CH 02	P06
T-REFEXT			20	21	16		CONN. CAPSTAN CONTROL UNIT	P02
			20	24	01		CONN. TO BUS CONNECTOR BOARD	J17
		B	23	01	13		CONN. PARALLEL REMOTE CONTR.	J01
			23	02	15		FROM GR 25, EL 02	
			25	01	23		CONN. VU-METER PANEL EXT.	P01
			25	02	15		CONN. REMOTE CONTROL	P02
			25	06	13		CONN. COMMANDS MASTER PANEL	P06
			25	07	13		CONN. COMM. VARI SPEED PANEL	P07
			26	01	16		FROM GR 20, EL 21	
			33	01	12		FROM GR 25, EL 01	J01
			38	04	13		MASTER CONTROL BOARD	
			42	01	13		FEED CONNECTOR FROM GR 25, EL 07	
			45	02	23		FROM GR 25, EL 01	J02
			90	01	23		FROM GR 33, EL 01	
			90	02	23		CONNECTOR NOISE REDUCTION	P01
			90	03	23		RESERVE	P02
			90	04	13		CONN. COMMANDS VARI SPEED	P03
T-REFINT			20	01	17		CONNECTOR MPU UNIT	J01
			20	21	15		CONN. CAPSTAN CONTROL UNIT	P02
			26	01	15		FROM GR 20, EL 21	
T-REFSEL			20	02	12		CONN. TAPE DECK CONTROLLER	J02
			20	21	11		CONN. CAPSTAN CONTROL UNIT	P02
			26	01	11		FROM GR 20, EL 21	
T-RESET			20	01	26		CONNECTOR MPU UNIT	J01
			20	02	26		CONN. TAPE DECK CONTROLLER	J02
			20	03	26		CONN. SERIAL REM. CONTROLLER	J03
			20	04	26		CONN. PERIPHERY CONTROLLER	J04
			20	05	19A		CONNECTOR BUS CONVERTOR	J05
			43	01	26		CONN. BASIS BOARD (EL 04)	P01
T-RTS			20	03	13		CONN. SERIAL REM. CONTROLLER	J03
T-RVSTR			20	01	15		CONNECTOR MPU UNIT	J01
			20	03	16		CONN. SERIAL REM. CONTROLLER	J03
T-RW			20	01	27		CONNECTOR MPU UNIT	J01
			20	02	27		CONN. TAPE DECK CONTROLLER	J02
			20	03	27		CONN. SERIAL REM. CONTROLLER	J03
			20	04	27		CONN. PERIPHERY CONTROLLER	J04
			20	05	20A		CONNECTOR BUS CONVERTOR	J05
			20	23	26		CONNECTOR COMMAND UNIT	P04
			21	01	26		CONNECTOR TO BASIS BOARD, EL 23	
			43	01	27		CONN. BASIS BOARD (EL 04)	P01
T-RX			20	01	10		CONNECTOR MPU UNIT	J01
			20	03	10		CONN. SERIAL REM. CONTROLLER	J03
T-SADA			20	04	01		CONN. PERIPHERY CONTROLLER	J04
			20	24	06		CONN. TO BUS CONNECTOR BOARD	J17
			23	02	07		FROM GR 25, EL 02	
			25	01	07		CONN. VU-METER PANEL EXT.	P01

./.

SIG.NAME	COLOR	TYPE	GR	EL	PT	S	DESCRIPTION OF ELEMENT	
(CONT.)			25	02	07		CONN. REMOTE CONTROL	P02
			25	03	07		CONNECTOR COMMANDS CH1	P03
			25	04	07		CONNECTOR COMMANDS CH2	P04
			25	05	07		CONNECTOR COMMANDS CH3	P05
			25	06	07		CONN. COMMANDS MASTER PANEL	P06
			25	07	07		CONN. COMM. VARI SPEED PANEL	P07
			33	01	04		FROM GR 25, EL 01	J01
			38	04	07		MASTER CONTROL BOARD	
			39	12	07		FROM GR 25, EL 03	
			40	12	07		FROM GR 25, EL 04	
			42	01	07		FEED CONNECTOR FROM GR 25, EL 07	
			43	01	01		CONN. BASIS BOARD (EL 04)	P01
			44	01	07		FROM GR 25, EL 05	
			45	02	07		FROM GR 25, EL 01	J02
			90	01	07		FROM GR 33, EL 01	
			90	02	07		CONNECTOR NOISE REDUCTION	P01
			90	03	07		RESERVE	P02
			90	04	07		CONN. COMMANDS VARI SPEED	P03
			90	05	07		CONNECTOR COMMANDS CH 03	P04
			90	06	07		CONNECTOR COMMANDS CH 01	P05
			90	07	07		CONNECTOR COMMANDS CH 02	P06
T-SADB			20	04	02		CONN. PERIPHERY CONTROLLER	J04
			20	24	07		CONN. TO BUS CONNECTOR BOARD	J17
			23	02	08		FROM GR 25, EL 02	
			25	01	08		CONN. VU-METER PANEL EXT.	P01
			25	02	08		CONN. REMOTE CONTROL	P02
			25	03	08		CONNECTOR COMMANDS CH1	P03
			25	04	08		CONNECTOR COMMANDS CH2	P04
			25	05	08		CONNECTOR COMMANDS CH3	P05
			25	06	08		CONN. COMMANDS MASTER PANEL	P06
			25	07	08		CONN. COMM. VARI SPEED PANEL	P07
			33	01	17		FROM GR 25, EL 01	J01
			38	04	08		MASTER CONTROL BOARD	
			39	12	08		FROM GR 25, EL 03	
			40	12	08		FROM GR 25, EL 04	
			42	01	08		FEED CONNECTOR FROM GR 25, EL 07	
			43	01	02		CONN. BASIS BOARD (EL 04)	P01
			44	01	08		FROM GR 25, EL 05	
			45	02	08		FROM GR 25, EL 01	J02
			90	01	08		FROM GR 33, EL 01	
			90	02	08		CONNECTOR NOISE REDUCTION	P01
			90	03	08		RESERVE	P02
			90	04	08		CONN. COMMANDS VARI SPEED	P03
			90	05	08		CONNECTOR COMMANDS CH 03	P04
			90	06	08		CONNECTOR COMMANDS CH 01	P05
			90	07	08		CONNECTOR COMMANDS CH 02	P06
T-SADC			20	04	03		CONN. PERIPHERY CONTROLLER	J04
			20	24	08		CONN. TO BUS CONNECTOR BOARD	J17
			23	02	09		FROM GR 25, EL 02	
			25	01	09		CONN. VU-METER PANEL EXT.	P01
			25	02	09		CONN. REMOTE CONTROL	P02
			25	03	09		CONNECTOR COMMANDS CH1	P03
			25	04	09		CONNECTOR COMMANDS CH2	P04
			25	05	09		CONNECTOR COMMANDS CH3	P05

./.

```
*****************************************************************************************************************************
*  S T U D E R   *   S I G N A L   W I R E   L I S T                *  83/02/25 * 08:28      *   P A G E     44    *
*****************************************************************************************************************************
TAPE TRANSPORT & AUDIO CIRCUITS * STUDER A810 *                1.810.090.00              81/01/29

SIG.NAME COLOR TYPE GR EL PT  S DESCRIPTION OF ELEMENT
-------- ----- ---- -- -- --- - -------------------------------
 CONT.)              25 06 09    CONN. COMMANDS MASTER PANEL  P06
                     25 07 09    CONN. COMM. VARI SPEED PANEL P07
                     33 01 05    FROM GR 25, EL 01            J01
                     38 04 09    MASTER CONTROL BOARD
                     39 12 09    FROM GR 25, EL 03
                     40 12 09    FROM GR 25, EL 04
                     42 01 09    FEED CONNECTOR FROM GR 25, EL 07
                     43 01 03    CONN. BASIS BOARD (EL 04)    P01
                     44 01 09    FROM GR 25, EL 05
                     45 02 09    FROM GR 25, EL 01            J02
                     90 01 09    FROM GR 33, EL 01
                     90 02 09    CONNECTOR NOISE REDUCTION    P01
                     90 03 09    RESERVE                      P02
                     90 04 09    CONN. COMMANDS VARI SPEED    P03
                     90 05 09    CONNECTOR COMMANDS CH 03     P04
                     90 06 09    CONNECTOR COMMANDS CH 01     P05
                     90 07 09    CONNECTOR COMMANDS CH 02     P06
T-SL1                21 02 12    CONNECTOR TO DISPLAY BOARD
T-SPDSL1             20 02 10    CONN. TAPE DECK CONTROLLER   J02
                     20 21 09    CONN. CAPSTAN CONTROL UNIT   P02
                     26 01 09    FROM GR 20, EL 21
T-SPDSL2             20 02 11    CONN. TAPE DECK CONTROLLER   J02
                     20 21 10    CONN. CAPSTAN CONTROL UNIT   P02
                     26 01 10    FROM GR 20, EL 21
T-SUPVON 5      F    07 01 12    OUTPUT (TO GR 20, EL 31/32)  P01
                     20 02 06    CONN. TAPE DECK CONTROLLER   J02
         5      U    20 31 09    WIRE FIELD (POWER SUP. +SOLEN.)
T-SYNCAP             20 02 07    CONN. TAPE DECK CONTROLLER   J02
                     20 21 12    CONN. CAPSTAN CONTROL UNIT   P02
                     26 01 12    FROM GR 20, EL 21
T-TCINDL             20 06 01    CONN. CODE WRITE/READ UNIT   J06
                     20 07 01    CONNECTOR CODE DELAY UNIT    J07
T-TCOUDL             20 06 02    CONN. CODE WRITE/READ UNIT   J06
                     20 07 02    CONNECTOR CODE DELAY UNIT    J07
T-TCPRES             20 06 14    CONN. CODE WRITE/READ UNIT   J06
                     20 07 14    CONNECTOR CODE DELAY UNIT    J07
T-TDSTR              20 01 24    CONNECTOR MPU UNIT           J01
                     20 02 25    CONN. TAPE DECK CONTROLLER   J02
                     20 03 24    CONN. SERIAL REM. CONTROLLER J03
T-TENDL              20 02 03    CONN. TAPE DECK CONTROLLER   J02
                     20 20 13    CONN. SPOOLING MOTOR CONTR.  P01
                     24 01 13    FROM GR 20, EL 20
                     24 02 12    CONN. TAPE TENS. UNIT, LEFT  J02
                     27 01 12    FROM GR 24, EL 02            J01
T-TENDR              20 02 04    CONN. TAPE DECK CONTROLLER   J02
                                                              ./.

SIG.NAME COLOR TYPE GR EL PT  S DESCRIPTION OF ELEMENT
-------- ----- ---- -- -- --- - -------------------------------
(CONT.)              20 20 14    CONN. SPOOLING MOTOR CONTR.  P01
                     24 01 14    FROM GR 20, EL 20
                     24 03 12    CONN. TAPE TENS. UNIT, RIGHT J03
                     28 01 12    FROM GR 24, EL 03            J01
T-TNDL   4      N    27 02 03    CONN. TAPE END SW LEFT       J02
         4      U    27 04 03    TAPE END SW. LEFT      WIRE FIELD
T-TNDR   4      N    28 02 03    CONN. TAPE END SW RIGHT      J02
         4      U    28 06 03    TAPE END SW. RIGHT     WIRE FIELD
T-TPSPD1             20 02 08    CONN. TAPE DECK CONTROLLER   J02
                     20 20 09    CONN. SPOOLING MOTOR CONTR.  P01
                     24 01 09    FROM GR 20, EL 20
T-TPSPD2             20 02 09    CONN. TAPE DECK CONTROLLER   J02
                     20 20 10    CONN. SPOOLING MOTOR CONTR.  P01
                     24 01 10    FROM GR 20, EL 20
T-TX                 20 01 11    CONNECTOR MPU UNIT           J01
                     20 03 11    CONN. SERIAL REM. CONTROLLER J03
T-VARSPD             25 01 21    CONN. VU-METER PANEL EXT.    P01
                     25 06 15    CONN. COMMANDS MASTER PANEL  P06
                     25 07 15    CONN. COMM. VARI SPEED PANEL P07
                     33 01 11    FROM GR 25, EL 01            J01
                     38 04 15    MASTER CONTROL BOARD
                     42 01 15    FEED CONNECTOR FROM GR 25, EL 07
                     45 02 21    FROM GR 25, EL 01            J02
                     90 01 21    FROM GR 33, EL 01
                     90 02 21    CONNECTOR NOISE REDUCTION    P01
                     90 03 21    RESERVE                      P02
                     90 04 15    CONN. COMMANDS VARI SPEED    P03
T-WRTSL              20 04 05    CONN. PERIPHERY CONTROLLER   J04
                     20 24 10    CONN. TO BUS CONNECTOR BOARD J17
                     23 02 11    FROM GR 25, EL 02
                     25 01 11    CONN. VU-METER PANEL EXT.    P01
                     25 02 11    CONN. REMOTE CONTROL         P02
                     25 03 11    CONNECTOR COMMANDS CH1       P03
                     25 04 11    CONNECTOR COMMANDS CH2       P04
                     25 05 11    CONNECTOR COMMANDS CH3       P05
                     25 06 11    CONN. COMMANDS MASTER PANEL  P06
                     25 07 11    CONN. COMM. VARI SPEED PANEL P07
                     33 01 06    FROM GR 25, EL 01            J01
                     38 04 11    MASTER CONTROL BOARD
                     39 12 11    FROM GR 25, EL 03
                     40 12 11    FROM GR 25, EL 04
                     42 01 11    FEED CONNECTOR FROM GR 25, EL 07
                     43 01 05    CONN. BASIS BOARD (EL 04)    P01
                     44 01 11    FROM GR 25, EL 05
                     45 02 11    FROM GR 25, EL 01            J02
                     90 01 11    FROM GR 33, EL 01
                     90 02 11    CONNECTOR NOISE REDUCTION    P01
                     90 03 11    RESERVE                      P02
                     90 04 11    CONN. COMMANDS VARI SPEED    P03
                                                              ./.

*****************************************************************************************************************************
*  S T U D E R   *   S I G N A L   W I R E   L I S T                *  83/02/25 * 08:28      *   P A G E     45    *
*****************************************************************************************************************************
TAPE TRANSPORT & AUDIO CIRCUITS * STUDER A810 *                1.810.090.00              81/01/29

SIG.NAME COLOR TYPE GR EL PT  S DESCRIPTION OF ELEMENT
-------- ----- ---- -- -- --- - -------------------------------
(CONT.)              90 05 11    CONNECTOR COMMANDS CH 03     P04
                     90 06 11    CONNECTOR COMMANDS CH 01     P05
                     90 07 11    CONNECTOR COMMANDS CH 02     P06
TA-ACTMO             20 05 06B   CONNECTOR BUS CONVERTOR      J05
                     20 12 20    CONNECTOR MONO-STEREO-SWITCH J12
TA-ACTTC             20 05 08B   CONNECTOR BUS CONVERTOR      J05
                     20 06 20    CONN. CODE WRITE/READ UNIT   J06
                     20 07 20    CONNECTOR CODE DELAY UNIT    J07
TA-ACTO1             20 05 07B   CONNECTOR BUS CONVERTOR      J05
                     20 08 20    CONNECTOR HF-DRIVER, CH 1    J08
                     20 09 20    CONN. RECORD AMPLIFIER, CH 1 J09
                     20 10 20    CONN. REPRODUCE AMPL., CH 1  J10
                     20 11 20    CONN. LINE AMPLIFIER, CH 1   J11
TA-ACTO2             20 05 09B   CONNECTOR BUS CONVERTOR      J05
                     20 13 20    CONNECTOR HF-DRIVER, CH 2    J13
                     20 14 20    CONN. RECORD AMPLIFIER, CH 2 J14
                     20 15 20    CONN. REPRODUCE AMPL., CH 2  J15
                     20 16 20    CONN. LINE AMPLIFIER, CH 2   J16
TA-CLK               20 01 22    CONNECTOR MPU UNIT           J01
                     20 05 19B   CONNECTOR BUS CONVERTOR      J05
                     20 06 25    CONN. CODE WRITE/READ UNIT   J06
                     20 07 25    CONNECTOR CODE DELAY UNIT    J07
                     20 08 25    CONNECTOR HF-DRIVER, CH 1    J08
                     20 09 25    CONN. RECORD AMPLIFIER, CH 1 J09
                     20 10 25    CONN. REPRODUCE AMPL., CH 1  J10
                     20 11 25    CONN. LINE AMPLIFIER, CH 1   J11
                     20 12 25    CONNECTOR MONO-STEREO-SWITCH J12
                     20 13 25    CONNECTOR HF-DRIVER, CH 2    J13
                     20 14 25    CONN. RECORD AMPLIFIER, CH 2 J14
                     20 15 25    CONN. REPRODUCE AMPL., CH 2  J15
                     20 16 25    CONN. LINE AMPLIFIER, CH 2   J16
TAPAD-01             20 11 10    CONN. LINE AMPLIFIER, CH 1   J11
         6      N    20 26 08    CONN. TO VU-METER PANEL, CH1 J19
         6      A    34 01 14    FROM GR 20, EL 26+27         P01
         6      U    39 01 14    CALIBRATION BOARD
         6      N    90 09 08    CONN. VU-METER CH 1, AUDIO   J01
TAPAD-02             20 16 10    CONN. LINE AMPLIFIER, CH 2   J16
         6      N    20 27 08    CONN. TO VU-METER PANEL, CH2 J20
         6      A    34 01 21    FROM GR 20, EL 26+27         P01
         6      U    40 01 14    CALIBRATION BOARD
         6      N    90 10 08    CONN. VU-METER CH 2, AUDIO   J02
TAPAU-01 2      U    39 01 20    CALIBRATION BOARD
         2      L    39 04 02    POTENTIOMETER REPRODUCE-LEVEL
TAPAU-02 2      U    40 01 20    CALIBRATION BOARD
         2      L    40 04 02    POTENTIOMETER REPRODUCE-LEVEL
TAPDI-01             20 10 10    CONN. REPRODUCE AMPL., CH 1  J10
                                                              ./.

SIG.NAME COLOR TYPE GR EL PT  S DESCRIPTION OF ELEMENT
-------- ----- ---- -- -- --- - -------------------------------
(CONT.)              20 11 12    CONN. LINE AMPLIFIER, CH 1   J11
                     20 12 09    CONNECTOR MONO-STEREO-SWITCH J12
TAPDI-02             20 12 11    CONNECTOR MONO-STEREO-SWITCH J12
                     20 15 10    CONN. REPRODUCE AMPL., CH 2  J15
                     20 16 12    CONN. LINE AMPLIFIER, CH 2   J16
TAPLI-01             20 10 01    CONN. REPRODUCE AMPL., CH 1  J10
TAPLI-02             20 15 01    CONN. REPRODUCE AMPL., CH 2  J15
TAPMS-01             20 11 11    CONN. LINE AMPLIFIER, CH 1   J11
                     20 12 07    CONNECTOR MONO-STEREO-SWITCH J12
         0      N    20 26 09    CONN. TO VU-METER PANEL, CH1 J19
         0      A    34 01 01    FROM GR 20, EL 26+27         P01
         0      U    39 01 15    CALIBRATION BOARD
         1      U    39 01 16    CALIBRATION BOARD
         1      L    39 04 01    POTENTIOMETER REPRODUCE-LEVEL
         0      N    90 09 09    CONN. VU-METER CH 1, AUDIO   J01
                     90 11 14    CONNECTOR MONITOR AMPLIFIER  P07
                     91 03 14    FROM GR 90, EL 11
TAPMS-02             20 12 05    CONNECTOR MONO-STEREO-SWITCH J12
                     20 16 11    CONN. LINE AMPLIFIER, CH 2   J16
         0      N    20 27 09    CONN. TO VU-METER PANEL, CH2 J20
         0      A    34 01 08    FROM GR 20, EL 26+27         P01
         0      U    40 01 15    CALIBRATION BOARD
         1      U    40 01 16    CALIBRATION BOARD
         1      L    40 04 01    POTENTIOMETER REPRODUCE-LEVEL
         0      N    90 10 09    CONN. VU-METER CH 2, AUDIO   J02
                     90 11 07    CONNECTOR MONITOR AMPLIFIER  P07
                     91 03 07    FROM GR 90, EL 11
TD-CLK               20 01 16    CONNECTOR MPU UNIT           J01
                     20 20 08    CONN. SPOOLING MOTOR CONTR.  P01
                     24 01 08    FROM GR 20, EL 20
TO-CLK          B    23 01 07    CONN. PARALLEL REMOTE CONTR. J01
TO-DIR          B    23 01 10    CONN. PARALLEL REMOTE CONTR. J01
TS-CH1               43 02 09    PERIPHERY CONTROLLER BOARD   P02
                     43 03 09    KEY BOARD
TS-CH2               43 02 10    PERIPHERY CONTROLLER BOARD   P02
                     43 03 10    KEY BOARD
TS-DWN               43 02 12    PERIPHERY CONTROLLER BOARD   P02
                     43 03 12    KEY BOARD
TS-STO               43 02 13    PERIPHERY CONTROLLER BOARD   P02
                     43 03 13    KEY BOARD
TS-UP                43 02 11    PERIPHERY CONTROLLER BOARD   P02
                     43 03 11    KEY BOARD
```

```
*****************************************************************************************************************************
*  S T U D E R  *   S I G N A L   W I R E   L I S T          *   83/02/25 * 08:28     *  P A G E    46    *
*****************************************************************************************************************************
TAPE TRANSPORT & AUDIO CIRCUITS * STUDER A810 *              1.810.090.00            81/01/29
```

SIG.NAME	COLOR	TYPE	GR	EL	PT	S	DESCRIPTION OF ELEMENT	
TSRC-BIA			43	02	19		PERIPHERY CONTROLLER BOARD	P02
			43	03	19		KEY BOARD	
TSRC-LVL			43	02	17		PERIPHERY CONTROLLER BOARD	P02
			43	03	17		KEY BOARD	
TSRC-TRB			43	02	18		PERIPHERY CONTROLLER BOARD	P02
			43	03	18		KEY BOARD	
TSRP-BAS			43	02	16		PERIPHERY CONTROLLER BOARD	P02
			43	03	16		KEY BOARD	
TSRP-LVL			43	02	14		PERIPHERY CONTROLLER BOARD	P02
			43	03	14		KEY BOARD	
TSRP-TRB			43	02	15		PERIPHERY CONTROLLER BOARD	P02
			43	03	15		KEY BOARD	
VU-A-01	2	L	39	21	01		VU-METER AMPLIFIER BOARD	
VU-A-02	2	L	40	21	01		VU-METER AMPLIFIER BOARD	
VU-B-01	0	L	39	21	02		VU-METER AMPLIFIER BOARD	
VU-B-02	0	L	40	21	02		VU-METER AMPLIFIER BOARD	
0.0 VCU			20	23	01		CONNECTOR COMMAND UNIT	P04
			20	23	03		CONNECTOR COMMAND UNIT	P04
			20	23	05		CONNECTOR COMMAND UNIT	P04
			20	23	07		CONNECTOR COMMAND UNIT	P04
			20	23	09		CONNECTOR COMMAND UNIT	P04
			20	23	11		CONNECTOR COMMAND UNIT	P04
			20	23	13		CONNECTOR COMMAND UNIT	P04
			20	23	15		CONNECTOR COMMAND UNIT	P04
			20	23	17		CONNECTOR COMMAND UNIT	P04
			20	23	19		CONNECTOR COMMAND UNIT	P04
			20	23	21		CONNECTOR COMMAND UNIT	P04
			20	23	23		CONNECTOR COMMAND UNIT	P04
			20	23	25		CONNECTOR COMMAND UNIT	P04
			20	23	27		CONNECTOR COMMAND UNIT	P04
			20	23	29		CONNECTOR COMMAND UNIT	P04
			20	23	31		CONNECTOR COMMAND UNIT	P04
			20	23	33		CONNECTOR COMMAND UNIT	P04
			20	23	35		CONNECTOR COMMAND UNIT	P04
			21	01	01		CONNECTOR TO BASIS BOARD, EL 23	
			21	01	03		CONNECTOR TO BASIS BOARD, EL 23	
			21	01	05		CONNECTOR TO BASIS BOARD, EL 23	
			21	01	07		CONNECTOR TO BASIS BOARD, EL 23	
			21	01	09		CONNECTOR TO BASIS BOARD, EL 23	
			21	01	11		CONNECTOR TO BASIS BOARD, EL 23	
			21	01	13		CONNECTOR TO BASIS BOARD, EL 23	
			21	01	15		CONNECTOR TO BASIS BOARD, EL 23	
			21	01	17		CONNECTOR TO BASIS BOARD, EL 23	
			21	01	19		CONNECTOR TO BASIS BOARD, EL 23	
			21	01	21		CONNECTOR TO BASIS BOARD, EL 23	
			21	01	23		CONNECTOR TO BASIS BOARD, EL 23	

./.

SIG.NAME	COLOR	TYPE	GR	EL	PT	S	DESCRIPTION OF ELEMENT
(CONT.)			21	01	25		CONNECTOR TO BASIS BOARD, EL 23
			21	01	27		CONNECTOR TO BASIS BOARD, EL 23
			21	01	33		CONNECTOR TO BASIS BOARD, EL 23
			21	01	35		CONNECTOR TO BASIS BOARD, EL 23
Q-TACHO	9	Y	26	03	05		CONNECTOR CAPSTAN MOTOR
	9		26	06	05		CAPACITIVE SENSOR

BLOCK DIAGRAM A810

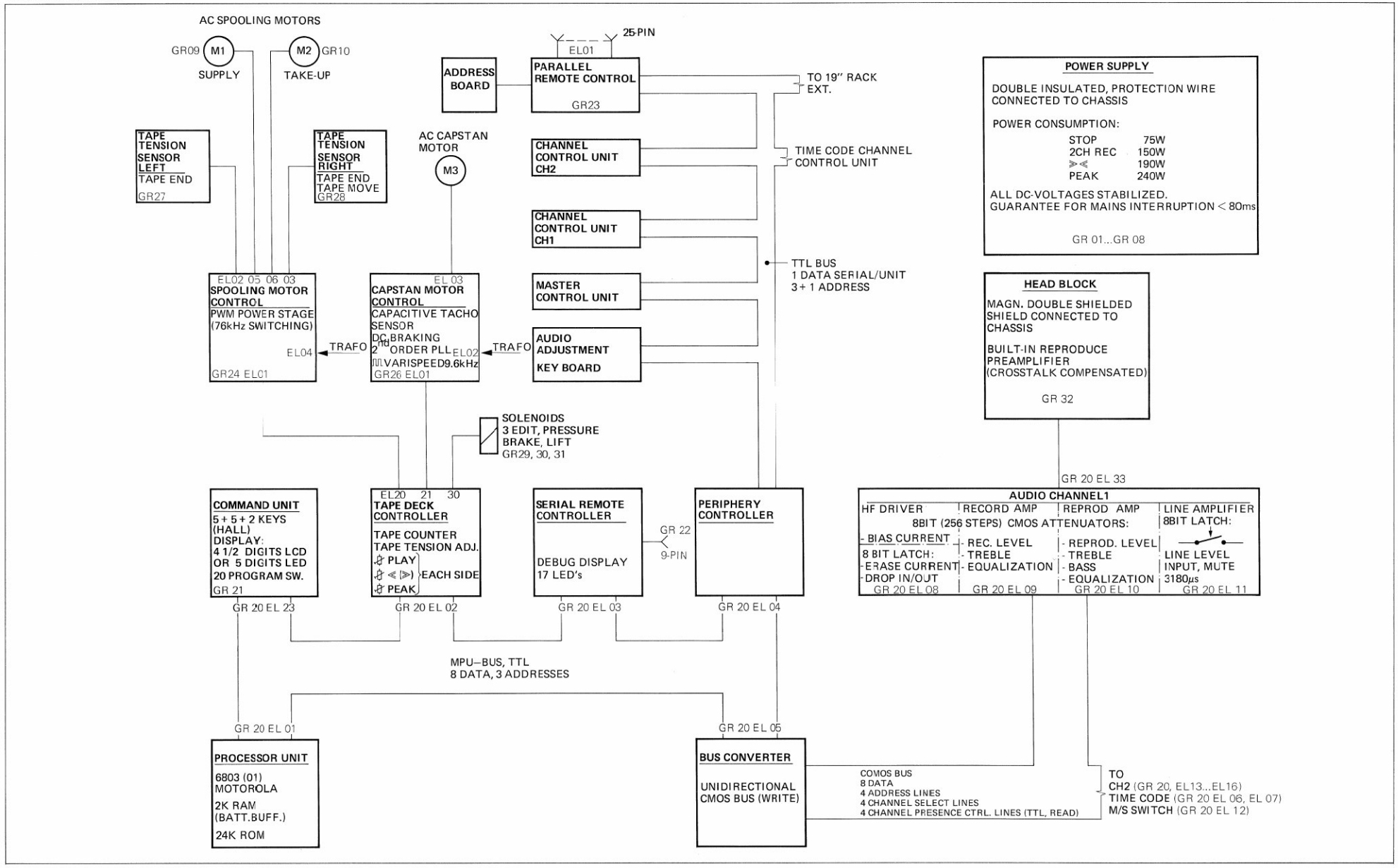

SURVEY OF GROUPS

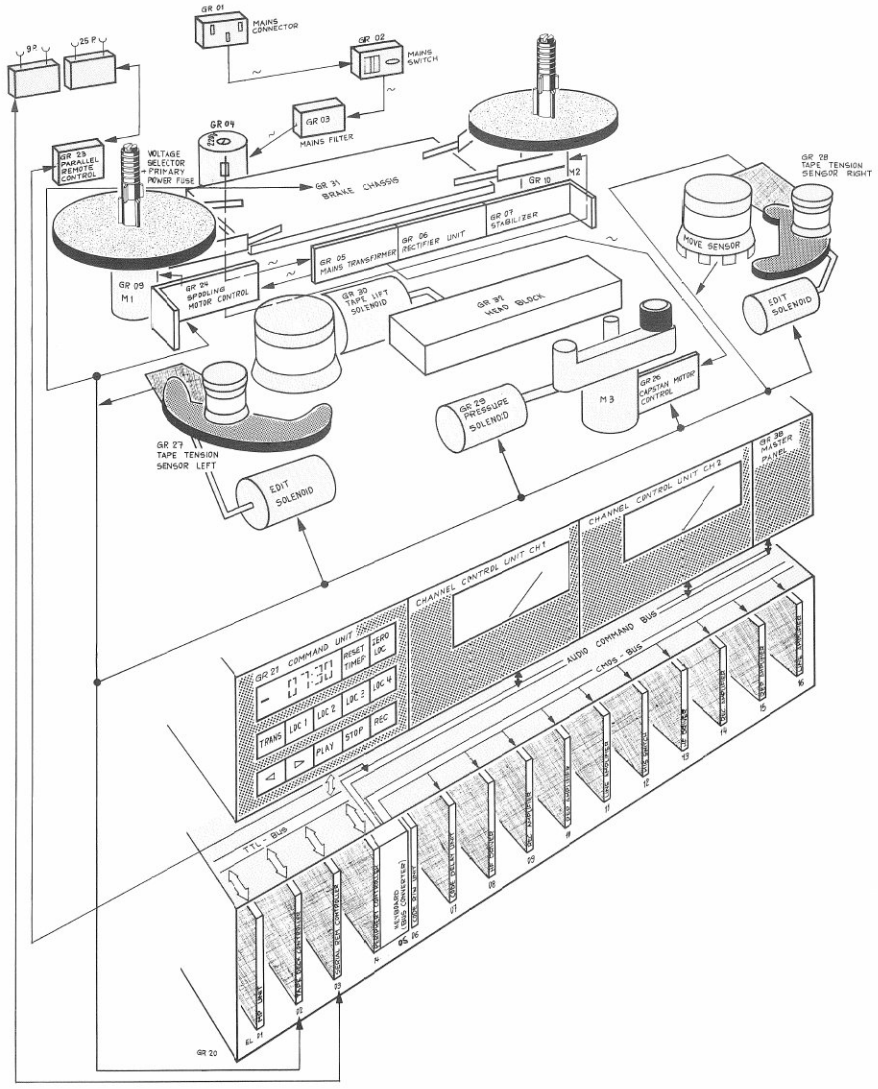

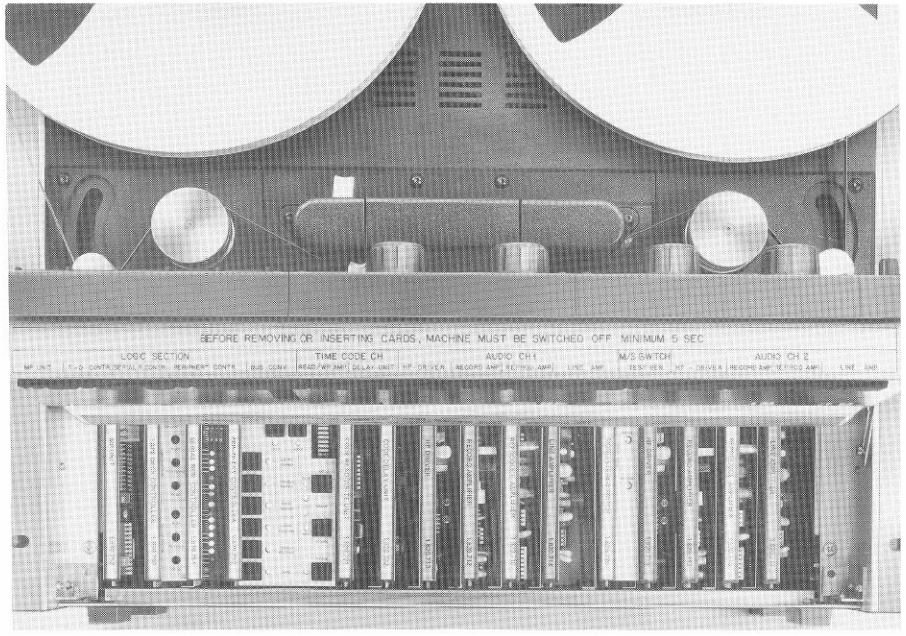

POWER SUPPLY 1.810.210 GR5 MAINS TRANSFORMER

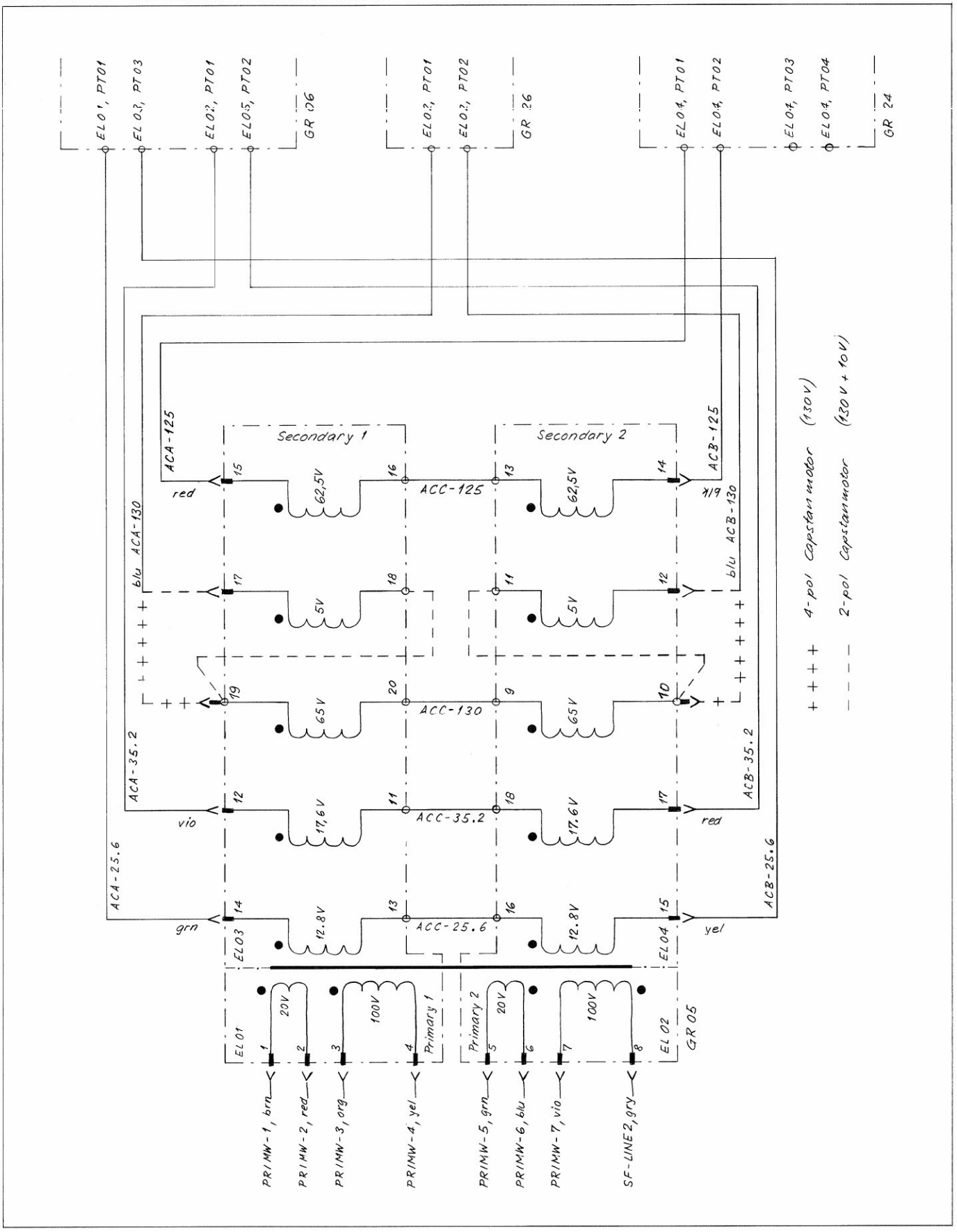

POWER SUPPLY 1.810.210 GR1...4 MAINS INPUT UNIT

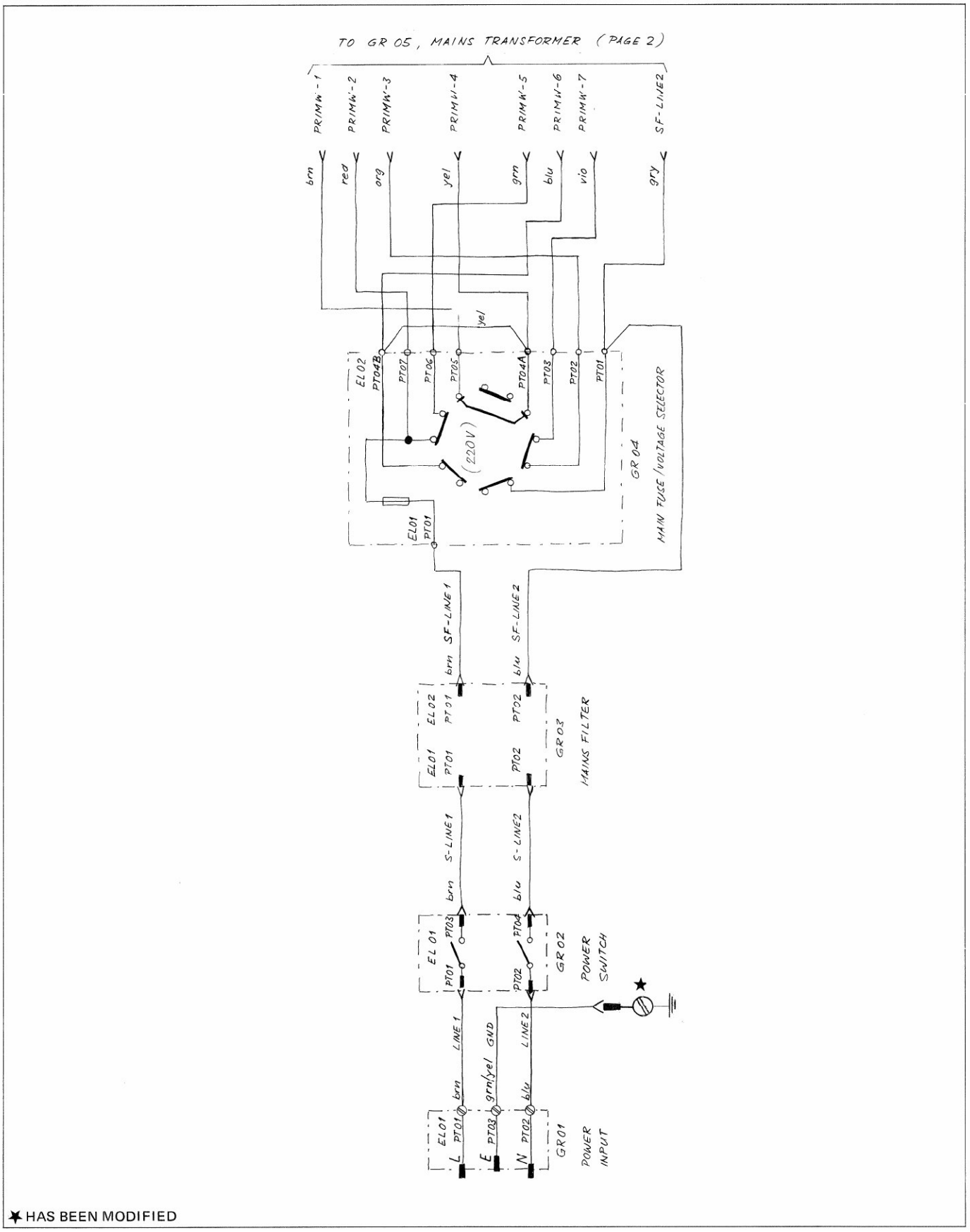

✶ HAS BEEN MODIFIED

POWER SUPPLY 1.810.210–00 GR6 RECTIFIER UNIT

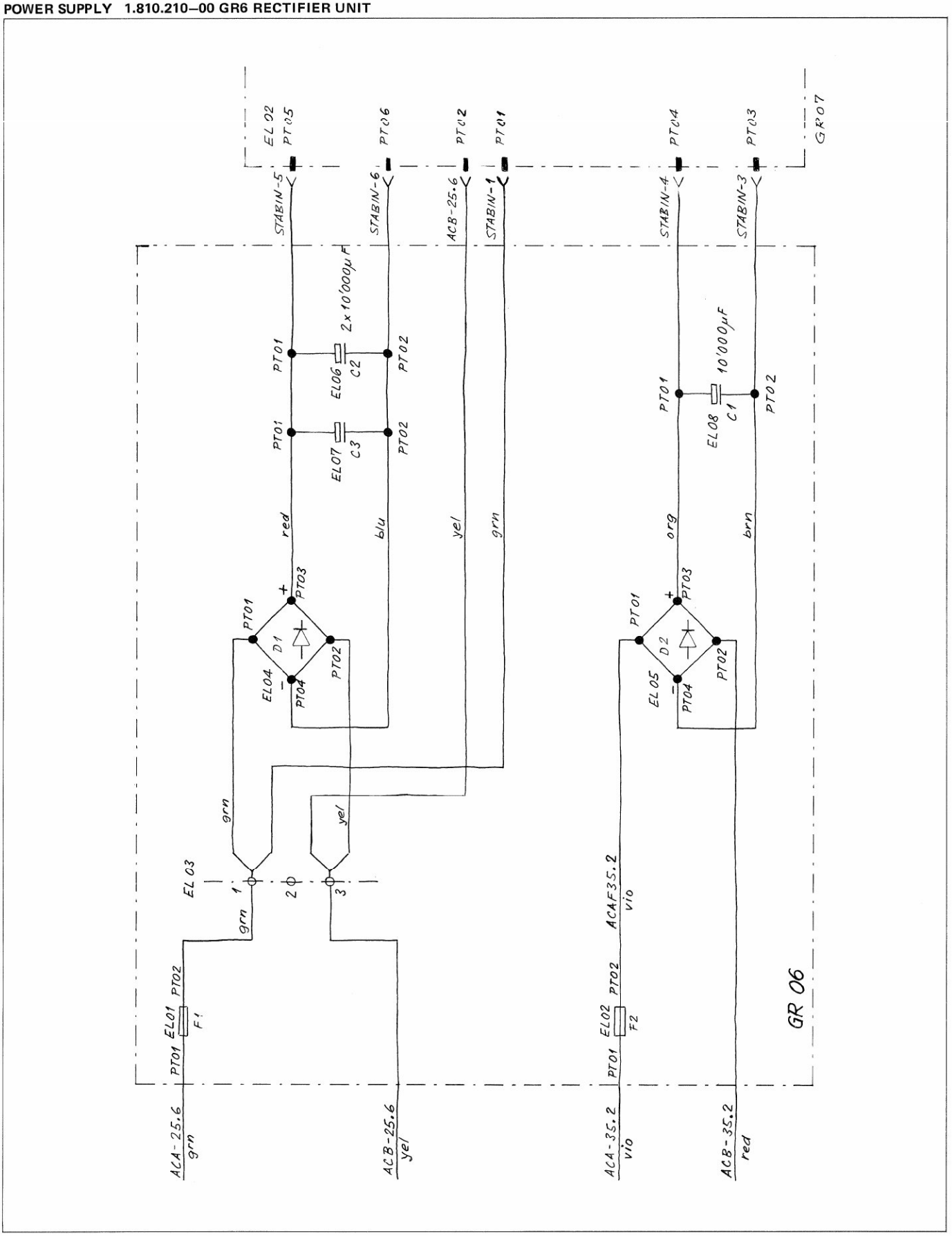

STABILIZER PCB 1.810.770–00 GR7

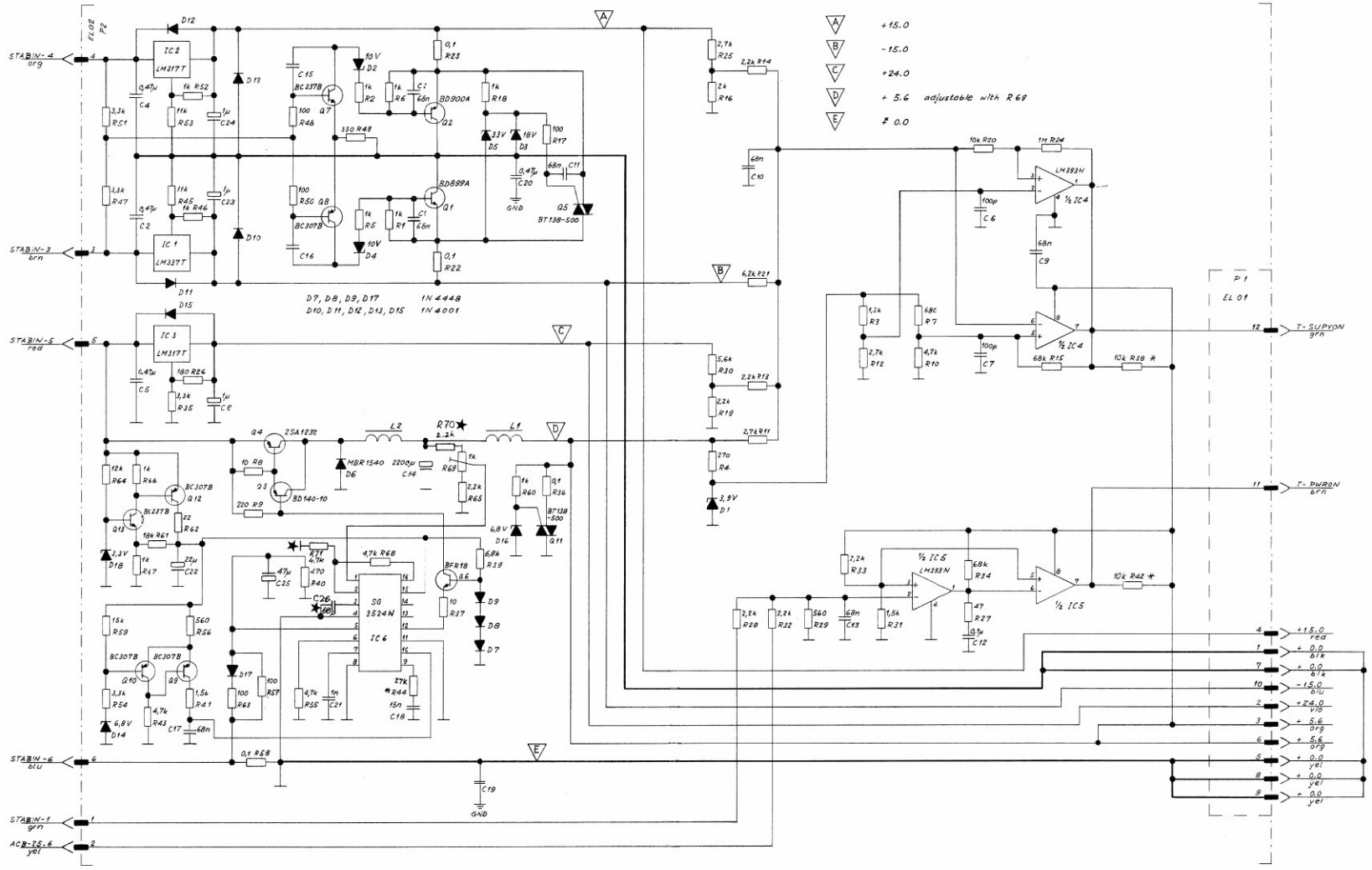

✶ HAS BEEN MODIFIED

STABILIZER PCB 1.810.770–00 GR7

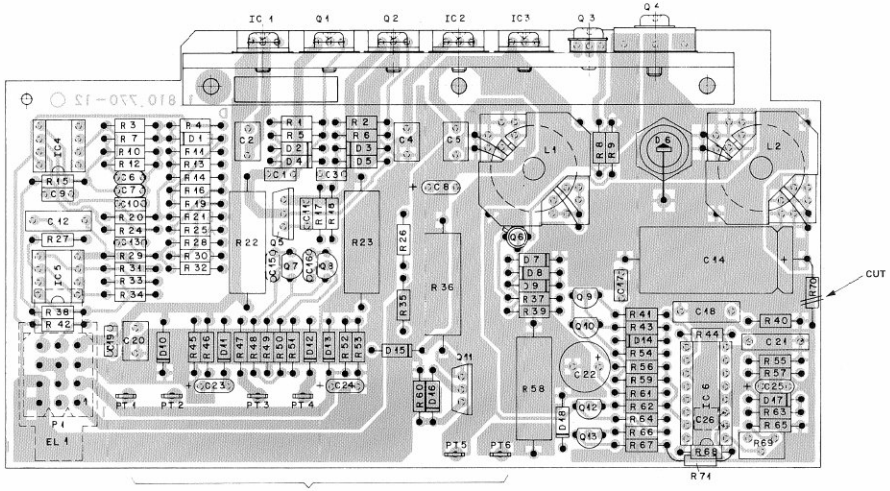

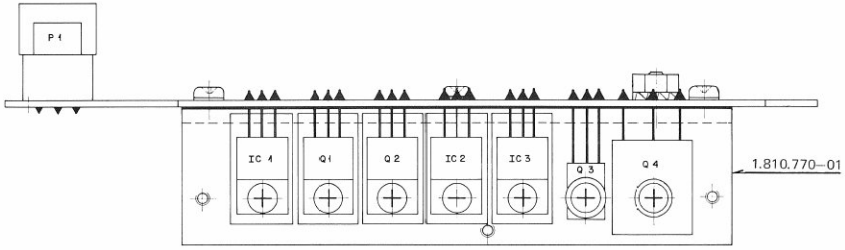

IND.	POS.NO.	PART NO.	VALUE	SPECIFICATIONS / EQUIVALENT	MANUF.
	C..0001	59.99.0205	68 nF	Ce	
	C..0002	59.06.5474	0.47 uF 5%		
	C..0003	59.99.0205	68 nF	Ce	
	C..0004	59.06.5474	0.47 uF 5%		
	C..0005	59.06.5474	0.47 uF 5%		
	C..0006	59.34.4101	100 pF	Ce	
	C..0007	59.34.4101	100 pF	Ce	
	C..0008	59.26.9109	1 uF	40V, Sal	Ph
	C..0009	59.99.0205	68 nF	Ce	
	C..0010	59.99.0205	68 nF	Ce	
	C..0011	59.99.0205	68 nF	Ce	
	C..0012	59.02.2104	0.1 uF 5%		
	C..0013	59.99.0205	68 nF	Ce	
	C..0014	59.25.1222	2200 uF	35V, El	
	C..0015		not used		
	C..0016		not used		
	C..0017	59.99.0205	68 nF	Ce	
	C..0018	59.11.3153	15 nF 5%		
	C..0019		not used		
	C..0020	59.06.5474	0.47 uF 5%		
	C..0021	59.11.6102	1 nF 5%		
	C..0022	59.22.6225	22 uF	63V, El	
	C..0023	59.26.9109	1 uF	25V, Sal	Ph
	C..0024	59.26.9109	1 uF	25V, Sal	Ph
	C..0025	59.26.3478	47 uF 20%	35V, Sal	Ph
(02)	C..0026	59.99.0217	68 pF	Ce	
	D..0001	50.04.1101	3.9 V Z	BZX83C 3.9, BZX55C 3.9, ZPD 3.9	ITT,Ses
	D..0002	50.04.1114	10 V Z	BZX83C 10, BZX55C 10, ZPD 10	ITT,Ses
	D..0003	50.04.1122	18 V Z	BZX83C 18, BZX55C 18, ZPD 18	ITT,Ses
	D..0004	50.04.1114	10 V Z	BZX83C 10, BZX55C 10, ZPD 10	ITT,Ses
	D..0005	50.04.1127	33 V Z	BZX83C 33, BZX55C 33, ZPD 33	ITT,Ses
	D..0006	50.04.0511	MDR1540	VSC1540, S1554	Mot,Vas,Sh
	D..0007	50.04.0125	1N4448		ITT,Ph,Sos,Tr
	D..0008	50.04.0125	1N4448		ITT,Ph,Sos,Tr
	D..0009	50.04.0125	1N4448		ITT,Ph,Sos,Tr
	D..0010	50.04.0122	1N4001	1N4002, 1N4003, 1N4004	ITT,Tf,Mot,GI

IND.	POS.NO.	PART NO.	VALUE	SPECIFICATIONS / EQUIVALENT	MANUF.
	D..0011	50.04.0122	1N4001	1N4002, 1N4003, 1N4004	ITT,Tf,Mot,GI
	D..0012	50.04.0122	1N4001	1N4002, 1N4003, 1N4004	ITT,Tf,Mot,GI
	D..0013	50.04.0122	1N4001	1N4002, 1N4003, 1N4004	ITT,Tf,Mot,GI
	D..0014	50.04.1102	6.8 V Z	BZX83C 6.8, BZX55C 6.8, ZPD 6.8	ITT,Ses
	D..0015	50.04.0122	1N4001	1N4002, 1N4003, 1N4004	ITT,Tf,Mot,GI
	D..0016	50.04.1102	6.8 V Z	BZX83C 6.8, BZX55C 6.8, ZPD 6.8	ITT,Ses
	D..0017	50.04.0125	1N4448		ITT,Ph,Sos,Tr
	D..0018	50.04.1107	3.3 V Z	BZX83C 3.3, BZX55C 3.3, ZPD 3.3	ITT,Ses
	IC.0001	50.10.0105	LM337T	LM337 neg. Voltage Regulator	NS,TI
	IC.0002	50.10.0104	LM317T	LM317KC pos. Voltage Regulator	NS,Mot,TI
	IC.0003	50.10.0104	LM317T	LM317KC pos. Voltage Regulator	NS,Mot,TI
	IC.0004	50.05.0283	LM393N		TI,NS
	IC.0005	50.05.0283	LM393N		TI,NS
	IC.0006	50.05.0279	SG3524BN	Voltage Regulator	TI,SG
	L..0001	1.022.217.00		HF-Coil, 5A, RM8	St
	L..0002	1.022.217.00		HF-Coil, 5A, RM8	St
	P..0001	54.02.0406	12 cont.	case-nr. 54.02.0408, see note 1	
	P..0002	54.02.0320	6 cont.		
	Q..0001	50.03.0512	BD899A	BDW93B	Mot,SGS
	Q..0002	50.03.0513	BD900A	BDW94B	Mot,SGS
	Q..0003	50.03.0452	D140-10		Ph,Sie,Tf
	Q..0004	50.03.0518	2SA1232	2SA1141	NEC
	Q..0005	50.99.0106	TZ8000	SC1460, BTL38-500	RCA,GE,Ph
	Q..0006	50.03.0434	BFR18		SGS
	Q..0007	50.03.0436	BC237B	BC547B,BC550B	ITT,Sie,Mot,Ph,Tf,TI,NEC
	Q..0008	50.03.0515	BC307B	BC251B,BC557B,BC560B	Mot,Ph,ITT,Tf,TI,NEC
	Q..0009	50.03.0515	BC307B	BC251B,BC557B,BC560B	Mot,Ph,ITT,Tf,TI,NEC
	Q..0010	50.03.0515	BC307B	BC251B,BC557B,BC560B	Mot,Ph,ITT,Tf,TI,NEC
	Q..0011	50.99.0106	TZ8000	SC1460, BTL38-500	RCA,GE,Ph
	Q..0012	50.03.0515	BC307B	BC251B,BC557B,BC560B	Mot,Ph,ITT,Tf,TI,NEC
	Q..0013	50.03.0436	BC237B	BC547B,BC550B	ITT,Sie,Mot,Ph,Tf,TI,NEC
	R..0001	57.11.4102	1 kOhm 5%		

IND.	POS.NO.	PART NO.	VALUE	SPECIFICATIONS / EQUIVALENT	MANUF.
	R..0002	57.11.4102	1 kOhm	5%	
	R..0003	57.11.4122	1.2 kOhm	5%	
	R..0004	57.11.4271	270 Ohm	5%	
	R..0005	57.11.4102	1 kOhm	5%	
	R..0006	57.11.4102	1 kOhm	5%	
	R..0007	57.11.4681	680 Ohm	5%	
	R..0008	57.11.4100	10 Ohm	5%	
	R..0009	57.11.4221	220 Ohm	5%	
	R..0010	57.11.4472	4.7 kOhm	5%	
	R..0011	57.11.4272	2.7 kOhm	5%	
	R..0012	57.11.4272	2.7 kOhm	5%	
	R..0013	57.11.4222	2.2 kOhm	5%	
	R..0014	57.11.4222	2.2 kOhm	5%	
	R..0015	57.11.4683	68 kOhm	5%	
	R..0016	57.11.3202	2 kOhm	5%	
	R..0017	57.11.4101	100 Ohm	5%	
	R..0018	57.11.4102	1 kOhm	5%	
	R..0019	57.11.4222	2.2 kOhm	5%	
	R..0020	57.11.4103	10 kOhm	5%	
	R..0021	57.11.3622	6.2 kOhm	5%	
	R..0022	57.56.5108	0.1 Ohm	10%, 4W	
	R..0023	57.56.5108	0.1 Ohm	10%, 4W	
	R..0024	57.11.4105	1 MOhm	5%	
	R..0025	57.11.4272	2.7 kOhm	5%	
	R..0026	57.11.4181	180 Ohm	2%	
	R..0027	57.11.4470	47 Ohm	5%	
	R..0028	57.11.4222	2.2 kOhm	5%	
	R..0029	57.11.4561	560 Ohm	5%	
	R..0030	57.11.4562	5.6 kOhm	5%	
	R..0031	57.11.4152	1.5 kOhm	5%	
	R..0032	57.11.4222	2.2 kOhm	5%	
	R..0033	57.11.4222	2.2 kOhm	5%	
	R..0034	57.11.4683	68 kOhm	5%	
	R..0035	57.11.3332	3.3 kOhm	1%	
	R..0036	57.56.5108	0.1 Ohm	10%, 4W	
	R..0037	57.11.4100	10 Ohm	5%	
(00)	R..0038	57.11.4102	1 kOhm	5%	

IND.	POS.NO.	PART NO.	VALUE	SPECIFICATIONS / EQUIVALENT	MANUF.
(01)	R..0038	57.11.4103	10 kOhm	5%	
	R..0039	57.11.4682	6.8 kOhm	5%	
	R..0040	57.11.4471	470 Ohm	5%	
	R..0041	57.11.4152	1.5 kOhm	5%	
(00)	R..0042	57.11.4102	1 kOhm	5%	
(01)	R..0042	57.11.4103	10 kOhm	5%	
	R..0043	57.11.4472	4.7 kOhm	5%	
(00)	R..0044	57.11.4121	120 Ohm	5%	
(02)	R..0044	57.11.4273	27 kOhm	5%	
	R..0045	57.11.3113	11 kOhm	1%	
	R..0046	57.11.3102	1 kOhm	1%	
	R..0047	57.11.4332	3.3 kOhm	5%	
	R..0048	57.11.4101	100 Ohm	5%	
	R..0049	57.11.4331	330 Ohm	5%	
	R..0050	57.11.4101	100 Ohm	5%	
	R..0051	57.11.4332	3.3 kOhm	5%	
	R..0052	57.11.3102	1 kOhm	1%	
	R..0053	57.11.3113	11 kOhm	1%	
	R..0054	57.11.4332	3.3 kOhm	5%	
	R..0055	57.11.4472	4.7 kOhm	5%	
	R..0056	57.11.4561	560 Ohm	5%	
	R..0057	57.11.4101	100 Ohm	5%	
	R..0058	57.56.5108	0.1 Ohm	10%, 4W	
	R..0059	57.11.4153	15 kOhm	5%	
	R..0060	57.11.4102	1 kOhm	5%	
	R..0061	57.11.4183	18 kOhm	5%	
	R..0062	57.11.4220	22 Ohm	5%	
	R..0063	57.11.4101	100 Ohm	5%	
	R..0064	57.11.4123	12 kOhm	5%	
	R..0065	57.11.4222	2.2 kOhm	5%	
	R..0066	57.11.4102	1 kOhm	5%	
	R..0067	57.11.4102	1 kOhm	5%	
	R..0068	57.11.4472	4.7 kOhm	5%	
	R..0069	59.01.7102	1 kOhm	10%, 0.25W, see note 2	
(03)	R..0070	57.11.4222	2.2 kOhm	5%	
(03)	R..0071	57.11.4472	4.7 kOhm	5%	

IND.	POS.NO.	PART NO.	VALUE	SPECIFICATIONS / EQUIVALENT	MANUF.

(01) 83/01/26 Reducing of comparator sink current below 4 mA.

(02) 83/05/26 Improved triggering of frequency divider IC 6.

(03) 83/08/10 Voltage compair in common mode range of error amplifier.

Note 1: Pin. Molex-nr. 02-06-8103
Case. Molex-nr. 03-06-2121

Note 2: Potentiometer, linear. Bourns-nr. 3386 H-1-102
Allen Bradley-nr. E 6 X 102

Ce=Ceramic, El=Electrolytic, Sal=Solid Aluminium

Manufacturer: GE=General Electric, GI=General Instruments,
ITT=Internatal, Mot=Motorola, NEC=Nippon Electric Corp.
NS=National Semiconductors, Ph=Philips,
RCA=Radio Corporation of America, Sos=Sescosem,
SG=Silicon General, SGS=SGS/Ates, Sh=Shindengen,
Sie=Siemens, St=Studer, Tf=Telefunken,
TI=Texas Instruments, Tr=Transitron, Vas=Varo

DRIG 81/09/10 (01) 83/01/26 (02) 83/05/26 (03) 83/08/10

STABILIZER PCB 1.810.770–81 GR7

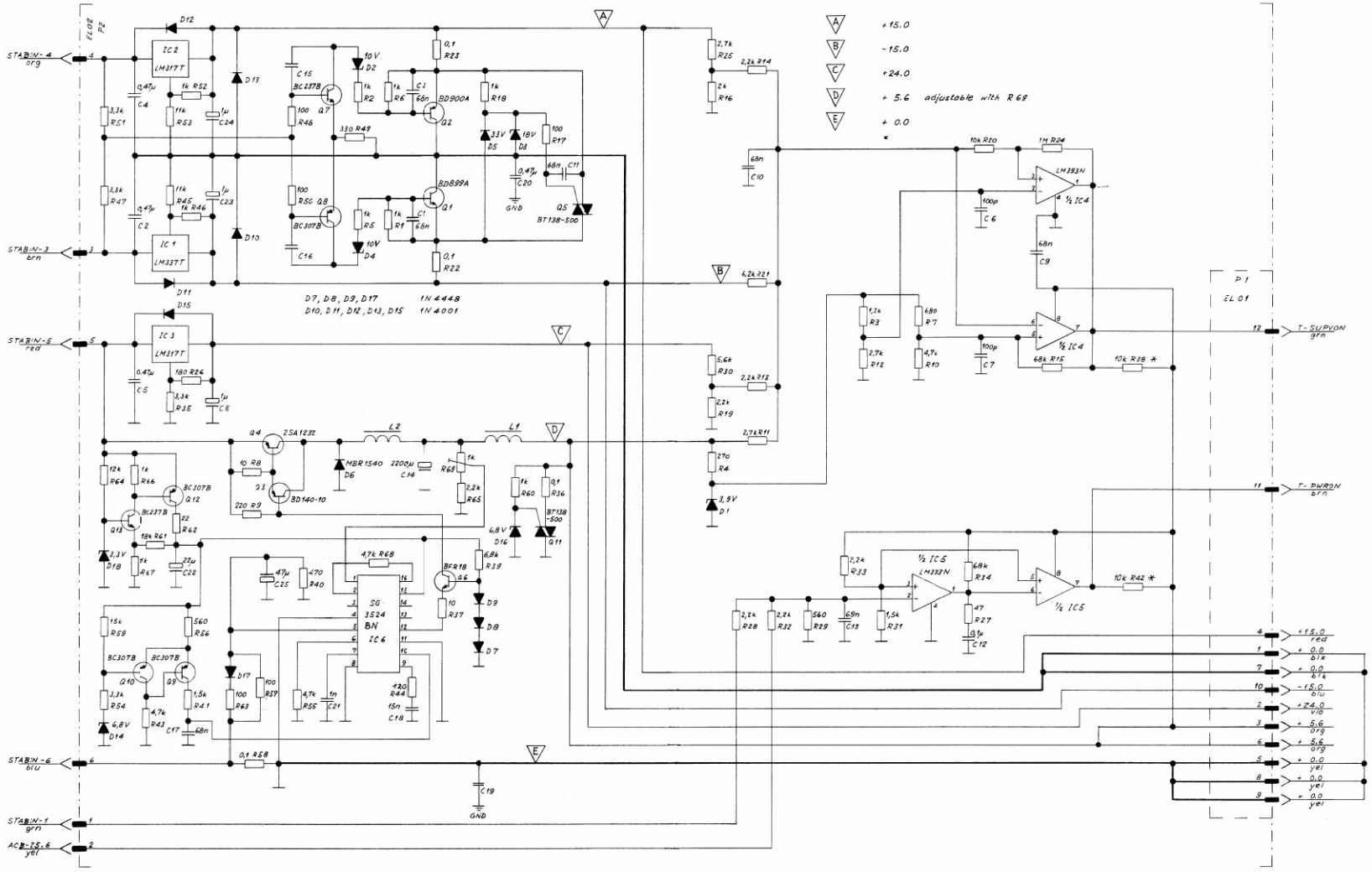

STABILIZER PCB 1.810.770–81 GR7

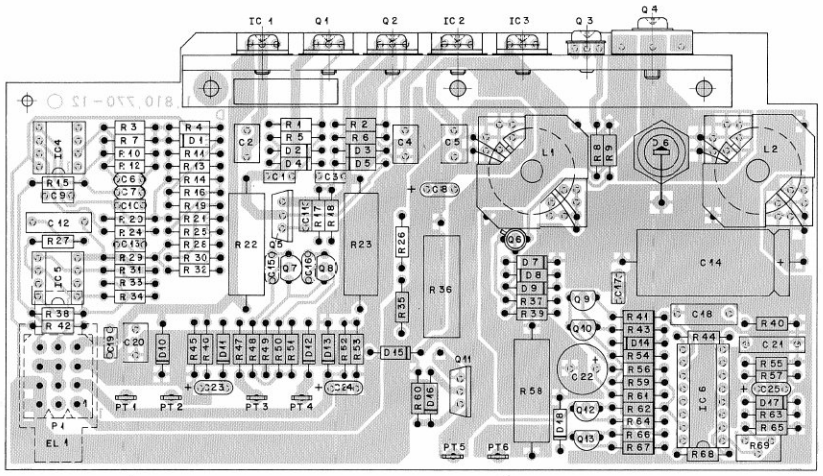

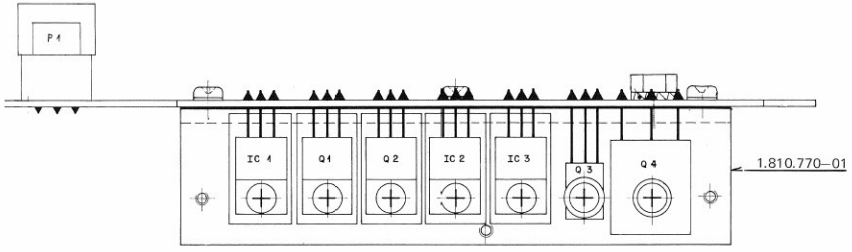

IND.	POS.NO.	PART NO.	VALUE	SPECIFICATIONS / EQUIVALENT	MANUF.
	C..0001	59.96.0205	68 nF	Ce	
	C..0002	59.06.5474	0.47 uF	5%	
	C..0003	59.96.0205	68 nF	Ce	
	C..0004	59.06.5474	0.47 uF	5%	
	C..0005	59.06.5474	0.47 uF	5%	
	C..0006	59.34.4101	100 pF	Ce	
	C..0007	59.34.4101	100 pF	Ce	
	C..0008	59.26.9109	1 uF	40V, Sal	Ph
	C..0009	59.96.0205	68 nF	Ce	
	C..0010	59.96.0205	68 nF	Ce	
	C..0011	59.96.0205	68 nF	Ce	
	C..0012	59.02.2104	0.1 uF	5%	
	C..0013	59.96.0205	68 nF	Ce	
	C..0014	59.25.1222	2200 uF	6V, El	
	C..0015		not used		
	C..0016		not used		
	C..0017	59.96.0205	68 nF	Ce	
	C..0018	59.02.5153	15 nF	5%	
	C..0019		not used		
	C..0020	59.06.5474	0.47 uF	5%	
	C..0021	59.11.6102	1 nF	5%	
	C..0022	59.22.8220	22 uF	40V, El	
	C..0023	59.26.9109	1 uF	25V, Sal	Ph
	C..0024	59.26.9109	1 uF	25V, Sal	Ph
	C..0025	59.26.0470	47 uF	23%, 3V, Sal	Ph
	D..0001	50.04.1101	3.9 V Z	BZX83C 3.9, BZX55C 3.9, ZPD 3.9	ITT,Ses
	D..0002	50.04.1114	10 V Z	BZX83C 10, BZX55C 10, ZPD 10	ITT,Ses
	D..0003	50.04.1122	18 V Z	BZX83C 18, BZX55C 18, ZPD 18	ITT,Ses
	D..0004	50.04.1114	10 V Z	BZX83C 10, BZX55C 10, ZPD 10	ITT,Ses
	D..0005	50.04.1127	33 V Z	BZX83C 33, BZX55C 33, ZPD 33	ITT,Ses
	D..0006	50.04.0511	MBR1540	VS41540, S1554	Mot,Va,Sh
	D..0007	50.04.0125	1N4448		ITT,Ph,Ses,Tr
	D..0008	50.04.0125	1N4448		ITT,Ph,Ses,Tr
	D..0009	50.04.0125	1N4448		ITT,Ph,Ses,Tr
	D..0010	50.04.0122	1N4001	1N4002, 1N4003, 1N4004	ITT,Tf,Mot,GI
	D..0011	50.04.0122	1N4001	1N4002, 1N4003, 1N4004	ITT,Tf,Mot,GI

S T U D E R (00) 83/09/10 PB STABILIZER 1.810.770.81 PAGE 1

IND.	POS.NO.	PART NO.	VALUE	SPECIFICATIONS / EQUIVALENT	MANUF.
	D..0012	50.04.0122	1N4001	1N4002, 1N4003, 1N4004	ITT,Tf,Mot,GI
	D..0013	50.04.0122	1N4001	1N4002, 1N4003, 1N4004	ITT,Tf,Mot,GI
	D..0014	50.04.1102	6.8 V Z	BZX83C 6.8, BZX55C 6.8, ZPD 6.8	ITT,Ses
	D..0015	50.04.0122	1N4001	1N4002, 1N4003, 1N4004	ITT,Tf,Mot,GI
	D..0016	50.04.1102	6.8 V Z	BZX83C 6.8, BZX55C 6.8, ZPD 6.8	ITT,Ses
	D..0017	50.04.0125	1N4448		ITT,Ph,Ses,Tr
	D..0018	50.04.1107	3.3 V Z	BZX83C 3.3, BZX55C 3.3, ZPD 3.3	ITT,Ses
	IC..0001	50.10.0105	LM337T	LM137 neg. Voltage Regulator	NS,TI
	IC..0002	50.10.0104	LM317T	LM117KC pos. Voltage Regulator	NS,Mot,TI
	IC..0003	50.10.0104	LM317T	LM117KC pos. Voltage Regulator	NS,Mot,TI
	IC..0004	50.05.0283	LM393N		TI,NS
	IC..0005	50.05.0283	LM393N		TI,NS
	IC..0006	50.05.0279	SG3524N	Voltage Regulator	TI,SG
	L..0001	1.822.217.00		HF-Coil, 5A, RM8	St
	L..0002	1.822.217.00		HF-Coil, 5A, RM8	St
	P..0001	54.02.0406	12 cont.	case-nr. 54.02.0408, see note 1	
	P..0002	54.02.0320	6 cont.	Lupot Nr. E 184 / 8 LE	
	Q..0001	50.03.0512	BD899A	BD938	Mot,SGS
	Q..0002	50.03.0513	BD900A	BD948	Mot,SGS
	Q..0003	50.03.0452	BD140-10		Ph,Sie,Tf
	Q..0004	50.03.0518	2SA1232	2SA1141	NEC
	Q..0005	50.99.0106	TZ8000	SC1460, BT138-500	RCA,GE,Ph
	Q..0006	50.03.0434	BFR18		SGS
	Q..0007	50.03.0436	BC237B	BC547B,BC550b ITT,Sie,Mot,Ph,Tf,TI,NEC	
	Q..0008	50.03.0515	BC307B	BC251B,BC557B,BC560B Mot,Ph,ITT,Tf,TI,NEC	
	Q..0009	50.03.0515	BC307B	BC251B,BC557B,BC560B Mot,Ph,ITT,Tf,TI,NEC	
	Q..0010	50.03.0515	BC307B	BC251B,BC557B,BC560B Mot,Ph,ITT,Tf,TI,NEC	
	Q..0011	50.99.0106	TZ8000	SC1460, BT138-500 RCA,GE,Ph	
	Q..0012	50.03.0515	BC307B	BC251B,BC557B,BC560B Mot,Ph,ITT,Tf,TI,NEC	
	Q..0013	50.03.0436	BC237B	BC547B,BC550b ITT,Sie,Mot,Ph,Tf,TI,NEC	
	R..0001	57.11.4102	1 kOhm	5%	
	R..0002	57.11.4102	1 kOhm	5%	

S T U D E R (00) 83/09/10 PB STABILIZER 1.810.770.81 PAGE 2

IND.	POS.NO.	PART NO.	VALUE	SPECIFICATIONS / EQUIVALENT	MANUF.
	R..0003	57.11.4122	1.2 kOhm	5%	
	R..0004	57.11.4271	270 Ohm	5%	
	R..0005	57.11.4102	1 kOhm	5%	
	R..0006	57.11.4102	1 kOhm	5%	
	R..0007	57.11.4681	680 Ohm	5%	
	R..0008	57.11.4100	10 Ohm	5%	
	R..0009	57.11.4221	220 Ohm	5%	
	R..0010	57.11.4472	4.7 kOhm	5%	
	R..0011	57.11.4277	2.7 kOhm	5%	
	R..0012	57.11.4272	2.7 kOhm	5%	
	R..0013	57.11.4222	2.2 kOhm	5%	
	R..0014	57.11.4222	2.2 kOhm	5%	
	R..0015	57.11.4683	68 kOhm	5%	
	R..0016	57.11.3207	2 kOhm	5%	
	R..0017	57.11.4101	100 Ohm	5%	
	R..0018	57.11.4102	1 kOhm	5%	
	R..0019	57.11.4222	2.2 kOhm	5%	
	R..0020	57.11.4103	10 kOhm	5%	
	R..0021	57.11.3622	6.2 kOhm	5%	
	R..0022	57.56.5108	0.1 Ohm	10%, 4W	
	R..0023	57.56.5108	0.1 Ohm	10%, 4W	
	R..0024	57.11.4105	1 MOhm	5%	
	R..0025	57.11.4272	2.7 kOhm	5%	
	R..0026	57.11.4181	180 Ohm	5%	
	R..0027	57.11.4470	47 Ohm	5%	
	R..0028	57.11.4222	2.2 kOhm	5%	
	R..0029	57.11.4561	560 Ohm	5%	
	R..0030	57.11.4562	5.6 kOhm	5%	
	R..0031	57.11.4152	1.5 kOhm	5%	
	R..0032	57.11.4222	2.2 kOhm	5%	
	R..0033	57.11.4222	2.2 kOhm	5%	
	R..0034	57.11.4683	68 kOhm	5%	
	R..0035	57.11.3332	3.3 kOhm	1%	
	R..0036	57.56.5108	0.1 Ohm	10%, 4W	
	R..0037	57.11.4100	10 Ohm	5%	
	R..0038	57.11.4103	10 kOhm	5%	
	R..0039	57.11.4682	6.8 kOhm	5%	

S T U D E R (00) 83/09/10 PB STABILIZER 1.810.770.81 PAGE 3

IND.	POS.NO.	PART NO.	VALUE	SPECIFICATIONS / EQUIVALENT	MANUF.
	R..0040	57.11.4471	470 Ohm	5%	
	R..0041	57.11.4152	1.5 kOhm	5%	
	R..0042	57.11.4103	10 kOhm	5%	
	R..0043	57.11.4472	4.7 kOhm	5%	
	R..0044	57.11.4273	27 kOhm	5%	
	R..0045	57.11.3113	11 kOhm	1%	
	R..0046	57.11.3102	1 kOhm	1%	
	R..0047	57.11.4332	3.3 kOhm	5%	
	R..0048	57.11.4101	100 Ohm	5%	
	R..0049	57.11.4331	330 Ohm	5%	
	R..0050	57.11.4101	100 Ohm	5%	
	R..0051	57.11.4332	3.3 kOhm	5%	
	R..0052	57.11.3102	1 kOhm	1%	
	R..0053	57.11.3113	11 kOhm	1%	
	R..0054	57.11.4332	3.3 kOhm	5%	
	R..0055	57.11.4472	4.7 kOhm	5%	
	R..0056	57.11.4561	560 Ohm	5%	
	R..0057	57.11.4101	100 Ohm	5%	
	R..0058	57.56.5108	0.1 Ohm	10%, 4W	
	R..0059	57.11.4153	15 kOhm	5%	
	R..0060	57.11.4102	1 kOhm	5%	
	R..0061	57.11.4183	18 kOhm	5%	
	R..0062	57.11.4220	22 Ohm	5%	
	R..0063	57.11.4101	100 Ohm	5%	
	R..0064	57.11.4123	12 kOhm	5%	
	R..0065	57.11.4222	2.2 kOhm	5%	
	R..0066	57.11.4102	1 kOhm	5%	
	R..0067	57.11.4102	1 kOhm	5%	
	R..0068	57.11.4472	4.7 kOhm	5%	
	R..0069	58.01.9102	1 kOhm	10%, 0.25W, see note 2	

S T U D E R (00) 83/09/10 PB STABILIZER 1.810.770.81 PAGE 4

IND.	POS.NO.	PART NO.	VALUE	SPECIFICATIONS / EQUIVALENT	MANUF.

Note 1 - Connector:

Molex Pin Nr.	02-06-81E3	
Molex Case Nr.	03-06-2121	

Note 2 - 1 kOhm Potentiometer:

Bourns Nr.	3386 X-1-102
VRN Nr.	780-40X 1k
Spectrol Nr.	63 X 102 T010

C=Ceramic, El=Electrolytic, Sal=Solid Aluminium

Manufacturer: GE=General Electric, GI=General Instruments,
ITT=Intermetal, Mot=Motorola, NEC=Nippon Electric Corp.
NS=National Semiconductors, Ph=Philips,
RCA=Radio Corporation of America, Ses=Sescosem,
SG=Silicon General, SGS=SGS/Ates, Sh=Shindengen,
Sie=Siemens, St=Studer, Tf=Telefunken,
TI=Texas Instruments, Tr=Transitron, Va=Varo

ORIG 83/09/10

S T U D E R (00) 83/09/10 PB STABILIZER 1.810.770.81 PAGE 5

STABILIZER PCB 1.810.770-82/-83 GR7

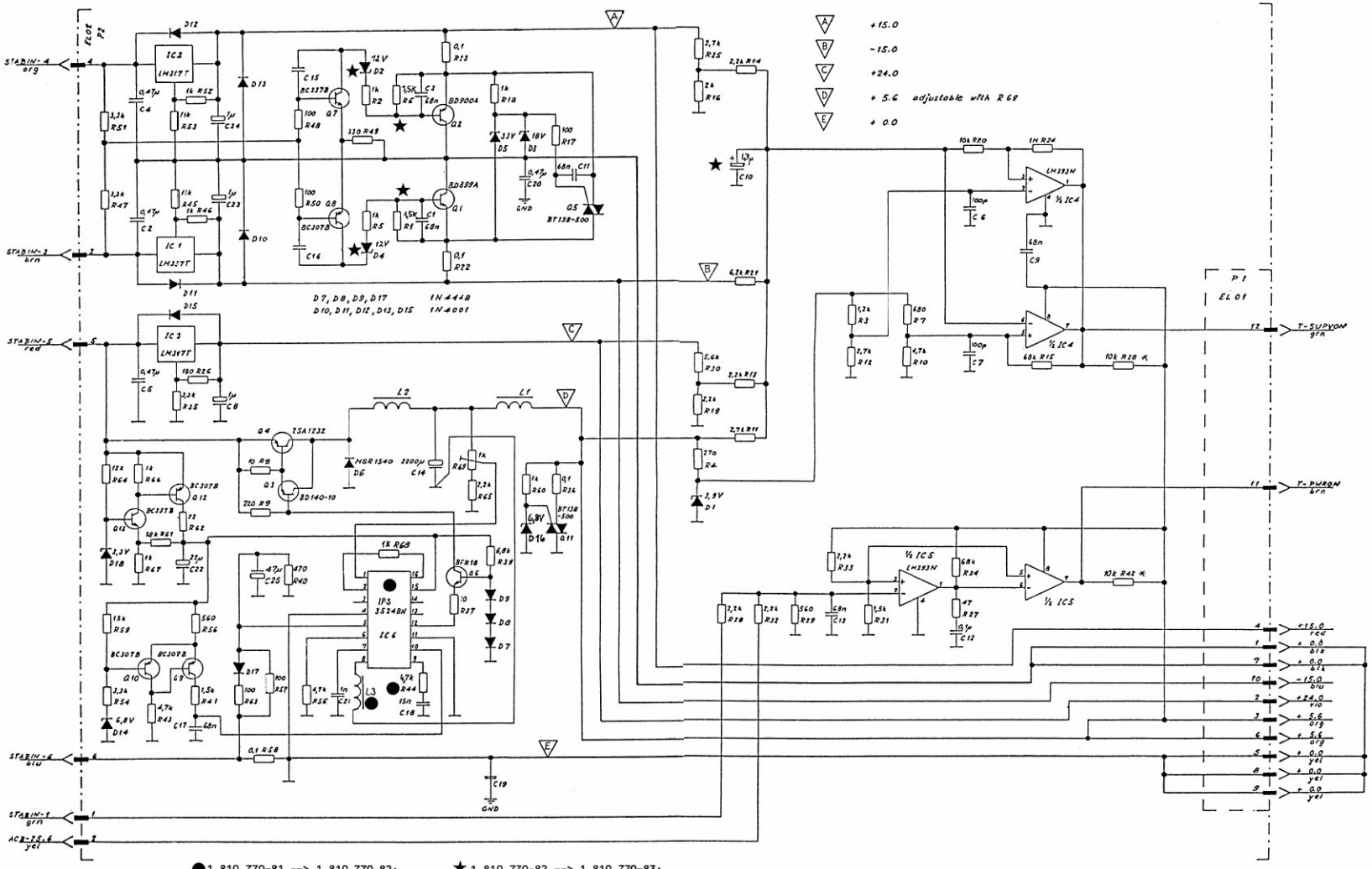

● 1.810.770-81 --> 1.810.770-82:
Modified components:
- IC6: IPS 3524 BN.
- R44: 4.7 kΩ, 57.11.4472 .
New components:
- Inductor L3: 62.01.0115. Inserted between IC6/pin8, and Ground terminal of C14 (2200 µF).

★ 1.810.770-82 --> 1.810.770-83:
Modified components:
C10: 47 µF, 59.26.0470 .
D2: 12 V, 50.04.1117 .
D4: 12 V, 50.04.1117 .
R1: 1.5 kΩ, 57.11.3152 .
R6: 1.5 kΩ, 57.11.3152 .

1.11.85 LN		A 810 Power Supply		
STUDER	Stabilizer	SC	1.810.770-83	PAGE 1 OF 1

STABILIZER PCB 1.810.770-82/-83 GR7

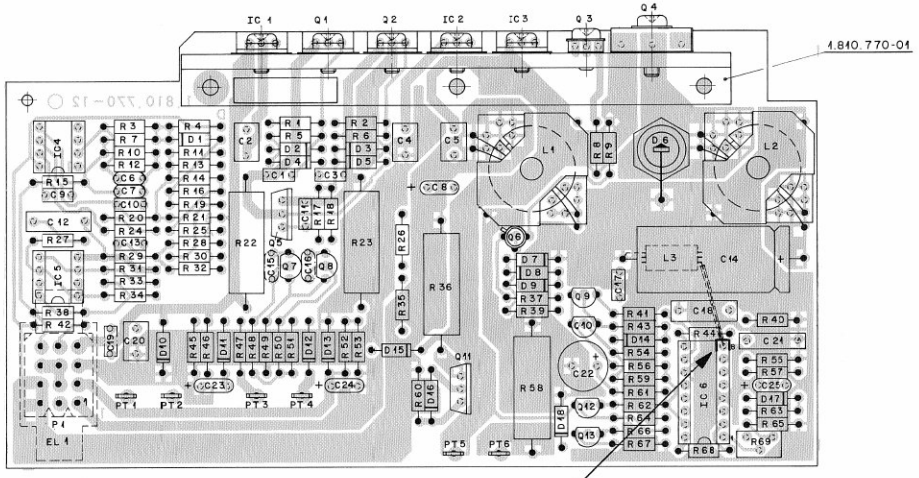

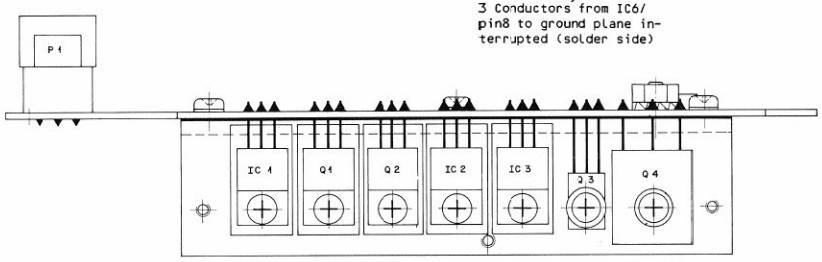

IND.	POS.NO.	PART NO.	VALUE	SPECIFICATIONS / EQUIVALENT	MANUF.
	C.....1	59.99.0205	68 nF	Ce	
	C.....2	59.06.5474	470 nF	5%	
	C.....3	59.99.0205	68 nF	Ce	
	C.....4	59.06.5474	470 nF	5%	
	C.....5	59.06.5474	470 nF	5%	
	C.....6	59.34.4101	100 pF	Ce	
	C.....7	59.34.4101	100 pF	Ce	
	C.....8	59.26.9109	1 uF	63V, Sal	Ph
	C.....9	59.99.0205	68 nF	Ce	
	C.....10	59.26.0470	47 uF	6.3V, Sal	Ph
	C.....11	59.99.0205	68 nF	Ce	
	C.....12	59.02.2104	100 nF	5%	
	C.....13	59.99.0205	68 nF	Ce	
	C.....14	59.25.1222	2200 uF	5V, El	
	C.....15		not used		
	C.....16		not used		
	C.....17	59.99.0205	68 nF	Ce	
	C.....18	59.02.5153	15 nF	5%	
	C.....19		not used		
	C.....20	59.06.5474	470 nF	5%	
	C.....21	59.11.6102	1 nF	5%	
	C.....22	59.22.8220	22 uF	63V, El	
	C.....23	59.26.9109	1 uF	25V, Sal	Ph
	C.....24	59.26.9109	1 uF	25V, Sal	Ph
	C.....25	59.26.0470	47 uF	20%, 35V, Sal	Ph
	D.....1	50.04.1101	3.9 V Z	BZX83C 3.9, BZX55C 3.9, ZPD 3.9	ITT,Ses
	D.....2	50.04.1117	12 V Z	BZX83C 12, BZX55C 12, ZPD 12	ITT,Ses
	D.....3	50.04.1122	18 V Z	BZX83C 18, BZX55C 18, ZPD 18	ITT,Ses
	D.....4	50.04.1117	12 V Z	BZX83C 12, BZX55C 12, ZPD 12	ITT,Ses
	D.....5	50.04.1127	33 V Z	BZX83C 33, BZX55C 33, ZPD 33	ITT,Ses
	D.....6	50.04.0511	MR1540	VS61540, S1554	Mot,Vas,Sh
	D.....7	50.04.0125	1N4448		ITT,Ph,Ses,Tr
	D.....8	50.04.0125	1N4448		ITT,Ph,Ses,Tr
	D.....9	50.04.0125	1N4448		ITT,Ph,Ses,Tr
	D.....10	50.04.0122	1N4001	1N4002, 1N4003, 1N4004	ITT,Tf,Mot,GI
	D.....11	50.04.0122	1N4001	1N4002, 1N4003, 1N4004	ITT,Tf,Mot,GI

IND.	POS.NO.	PART NO.	VALUE	SPECIFICATIONS / EQUIVALENT	MANUF.
	D.....12	50.04.0122	1N4001	1N4002, 1N4003, 1N4004	ITT,Tf,Mot,GI
	D.....13	50.04.0122	1N4001	1N4002, 1N4003, 1N4004	ITT,Tf,Mot,GI
	D.....14	50.04.1102	6.8 V Z	BZX83C 6.8, BZX55C 6.8, ZPD 6.8	ITT,Ses
	D.....15	50.04.0122	1N4001	1N4002, 1N4003, 1N4004	ITT,Tf,Mot,GI
	D.....16	50.04.1102	6.8 V Z	BZX83C 6.8, BZX55C 6.8, ZPD 6.8	ITT,Ses
	D.....17	50.04.0125	1N4448		ITT,Ph,Ses,Tr
	D.....18	50.04.1107	3.3 V Z	BZX83C 3.3, BZX55C 3.3, ZPD 3.3	ITT,Ses
	IC.....1	50.16.0105	LM337T	LM337 neg. Voltage Regulator	NS,TI
	IC.....2	50.16.0104	LM317T	LM317KC pos. Voltage Regulator	NS,Mot,TI
	IC.....3	50.16.0104	LM317T	LM317KC pos. Voltage Regulator	NS,Mot,TI
	IC.....4	50.05.0283	LM393N		TI,NS
	IC.....5	50.05.0283	LM393N		TI,NS
	IC.....6	50.05.0279	SG3524N	Voltage Regulator	TI,SG
	L.....1	1.022.217.00		HF-Coil, 5A, RMB	St
	L.....2	1.022.217.00		HF-Coil, 5A, RMB	St
	L.....3	62.01.0115		Interference Coil, Philips Nr 4312 020 36700	
	P.....1	54.02.0406	12 cont.	case-nr. 54.02.0408, see note 1	
	P.....2	54.02.0320	6 cont.	Lupot Nr. E 184 / 8 LE	
	Q.....1	50.03.0512	BD899A	BD893B	Mot,SGS
	Q.....2	50.03.0513	BD900A	BD894B	Mot,SGS
	Q.....3	50.03.0452	80140-10		Ph,Sie,Tf
	Q.....4	50.03.0518	2SA1232	2SA1141	NEC
	Q.....5	50.99.0106	T28000	SC1460, ST138-500	RCA,GE,Ph
	Q.....6	50.03.0434	BFR19		SGS
	Q.....7	50.03.0436	BC237B	BC547B,BC550B	ITT,Sie,Mot,Ph,Tf,TI,NEC
	Q.....8	50.03.0515	BC307B	BC251B,BC557B,BC560B	Mot,Ph,ITT,Tf,TI,NEC
	Q.....9	50.03.0515	BC307B	BC251B,BC557B,BC560B	Mot,Ph,ITT,Tf,TI,NEC
	Q.....10	50.03.0515	BC307B	BC251B,BC557B,BC560B	Mot,Ph,ITT,Tf,TI,NEC
	Q.....11	50.99.0106	T28000	SC1460, ST138-500	RCA,GE,Ph
	Q.....12	50.03.0515	BC307B	BC251B,BC557B,BC560B	Mot,Ph,ITT,Tf,TI,NEC
	Q.....13	50.03.0436	BC237B	BC547B,BC550B	ITT,Sie,Mot,Ph,Tf,TI,NEC
	R.....1	57.11.4152	1.5 kOhm	5%	

IND.	POS.NO.	PART NO.	VALUE	SPECIFICATIONS / EQUIVALENT	MANUF.
	R.....2	57.11.4102	1 kOhm	5%	
	R.....3	57.11.4122	1.2 kOhm	5%	
	R.....4	57.11.4271	270 Ohm	5%	
	R.....5	57.11.4102	1 kOhm	5%	
	R.....6	57.11.4152	1.5 kOhm	5%	
	R.....7	57.11.4681	680 Ohm	5%	
	R.....8	57.11.4100	10 Ohm	5%	
	R.....9	57.11.4221	220 Ohm	5%	
	R.....10	57.11.4472	4.7 kOhm	5%	
	R.....11	57.11.4272	2.7 kOhm	5%	
	R.....12	57.11.4272	2.7 kOhm	5%	
	R.....13	57.11.4222	2.2 kOhm	5%	
	R.....14	57.11.4222	2.2 kOhm	5%	
	R.....15	57.11.4683	68 kOhm	5%	
	R.....16	57.11.3202	2 kOhm	5%	
	R.....17	57.11.4101	100 Ohm	5%	
	R.....18	57.11.4102	1 kOhm	5%	
	R.....19	57.11.4222	2.2 kOhm	5%	
	R.....20	57.11.4103	10 kOhm	5%	
	R.....21	57.11.3622	6.2 kOhm	5%	
	R.....22	57.56.5108	0.1 Ohm	10%, 4W	
	R.....23	57.56.5108	0.1 Ohm	10%, 4W	
	R.....24	57.11.4105	1 MOhm	5%	
	R.....25	57.11.4272	2.7 kOhm	5%	
	R.....26	57.11.4181	180 Ohm	2%	
	R.....27	57.11.4470	47 Ohm	5%	
	R.....28	57.11.4222	2.2 kOhm	5%	
	R.....29	57.11.4561	560 Ohm	5%	
	R.....30	57.11.4562	5.6 kOhm	5%	
	R.....31	57.11.4152	1.5 kOhm	5%	
	R.....32	57.11.4222	2.2 kOhm	5%	
	R.....33	57.11.4222	2.2 kOhm	5%	
	R.....34	57.11.4683	68 kOhm	5%	
	R.....35	57.11.3332	3.3 kOhm	1%	
	R.....36	57.56.5108	0.1 Ohm	10%, 4W	
	R.....37	57.11.4100	10 Ohm	5%	
	R.....38	57.11.4103	10 kOhm	5%	

IND.	POS.NO.	PART NO.	VALUE	SPECIFICATIONS / EQUIVALENT	MANUF.
	R.....39	57.11.4682	6.8 kOhm	5%	
	R.....40	57.11.4471	470 Ohm	5%	
	R.....41	57.11.4152	1.5 kOhm	5%	
	R.....42	57.11.4103	10 kOhm	5%	
	R.....43	57.11.4472	4.7 kOhm	5%	
	R.....44	57.11.4472	4.7 kOhm	5%	
	R.....45	57.11.3113	11 kOhm	1%	
	R.....46	57.11.3102	1 kOhm	1%	
	R.....47	57.11.4332	3.3 kOhm	5%	
	R.....48	57.11.4101	100 Ohm	5%	
	R.....49	57.11.4331	330 Ohm	5%	
	R.....50	57.11.4101	100 Ohm	5%	
	R.....51	57.11.4332	3.3 kOhm	5%	
	R.....52	57.11.3102	1 kOhm	1%	
	R.....53	57.11.3113	11 kOhm	1%	
	R.....54	57.11.4332	3.3 kOhm	5%	
	R.....55	57.11.4472	4.7 kOhm	5%	
	R.....56	57.11.4561	560 Ohm	5%	
	R.....57	57.11.4101	100 Ohm	5%	
	R.....58	57.56.5108	0.1 Ohm	10%, 4W	
	R.....59	57.11.4153	15 kOhm	5%	
	R.....60	57.11.4102	1 kOhm	5%	
	R.....61	57.11.4183	18 kOhm	5%	
	R.....62	57.11.4220	22 Ohm	5%	
	R.....63	57.11.4101	100 Ohm	5%	
	R.....64	57.11.4123	12 kOhm	5%	
	R.....65	57.11.4222	2.2 kOhm	5%	
	R.....66	57.11.4102	1 kOhm	5%	
	R.....67	57.11.4102	1 kOhm	5%	
	R.....68	57.11.4102	1 kOhm	5%	
	R.....69	58.01.9102	1 kOhm	10%, 0.25W, see note 2	

IND.	POS.NO.	PART NO.	VALUE	SPECIFICATIONS / EQUIVALENT	MANUF.
Note 1 - Connector:					
				Molex Pin Nr.	02-06-8103
				Molex Case Nr.	03-06-2121
Note 2 - 1 kOhm Potentiometer:					
				Bourns Nr.	3386 X-1-102
				VEN Nr.	78G-40X 1k
				Spectrol Nr.	63 X 102 T010

Ce=Ceramic, El=Electrolytic, Sal=Solid Aluminium.

Manufacturer: GE=General Electric, GI=General Instruments,
ITT=Intermetal, Mot=Motorola, NEC=Nippon Electric Corp.
NS=National Semiconductors, Ph=Philips,
RCA=Radio Corporation of America, Ses=Sescosem,
SG=Silicon General, SGS=SGS/Ates, Sh=Shindengen,
Sie=Siemens, St=Studer, Tf=Telefunken,
TI=Texas Instruments, Tr=Transitron, Vas=Varo

ORIG 85/11/04

HAS BEEN MODIFIED
FOR 1.810.770-82:
- C10: 68 nF, 59.99.0205 .
- D2,D4: 10 V, 50.04.1114 .
- R1,R6: 1 kΩ, 57.11.4102 .

PUBLISHED: 12/86

STABILIZER PCB 1.810.770-84 GR7

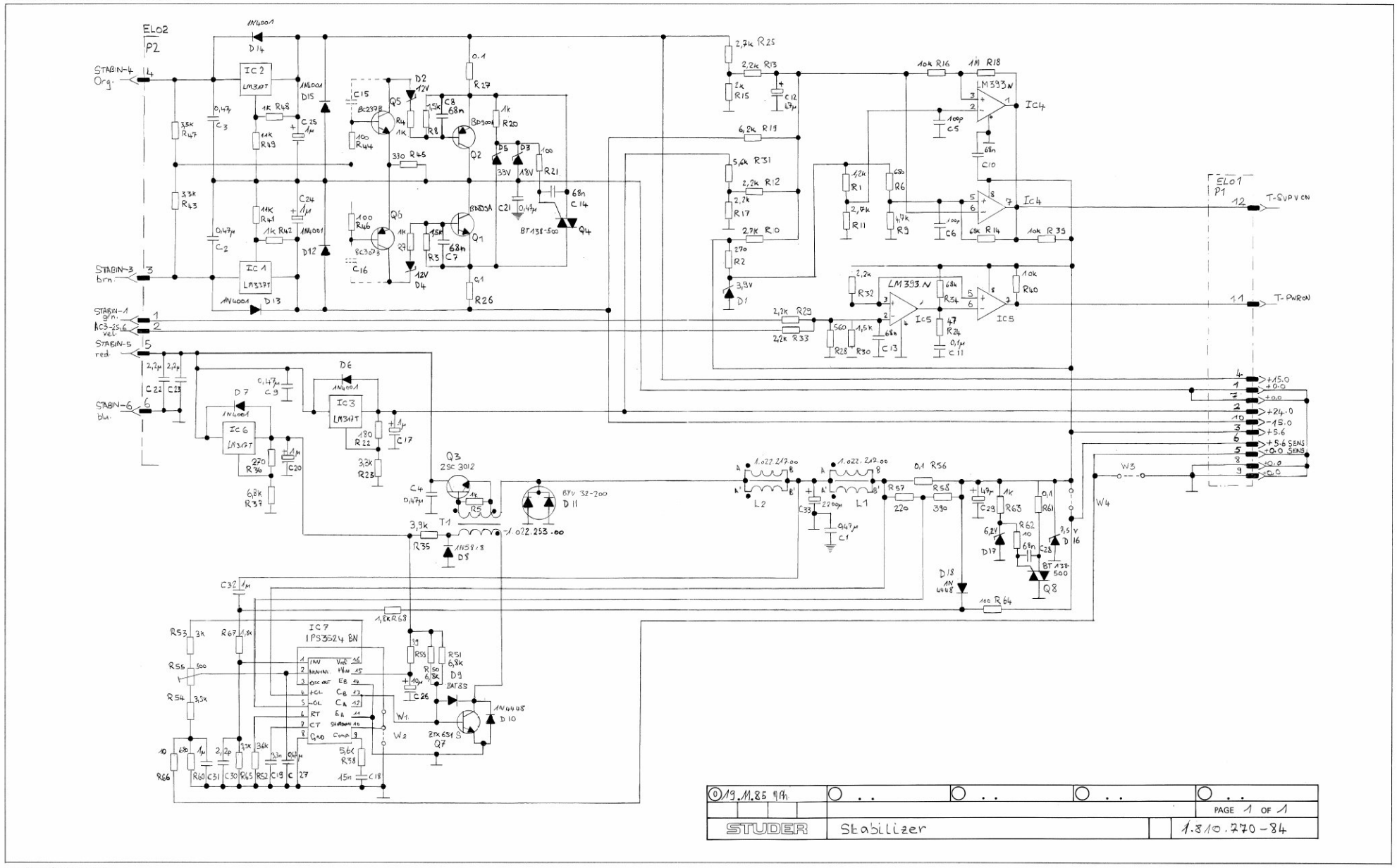

0 19.11.85				PAGE 1 OF 1
STUDER	Stabilizer			1.810.770-84

STABILIZER PCB 1.810.770-84 GR7

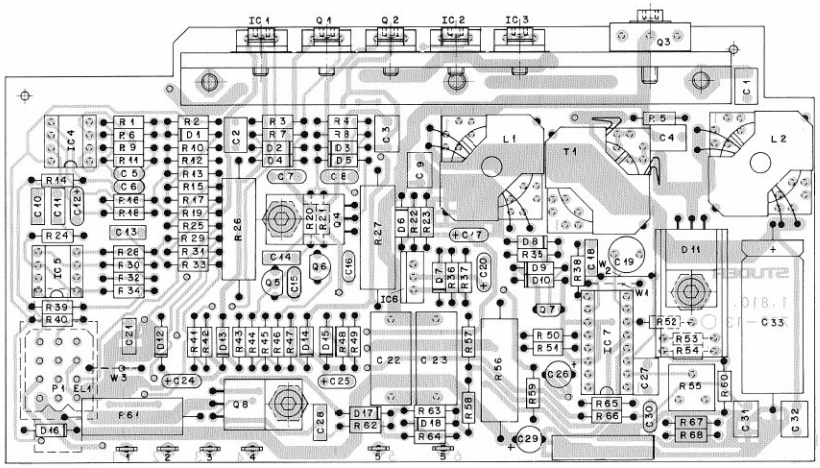

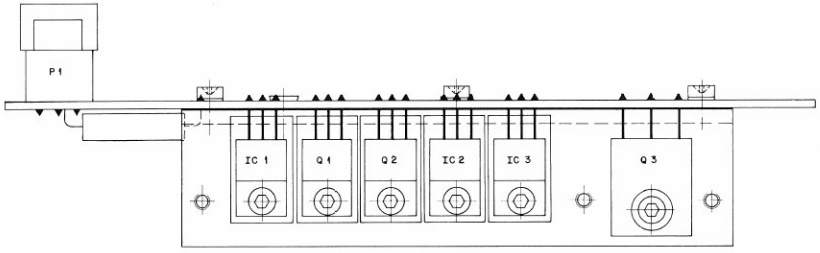

IND.	POS.NO.	PART NO.	VALUE	SPECIFICATIONS / EQUIVALENT	MANUF.
	C.....1	59.06.0474	.47uF	10%, ±3V , PETP	
	C.....2	59.06.0474	.47uF	10%, ±3V , PETP	
	C.....3	59.06.0474	.47uF	10%, ±3V , PETP	
	C.....4	59.06.0474	.47uF	10%, ±3V , PETP	
	C.....5	59.34.4101	100pF	5% N750 , CER	
	C.....6	59.34.4101	100pF	5% N750 , CER	
	C.....7	59.06.0683	68nF	10% ±3V , PETP	
	C.....8	59.06.0683	68nF	10% ±3V , PETP	
	C.....9	59.06.0474	.47uF	10%, ±3V , PETP	
	C.....10	59.06.0683	68nF	10%, ±3V , PETP	
	C.....11	59.06.5104	0.1uF	5%, ±3V , PETP	
	C.....12	59.26.0470	47uF	6.3V , SAL	
	C.....13	59.06.0683	68nF	10%, ±3V , PETP	
	C.....14	59.06.0683	68nF	10%, ±3V , PETP	
	C.....15			NOT USED	
	C.....16			NOT USED	
	C.....17	59.26.9109	1 uF	20%, +0V , SAL	
	C.....18	59.06.0153	15nF	10%, ±3V , PETP	
	C.....19	59.05.2332	3.3nF	2.5%, 160V , PP	
	C.....20	59.26.9109	1 uF	20%, +0V , SAL	
	C.....21	59.06.0474	.47uF	10%, ±3V , PETP	
	C.....22	59.02.0225	2.2uF	5%, ±3V , MPC	
	C.....23	59.02.0225	2.2uF	5%, ±3V , MPC	
	C.....24	59.26.9109	1 uF	20%, +0V , SAL	
	C.....25	59.26.9109	1 uF	20%, +0V , SAL	
	C.....26	59.22.6100	10uF	-20%, +0V , EL	
	C.....27	59.06.0474	.47uF	10%, ±3V , PETP	
	C.....28	59.06.0683	68nF	10%, ±3V , PETP	
	C.....29	59.22.3470	47uF	-20%, 0V , EL	
	C.....30	59.34.0229	2.2pF	5%, P100 , CER	
	C.....31	59.06.5105	1 uF	5%, 50V , PETP	
	C.....32	59.06.5105	1 uF	5%, 50V , PETP	
	C.....33	59.25.3222	2200uF	-20%, 16V , EL	
	D.....1	50.04.1101	3.9 V Z	BZX83C 3.9, BZX55C 3.9, ZPD 3.9	ITT,Ses
	D.....2	50.04.1117	12 V Z	BZX83C 10, BZX55C 10, ZPD 10	ITT,Ses
	D.....3	50.04.1122	18 V Z	BZX83C 18, BZX55C 18, ZPD 18	ITT,Ses

IND.	POS.NO.	PART NO.	VALUE	SPECIFICATIONS / EQUIVALENT	MANUF.
	D.....4	50.04.1117	12 V Z	BZX83C 10, BZX55C 10, ZPD 10	ITT,Ses
	D.....5	50.04.1127	33 V Z	BZX83C 33, BZX55C 33, ZPD 33	ITT,Ses
	D.....6	50.04.0122	1N 4001	...4004	ITT,Tfk,Mot,GI
	D.....7	50.04.0122	1N 4001	...4004	ITT,Tfk,Mot,GI
	D.....8	50.04.0512	1N 5818,	1N 5819,	Mot
	D.....9	50.04.0127	BAT 42,	BAT 85, BAS 40-02,	Mot,Ph,Si
	D.....10	50.04.0125	1N 4448		ITT,Ph,Ses,Tr
	D.....11	50.04.0517		BYV 32-200,	Ph
	D.....12	50.04.0122	1N 4001	...4004	ITT,Tfk,Mot,GI
	D.....13	50.04.0122	1N 4001	...4004	ITT,Tfk,Mot,GI
	D.....14	50.04.0122	1N 4001	...4004	ITT,Tfk,Mot,GI
	D.....15	50.04.0122	1N 4001	...4004	ITT,Tfk,Mot,GI
	D.....16	50.04.1503	7.5 V Z	1.3W	Mot
	D.....17	50.04.1118	6.2 V Z	BZX83C 6.2, BZX55C 6.2, ZPD 6.2	ITT,Ses
	D.....18	50.04.0125	1N 4448		ITT,Ph,Ses,Tr
	IC.....1	50.10.0105	LM 337 SP	TBB 0137-SP, Gesickt	NS,TI
	IC.....2	50.10.0104	LM 317 SP	TBB 0017 SP, Gesickt	NS,Mot,TI
	IC.....3	50.10.0104	LM 317 SP	TBB 0017 SP, Gesickt	NS,Mot,TI
	IC.....4	50.05.0283	LM 393 ..	TBB 0193 DP,	NS,TI
	IC.....5	50.05.0283	LM 393 ..	TBB 0193 DP,	NS,TI
	IC.....6	50.10.0104	LM 317 SP	TBB 0017 SP,	NS,Mot,TI
	IC.....7	50.05.0279		IP 3524 BN, SG 3524 BN	SG
	L.....1	1.022.217.00		HF-COIL, 5A, RMB	
	L.....2	1.022.217.00		HF-COIL, 5A, RMB	
	P.....1		Molex	see note 1	
	P.....2	54.02.0320	FLACH	6* 2.8*0.8, GERADE	
	Q.....1	50.03.0512	BD 899 A,	BDW 93 B	Mot,SGS
	Q.....2	50.03.0513	BD 900 A,	BDW 94 B	Mot,SGS
	Q.....3	50.03.0517	2 SC 3912		NEC
	Q.....4	50.99.0106	TZ800	400V, 8A , TRIAC	Ph
	Q.....5	50.03.0436	BC 237 B	..C, BC 547 B	alle
	Q.....6	50.03.0515	BC 307	BC 557 B	alle
	Q.....7	50.03.0523	ZTX 651 S		Fe

IND.	POS.NO.	PART NO.	VALUE	SPECIFICATIONS / EQUIVALENT	MANUF.
	Q.....8	50.99.0106	TZ800	400V, 8A , TRIAC	Ph
	R.....1	57.11.4122	1.2 kOhm	2%, 0207 , MF	
	R.....2	57.11.4271	270 Ohm	2%, 0207 , MF	
	R.....3	57.11.3152	1.5 kOhm	1%, 0207 , MF	
	R.....4	57.11.3102	1 kOhm	1%, 0207 , MF	
	R.....5	57.11.3102	1 kOhm	1%, 0207 , MF	
	R.....6	57.11.4681	680 Ohm	2%, 0207 , MF	
	R.....7	57.11.3102	1 kOhm	1%, 0207 , MF	
	R.....8	57.11.3152	1.5 kOhm	1%, 0207 , MF	
	R.....9	57.11.4472	4.7 kOhm	2%, 0207 , MF	
	R.....10	57.11.4272	2.7 kOhm	2%, 0207 , MF	
	R.....11	57.11.4272	2.7 kOhm	2%, 0207 , MF	
	R.....12	57.11.4222	2.2 kOhm	2%, 0207 , MF	
	R.....13	57.11.4222	2.2 kOhm	2%, 0207 , MF	
	R.....14	57.11.4683	68 kOhm	2%, 0207 , MF	
	R.....15	57.11.3202	2 kOhm	1%, 0207 , MF	
	R.....16	57.11.4103	10 kOhm	2%, 0207 , MF	
	R.....17	57.11.4222	2.2 kOhm	2%, 0207 , MF	
	R.....18	57.11.4105	1 MOhm	2%, 0207 , MF	
	R.....19	57.11.3622	6.2 kOhm	.1%, 0207 , MF	
	R.....20	57.11.3102	1 kOhm	.1%, 0207 , MF	
	R.....21	57.11.4101	100 Ohm	2%, 0207 , MF	
	R.....22	57.11.4181	180 Ohm	2%, 0207 , MF	
	R.....23	57.11.3332	3.3 kOhm	.1%, 0207 , MF	
	R.....24	57.11.4470	47 Ohm	2%, 0207 , MF	
	R.....25	57.11.4272	2.7 kOhm	2%, 0207 , MF	
	R.....26	57.56.5108	0.1 Ohm	10%, 4 W , WW	Gesickt
	R.....27	57.56.5108	0.1 Ohm	10%, 4 W , WW	Gesickt
	R.....28	57.11.4561	560 Ohm	2%, 0207 , MF	
	R.....29	57.11.4222	2.2 kOhm	2%, 0207 , MF	
	R.....30	57.11.4152	1.5 kOhm	2%, 0207 , MF	
	R.....31	57.11.4562	5.6 kOhm	2%, 0207 , MF	
	R.....32	57.11.4222	2.2 kOhm	2%, 0207 , MF	
	R.....33	57.11.4222	2.2 kOhm	2%, 0207 , MF	
	R.....34	57.11.4683	68 kOhm	2%, 0207 , MF	
	R.....35	57.11.3392	3.9 kOhm	.1%, 0207 , MF	

IND.	POS.NO.	PART NO.	VALUE	SPECIFICATIONS / EQUIVALENT	MANUF.
	R.....36	57.11.4271	270 Ohm	2%, 0207 , MF	
	R.....37	57.11.3682	6.8 kOhm	1%, 0207 , MF	
	R.....38	57.11.4562	5.6 kOhm	2%, 0207 , MF	
	R.....39	57.11.4103	10 kOhm	2%, 0207 , MF	
	R.....40	57.11.4103	10 kOhm	2%, 0207 , MF	
	R.....41	57.11.3113	11 kOhm	1%, 0207 , MF	
	R.....42	57.11.3102	1 kOhm	1%, 0207 , MF	
	R.....43	57.11.3332	3.3 kOhm	1%, 0207 , MF	
	R.....44	57.11.4101	100 Ohm	2%, 0207 , MF	
	R.....45	57.11.4331	330 Ohm	2%, 0207 , MF	
	R.....46	57.11.4101	100 Ohm	2%, 0207 , MF	
	R.....47	57.11.3332	3.3 kOhm	1%, 0207 , MF	
	R.....48	57.11.3102	1 kOhm	1%, 0207 , MF	
	R.....49	57.11.3113	11 kOhm	1%, 0207 , MF	
	R.....50	57.11.3682	6.8 kOhm	1%, 0207 , MF	
	R.....51	57.11.3682	6.8 kOhm	1%, 0207 , MF	
	R.....52	57.11.3362	3.6 kOhm	1%, 0207 , MF	
	R.....53	57.11.3302	3.0 kOhm	1%, 0207 , MF	
	R.....54	57.11.3332	3.3 kOhm	1%, 0207 , MF	
	R.....55	58.01.8501	500 Ohm	10%, .5 W , PMG	see note 2
	R.....56	57.56.5108	0.1 Ohm	10%, 4 W , WW	Gesickt
	R.....57	57.11.4221	220 Ohm	2%, 0207 , MF	
	R.....58	57.11.4391	390 Ohm	2%, 0207 , MF	
	R.....59	57.11.4390	39 Ohm	2%, 0207 , MF	
	R.....60	57.11.4681	680 Ohm	2%, 0207 , MF	
	R.....61	57.56.5108	0.1 Ohm	10%, 4 W , WW	
	R.....62	57.11.4100	10 Ohm	2%, 0207 , MF	
	R.....63	57.11.3102	1 kOhm	1%, 0207 , MF	
	R.....64	57.11.4101	100 Ohm	2%, 0207 , MF	
	R.....65	57.11.3332	3.3 kOhm	1%, 0207 , MF	
	R.....66	57.11.4100	10 Ohm	2%, 0207 , MF	
	R.....67	57.11.3182	1.8 kOhm	1%, 0207 , MF	
	R.....68	57.11.3182	1.8 kOhm	1%, 0207 , MF	
	T.....1	1.022.253.00		DRIVE "RAFO	
	W.....1	1.010.324.64		DRAHT BRUCKE	

IND.	POS.NO.	PART NO.	VALUE	SPECIFICATIONS / EQUIVALENT	MANUF.
	W.....2			NOT USED	
	W.....3			NOT USED	

Note 1 - Connector:

Molex Pin Nr.		02-06-8103
Molex Case Nr.		03-06-2121

Note 2 - 500 Ohm Potentiometer:

Cerastat	PDT 3104F-1-501

Ce=Ceramic, El=Electrolytic, Sal=Solid Aluminium

Manufacturer: GE=General Electric, GI=General Instruments,
ITT=Intermetal, Mot=Motorola, NEC=Nippon Electric Corp.
NS=National Semiconductors, Ph=Philips,
RCA=Radio Corporation of America, Ses=Sescosem,
SG=Silicon General, SGS=SGS/Ates, Sh=Shindengen,
Si=Siemens, St=Studer, Tf=Telefunken,
TI=Texas Instruments, Tr=Transitron, VaVaro

ORIG 86/09/03

PUBLISHED: 12/86

BASIS PCB 1.810.700–00/–81 GR20

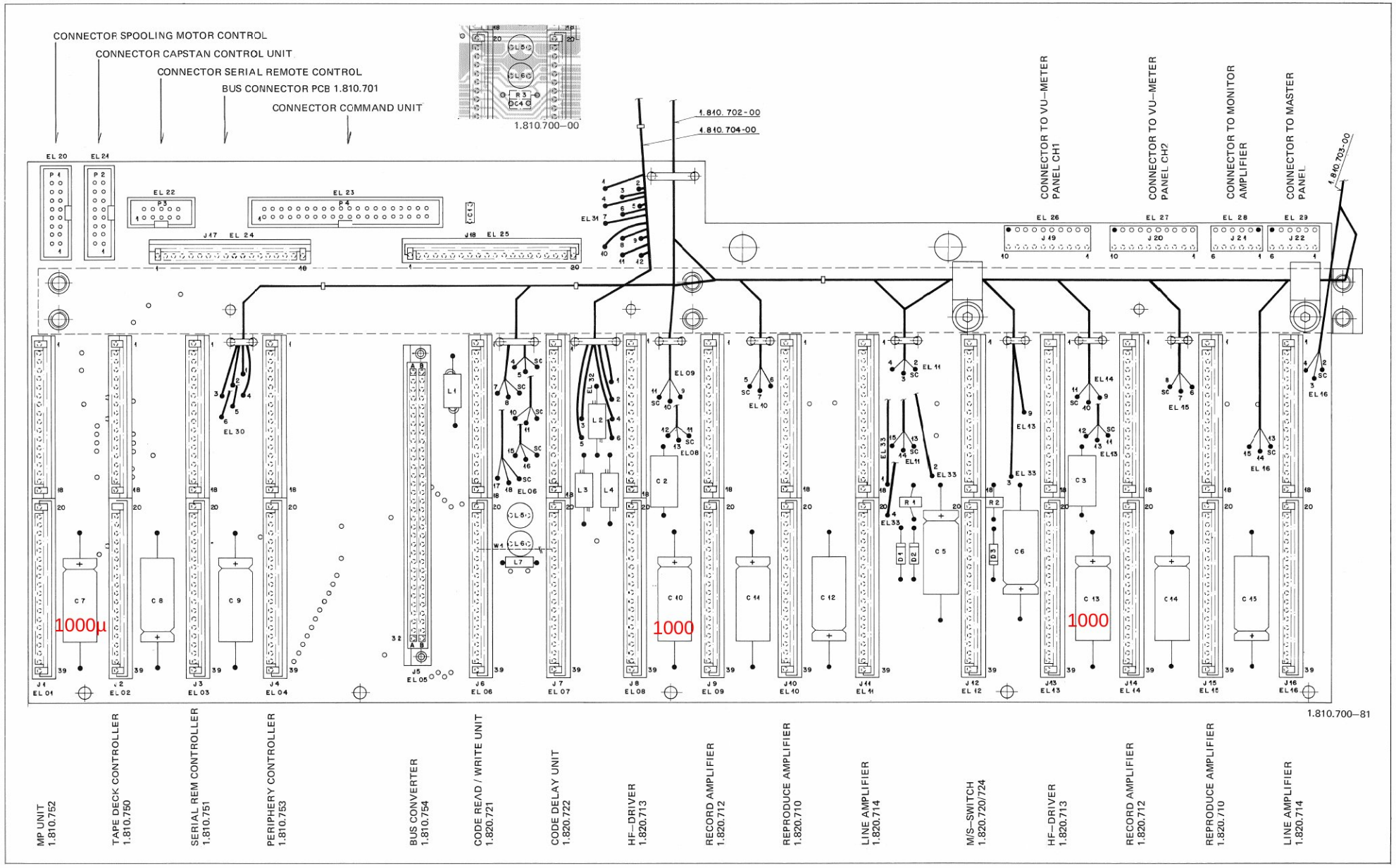

BASIS PCB 1.810.700–00 GR20

IND.	POS.NO.	PART NO.	VALUE	SPECIFICATIONS / EQUIVALENT	MANUF.
	C..0001	59.99.0205	68 nF	Ce	
	C..0002	59.04.9472	4.7 nF	5%. 630V. Ps	
	C..0003	59.04.9472	4.7 nF	5%. 630V. Ps	
	C..0004		not used		
	C..0005	59.25.3471	470 uF	20%. 16V. El	
	C..0006	59.25.3471	470 uF	20%. 16V. El	
	C..0007	59.25.1102	1000 uF	20%. 6.3V. El	
	C..0008	59.25.3471	470 uF	20%. 16V. El	
	C..0009	59.25.3471	470 uF	20%. 16V. El	
	C..0010	59.25.1102	1000 uF	20%. 6.3V. El	
	C..0011	59.25.3471	470 uF	20%. 16V. El	
	C..0012	59.25.3471	470 uF	20%. 16V. El	
	C..0013	59.25.1102	1000 uF	20%. 6.3V. El	
	C..0014	59.25.3471	470 uF	20%. 16V. El	
	C..0015	59.25.3471	470 uF	20%. 16V. El	
	D..0001	50.04.0122	1N4001	1N4002. 1N4003. 1N4004	Fc.Gl.Mot.Sol
	D..0002	50.04.0122	1N4001	1N4002. 1N4003. 1N4004	Fc.Gl.Mot.Sol
	D..0003	50.04.0122	1N4001	1N4002. 1N4003. 1N4004	Fc.Gl.Mot.Sol
	J..0001			18 + 20 contacts. see note 1	
	J..0002			18 + 20 contacts. see note 1	
	J..0003			18 + 20 contacts. see note 1	
	J..0004			18 + 20 contacts. see note 1	
	J..0005	54.11.2005		See note 2	
	J..0006			18 + 20 contacts. see note 1	
	J..0007			18 + 20 contacts. see note 1	
	J..0008			18 + 20 contacts. see note 1	
	J..0009			18 + 20 contacts. see note 1	
	J..0010			18 + 20 contacts. see note 1	
	J..0011			18 + 20 contacts. see note 1	
	J..0012			18 + 20 contacts. see note 1	
	J..0013			18 + 20 contacts. see note 1	
	J..0014			18 + 20 contacts. see note 1	
	J..0015			18 + 20 contacts. see note 1	
	J..0016			18 + 20 contacts. see note 1	
	J..0017	54.10.2015	18 cont.	Burncy Nr. GCSB 18 SO 19 V1 K9	

IND.	POS.NO.	PART NO.	VALUE	SPECIFICATIONS / EQUIVALENT	MANUF.
	J..0018	54.10.2026	20 cont.	Burndy Nr. GCSB 20 SO V1 K9	
	J..0019	54.01.0290	10 cont.	AMP Nr. 163.680-8	
	J..0020	54.01.0290	10 cont.	AMP Nr. 163.680-8	
	J..0021	54.01.0216	6 cont.	AMP Nr. 163.680-4	
	J..0022	54.01.0216	6 cont.	AMP Nr. 163.680-4	
	L..0001	62.01.0115		Interference coil. Philips Nr 4312 020 36700	
	L..0002	62.01.0115		Interference coil. Philips Nr 4312 020 36700	
	L..0003	62.01.0115		Interference coil. Philips Nr 4312 020 36700	
	L..0004	62.01.0115		Interference coil. Philips Nr 4312 020 36700	
	L..0005	62.02.2122	1.2 mH	See note 3	
	L..0006	62.02.2122	1.2 mH	See note 3	
	P..0001	54.14.2002	16 cont.	Yamaichi Nr. FAP-16-0824	
	P..0002	54.14.2002	16 cont.	Yamaichi Nr. FAP-16-0824	
	P..0003	54.14.2001	10 cont.	Yamaichi Nr. FAP-10-0824	
	P..0004	54.14.2004	40 cont.	Yamaichi Nr. FAP-40-0824	
	R..0001	51.99.0211	40 Ohm	See note 4	
	R..0002	51.99.0211	40 Ohm	See note 4	
	R..0003			Wire bridge	

Ce=Ceramic. Ps=Polystyrol. El=Electrolytic

Note 1 - 2 connectors:
18 contacts. Studer 54.10.2015. Burndy GCSB 18 SO 19 V1 K9
20 contacts. Studer 54.10.2026. Burndy GCSB 20 SO V1 K9

Note 2 - connector 2 * 32 contacts
Burndy Nr. PI 64 B 20 R 00 J 00
Philips Nr. 2422 025 89297
Erni Nr. 9722.543.616 STV-864F 4mm

Note 3 - TDK Nr. CSL 0812-122 J
Draloric Nr. KGSD 5.5/9 R5 1200uH 5%

Note 4 - PTC Resistor:
Philips Nr. 2322 661 91003
Siemens Nr. Q 63 100-P 390-13

ORIG 82/09/08

BASIS PCB 1.810.700–81 GR20

IND.	POS.NO.	PART NO.	VALUE	SPECIFICATIONS / EQUIVALENT	MANUF.
	C..0001	59.99.0205	68 nF	Ce	
	C..0002	59.04.9472	4.7 nF	5%. 630V. Ps	
	C..0003	59.04.9472	4.7 nF	5%. 630V. Ps	
	C..0004		not used		
	C..0005	59.25.3471	470 uF	20%. 16V. El	
	C..0006	59.25.3471	470 uF	20%. 16V. El	
	C..0007	59.25.1102	1000 uF	20%. 6.3V. El	
	C..0008	59.25.3471	470 uF	20%. 16V. El	
	C..0009	59.25.3471	470 uF	20%. 16V. El	
	C..0010	59.25.1102	1000 uF	20%. 6.3V. El	
	C..0011	59.25.3471	470 uF	20%. 16V. El	
	C..0012	59.25.3471	470 uF	20%. 16V. El	
	C..0013	59.25.1102	1000 uF	20%. 6.3V. El	
	C..0014	59.25.3471	470 uF	20%. 16V. El	
	C..0015	59.25.3471	470 uF	20%. 16V. El	
	D..0001	50.04.0122	1N4001	1N4002. 1N4003. 1N4004	Fc.Gl.Mot.Sol
	D..0002	50.04.0122	1N4001	1N4002. 1N4003. 1N4004	Fc.Gl.Mot.Sol
	D..0003	50.04.0122	1N4001	1N4002. 1N4003. 1N4004	Fc.Gl.Mot.Sol
	J..0001			18 + 20 contacts. see note 1	
	J..0002			18 + 20 contacts. see note 1	
	J..0003			18 + 20 contacts. see note 1	
	J..0004			18 + 20 contacts. see note 1	
	J..0005	54.11.2005		See note 2	
	J..0006			18 + 20 contacts. see note 1	
	J..0007			18 + 20 contacts. see note 1	
	J..0008			18 + 20 contacts. see note 1	
	J..0009			18 + 20 contacts. see note 1	
	J..0010			18 + 20 contacts. see note 1	
	J..0011			18 + 20 contacts. see note 1	
	J..0012			18 + 20 contacts. see note 1	
	J..0013			18 + 20 contacts. see note 1	
	J..0014			18 + 20 contacts. see note 1	
	J..0015			18 + 20 contacts. see note 1	
	J..0016			18 + 20 contacts. see note 1	
	J..0017	54.10.2015	18 cont.	Burndy Nr. GCSB 18 SO 19 V1 K9	

IND.	POS.NO.	PART NO.	VALUE	SPECIFICATIONS / EQUIVALENT	MANUF.
	J..0018	54.10.2026	20 cont.	Burndy Nr. GCSB 20 SO V1 K9	
	J..0019	54.01.0290	10 cont.	AMP Nr. 163.680-8	
	J..0020	54.01.0290	10 cont.	AMP Nr. 163.680-8	
	J..0021	54.01.0216	6 cont.	AMP Nr. 163.680-4	
	J..0022	54.01.0216	6 cont.	AMP Nr. 163.680-4	
	L..0001	62.01.0115		Interference coil. Philips Nr 4312 020 36100	
	L..0002	62.01.0115		Interference coil. Philips Nr 4312 020 36100	
	L..0003	62.01.0115		Interference coil. Philips Nr 4312 020 36100	
	L..0004	62.01.0115		Interference coil. Philips Nr 4312 020 36100	
	L..0005	62.02.2122	1.2 mH	See note 3	
	L..0006	62.02.2122	1.2 mH	See note 3	
	L..0007	62.01.0115		Interference coil. Philips Nr 4312 020 36100	
	P..0001	54.14.2002	16 cont.	Yamaichi Nr. FAP-16-0824	
	P..0002	54.14.2002	16 cont.	Yamaichi Nr. FAP-16-0824	
	P..0003	54.14.2001	10 cont.	Yamaichi Nr. FAP-10-0824	
	P..0004	54.14.2004	40 cont.	Yamaichi Nr. FAP-40-0824	
	R..0001	57.99.0211	40 Ohm	See note 4	
	R..0002	57.99.0211	40 Ohm	See note 4	
	R..0003		not used		
	W..0001	1.010.108.64		Wire bridge	

Ce=Ceramic. Ps=Polystyrol. El=Electrolytic

Note 1 - 2 connectors:
18 contacts. Studer 54.10.2015. Burndy GCSB 18 SO 19 V1 K9
20 contacts. Studer 54.10.2026. Burndy GCSB 20 SO V1 K9

Note 2 - connector 2 * 32 contacts
Burndy Nr. PI 64 B 20 R 00 J 00
Philips Nr. 2422 025 89297
Erni Nr. 9722.543.616 STV-864F 4mm

Note 3 - TDK Nr. CSL 0812-122 J
Draloric Nr. KGSD 5.5/9 R5 1200uH 5%

Note 4 - PTC Resistor:
Philips Nr. 2322 661 91003
Siemens Nr. Q 63 100-P 390-13

ORIG 84/07/26

BUS CONNECTOR PCB 1.810.701–00 GR25

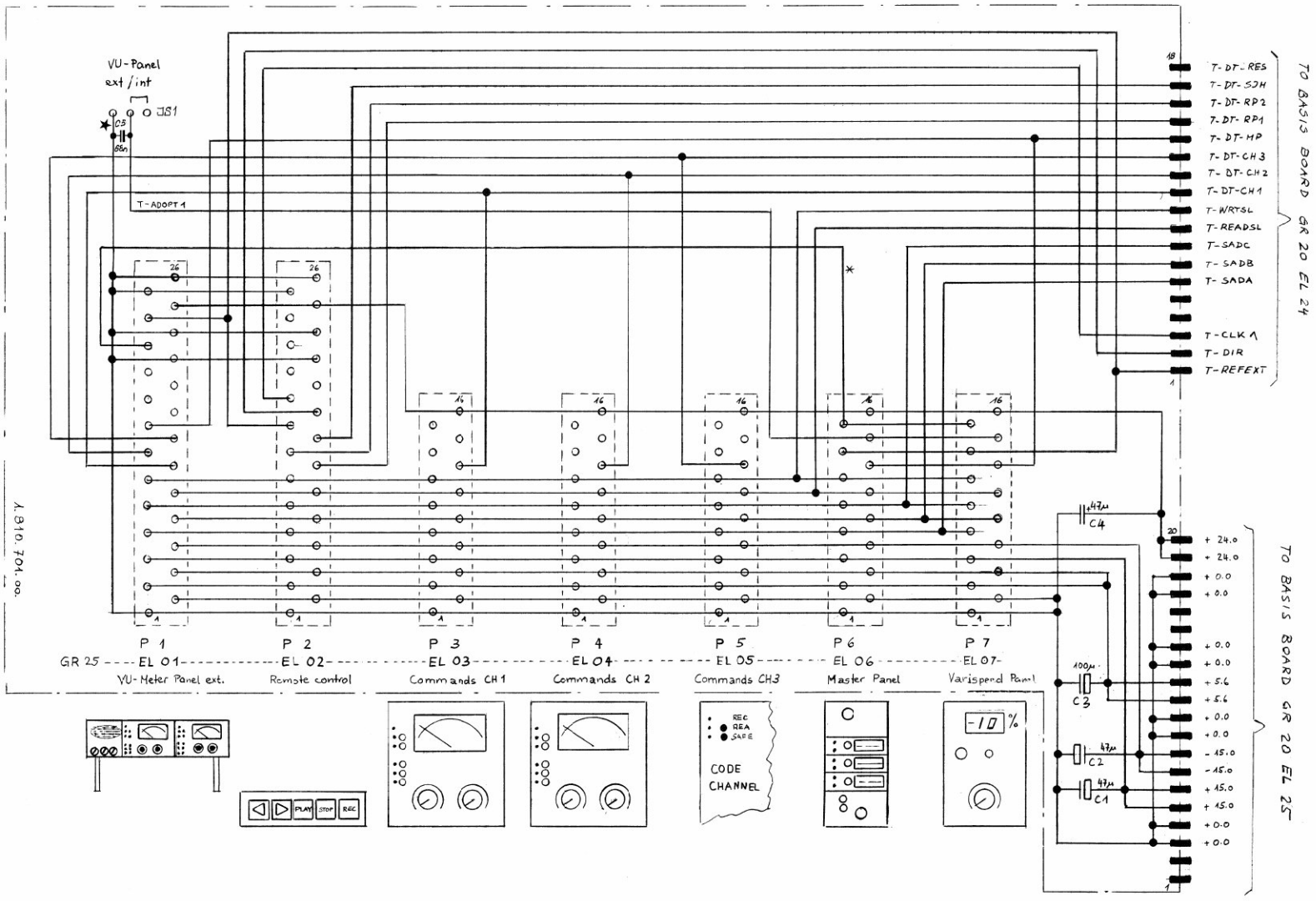

✶ HAS BEEN MODIFIED

BUS CONNECTOR PCB 1.810.701–00 GR25

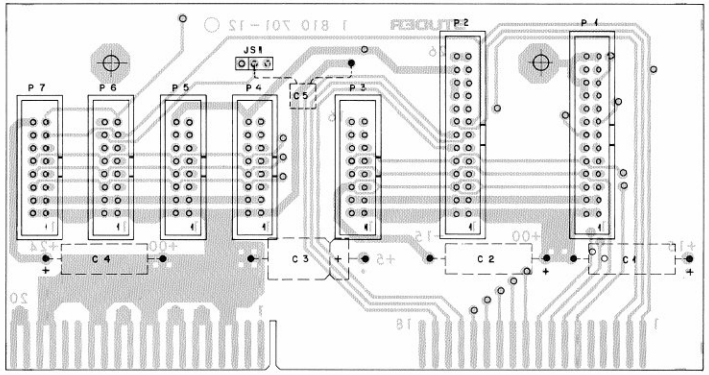

PLUGGED INTO BASIS PCB 1.810.700–00

GR20 EL25 GR20 EL24

IND.	POS.NO.	PART NO.	VALUE	SPECIFICATIONS / EQUIVALENT	MANUF.
	C..0001	59.25.4470	47 uF	-10%, 25V, El	
	C..0002	59.25.4470	47 uF	-10%, 25V, El	
	C..0003	59.25.3101	100 uF	-10%, 16V, El	
	C..0004	59.25.4470	47 uF	-10%, 25V, El	
(01)	C..0005	59.99.0246	68 nF	Ce	
	JS.0001			See note 1	
	P..0001	54.14.2003	26 cont.	Yamaichi Nr. FAP-26-0824	
	P..0002	54.14.2003	26 cont.	Yamaichi Nr. FAP-26-0824	
	P..0003	54.14.2002	16 cont.	Yamaichi Nr. FAP-16-0824	
	P..0004	54.14.2002	16 cont.	Yamaichi Nr. FAP-16-0824	
	P..0005	54.14.2002	16 cont.	Yamaichi Nr. FAP-16-0824	
	P..0006	54.14.2002	16 cont.	Yamaichi Nr. FAP-16-0824	
	P..0007	54.14.2002	16 cont.	Yamaichi Nr. FAP-16-0824	

(01) 83/06/29 Rejection of crosstalk from wire T-REFEXT in jumper-position VU Panel internal.

Note 1 - Contact pin: Studer 54.01.0020
Philips 2422 025 89303
Berg 75 160-102-36
Bridge: Studer 54.01.0021
Philips 2422 024 88003
Berg 65 474-001

Ce=Ceramic capacitor; El=Electrolytic capacitor

ORIG 81/08/21 (01) 83/06/29

S T U D E R (01) 83/06/29 PB BUS CONNECTOR BOARD 1.810.701.00 PAGE 1

MP UNIT A810 PCB 1.810.752–00 GR20 EL1 "ESE"

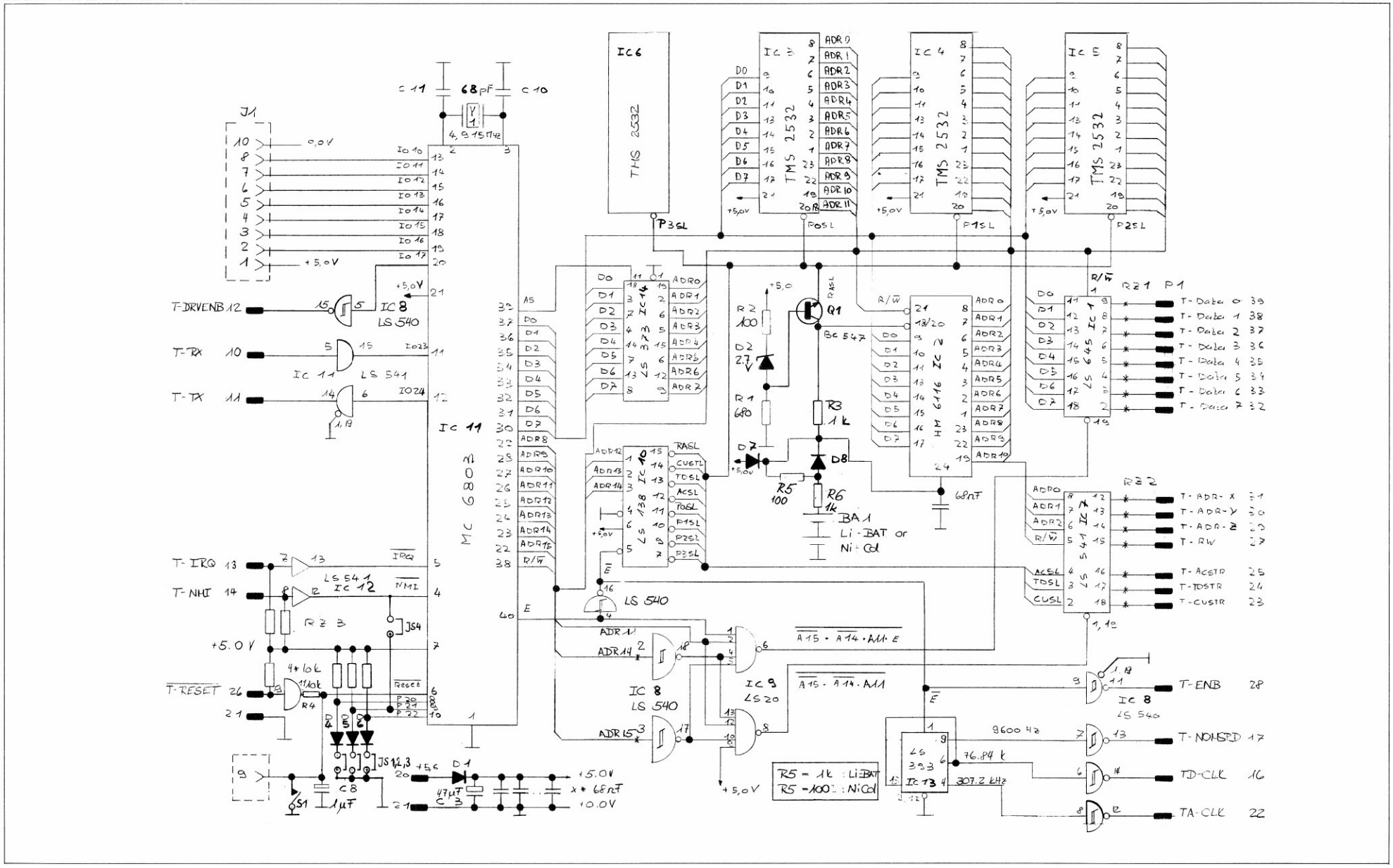

MP UNIT A810 PCB 1.810.752–00 GR20 EL1 "ESE"

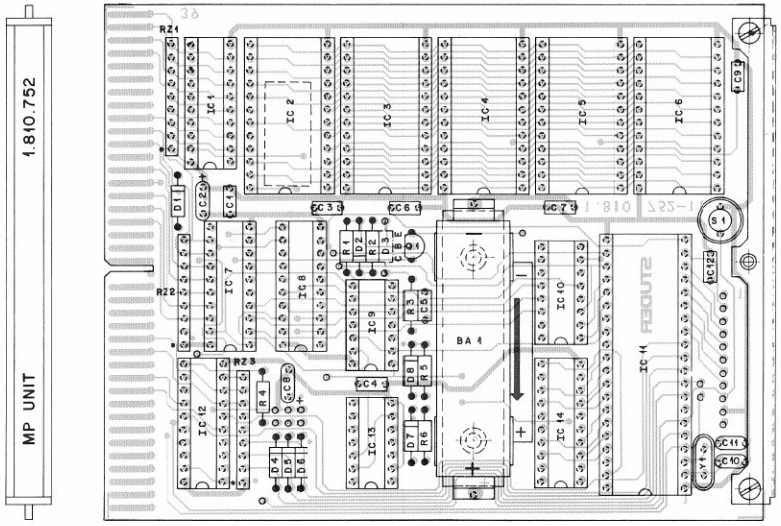

IND.	POS.NO.	PART NO.	VALUE	SPECIFICATIONS / EQUIVALENT	MANUF.
	BA.0001	89.01.0273		See note 1	
	C..0001	59.99.0205	68 nF	Ce	
	C..0002	59.26.0473	47 uF	-20%, 6.3V, Sal	
	C..0003	59.99.0205	68 nF	Ce	
	C..0004	59.99.0205	68 nF	Ce	
	C..0005	59.99.0205	68 nF	Ce	
	C..0006	59.99.0205	68 nF	Ce	
	C..0007	59.99.0205	68 nF	Ce	
	C..0008	59.26.9109	1 uF	-20%, 40V, Sal	
	C..0009	59.99.0205	68 nF	Ce	
	C..0010	59.32.0100	10 pF	5%, 63V, Ce	
	C..0011	59.32.0100	10 pF	5%, 63V, Ce	
	C..0012	59.99.0205	68 nF	Ce	
	D..0001	50.04.0512	1N5818	1N5819	Mot
	D..0002	50.04.1106	2.7 V Z	ZPD 2.7	ITT
	D..0003		not used		
	D..0004	50.04.0125	1N4448		ITT,Ph,Ses,TI
	D..0005	50.04.0125	1N4448		ITT,Ph,Ses,TI
	D..0006	50.04.0125	1N4448		ITT,Ph,Ses,TI
	D..0007	50.04.0125	1N4448		ITT,Ph,Ses,TI
	D..0008	50.04.0125	1N4448		ITT,Ph,Ses,TI
	IC.0001	50.06.0645	SN74LS645N		TI,Mot
	IC.0002	50.14.0107	HM6116LP-4	HM6116LP-3, MSM5128-12RS	Hi,OK
	IC.0003			Note 2, Software 1 A810 $4000 R5201	St
	IC.0004			Note 2, Software 2 A810 $5000 R5202	St
	IC.0005			Note 2, Software 3 A810 $6000 R5203	St
	IC.0006			Note 2, Software 4 A810 $7000 R5204	St
	IC.0007	50.06.0541	74LS541PC	SN74LS541N	Fc,Mot,TI
	IC.0008	50.06.0540	74LS540PC	SN74LS540N	Fc,Mot,TI
	IC.0009	50.06.0020	N74LS 20N	SN74LS 20N	Sig,TI
	IC.0010	50.06.0138	SN74LS138N	SN74LS138N	AMI,TI
	IC.0011	50.16.0107	MC6803G-1	HD6803P-1	Hi,Mot
	IC.0012	50.06.0541	74LS541PC	SN74LS541N	Fc,Mot,TI
	IC.0013	50.06.0393	SN74LS393N		TI

IND.	POS.NO.	PART NO.	VALUE	SPECIFICATIONS / EQUIVALENT	MANUF.
	IC.0014	50.06.0373	N74LS373N		Sig,TI
	Q..0001	50.03.0508	MPS2369	BSX20	Mot,Ph
	R..0001	57.11.4221	220 Ohm	2%	
	R..0002	57.11.4101	100 Ohm		
	R..0003	57.11.4102	1 kOhm		
	R..0004	57.11.4103	10 kOhm		
	R..0005	57.11.4101	100 Ohm		
	R..0006	57.11.4102	1 kOhm		
	RZ.0001	57.88.4332		See note 3	
	RZ.0002	57.88.4332		See note 3	
	RZ.0003	57.88.4332		See note 3	
	S..0001	55.03.0122	switch	Impulse -, Chicago Switch Nr. 34-550-001	
	XBA0001	89.01.0262		Battery holder, Keystone mod. 4000	
	XBA0002	89.01.0262		Battery holder, Keystone mod. 4000	
	Y..0001	89.01.0553		Quartz 4.915 MHz, +-100 ppm	

IND.	POS.NO.	PART NO.	VALUE	SPECIFICATIONS / EQUIVALENT	MANUF.

Note 1 - NiCd Battery, 1.25 V
Varta Nr. 3-100 R5 / 396.0108.011
General Electric Nr. 4L 8 901 CD 32

Note 2 - IC 3/4/5/6 are delivered in a Soft Ware Set:
1.100.520.00 Version Date 46/82
1.100.520.81 Version Date 7/83

Note 3 - Network 8 * 3.3 kOhm
Sicoweed Nr. CON * 3.3k J
Ineltro Nr. R8 3.3K 5%

Ce=Ceramic, Sal=Solid aluminium,

MANUFACTURER: AMI=American Microsystem Inc., Fc=Fairchild,
Hi=Hitachi, ITT=Intermetall, Mot=Motorola,
OK=OKI, Ph=Philips, Ses=Sescosem, Sig=Signetics,
St=Studer, TI=Texas Instruments

ORIG 82/03/18

MP UNIT A810 PCB 1.820.780–00 GR20 EL1 "ESE" (MP UNIT PCB WITHOUT SOFTWARE: 1.820.752–00)

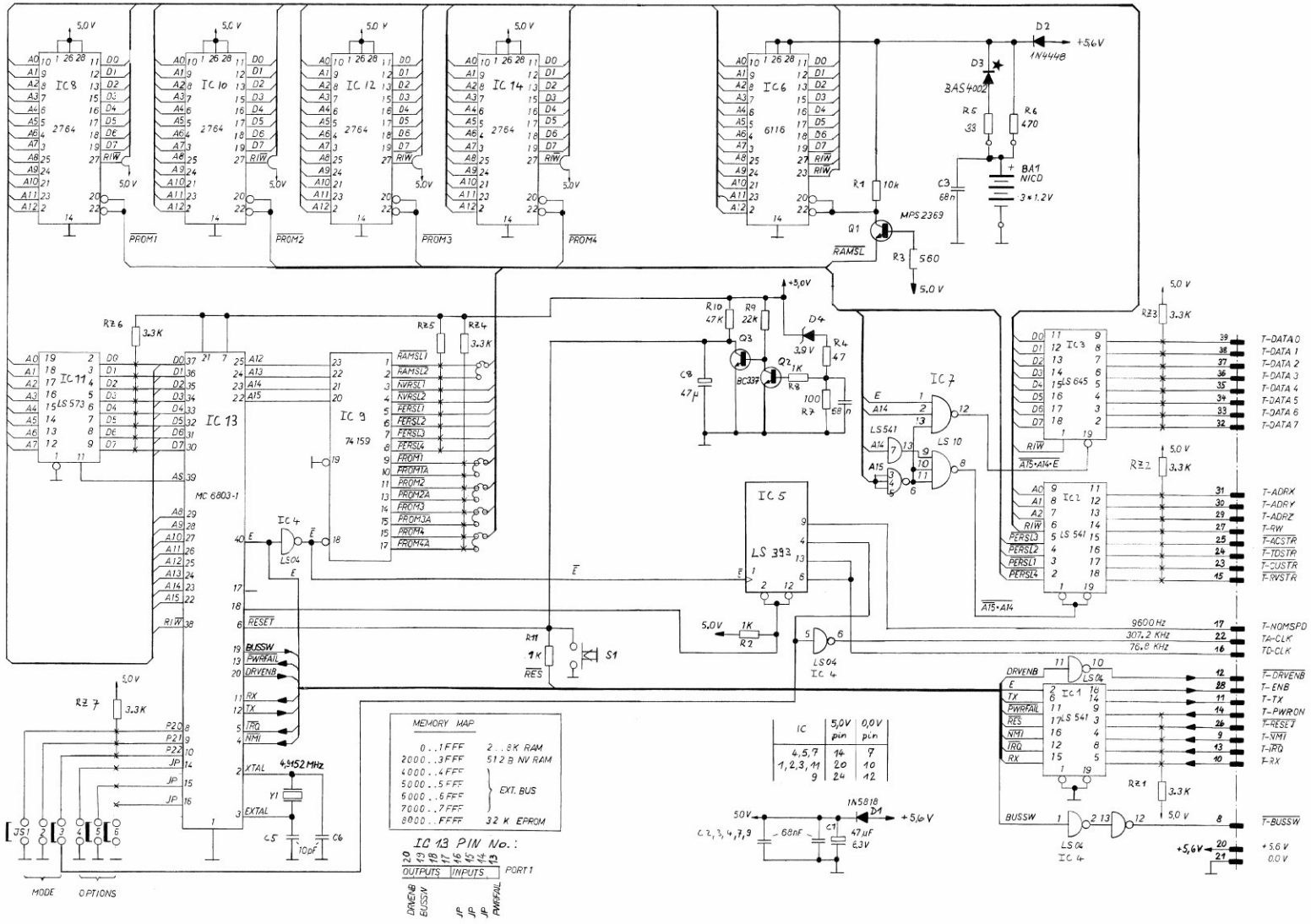

★ HAS BEEN MODIFIED

MP UNIT A810 PCB 1.820.780–00 GR20 EL1 "ESE" (MP UNIT PCB WITHOUT SOFTWARE: 1.820.752–00)

COMPONENT SIDE

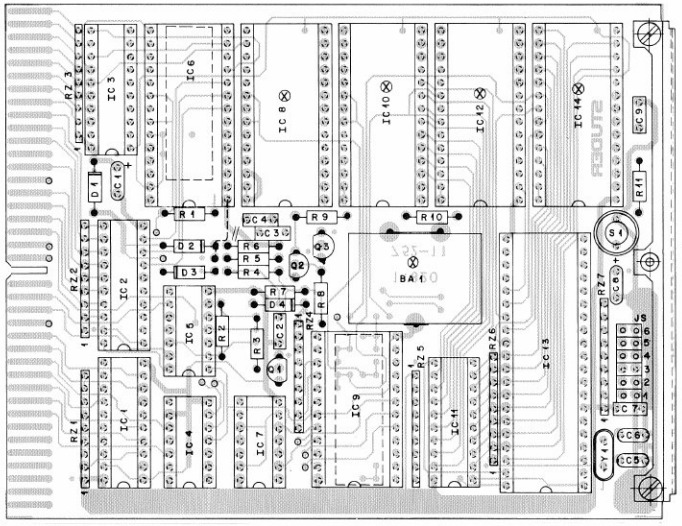

MP UNIT A810 PCB 1.820.780–81 GR 20 "ESE" (MP UNIT PCB WITHOUT SOFTWARE : 1.820.752–81/–82)

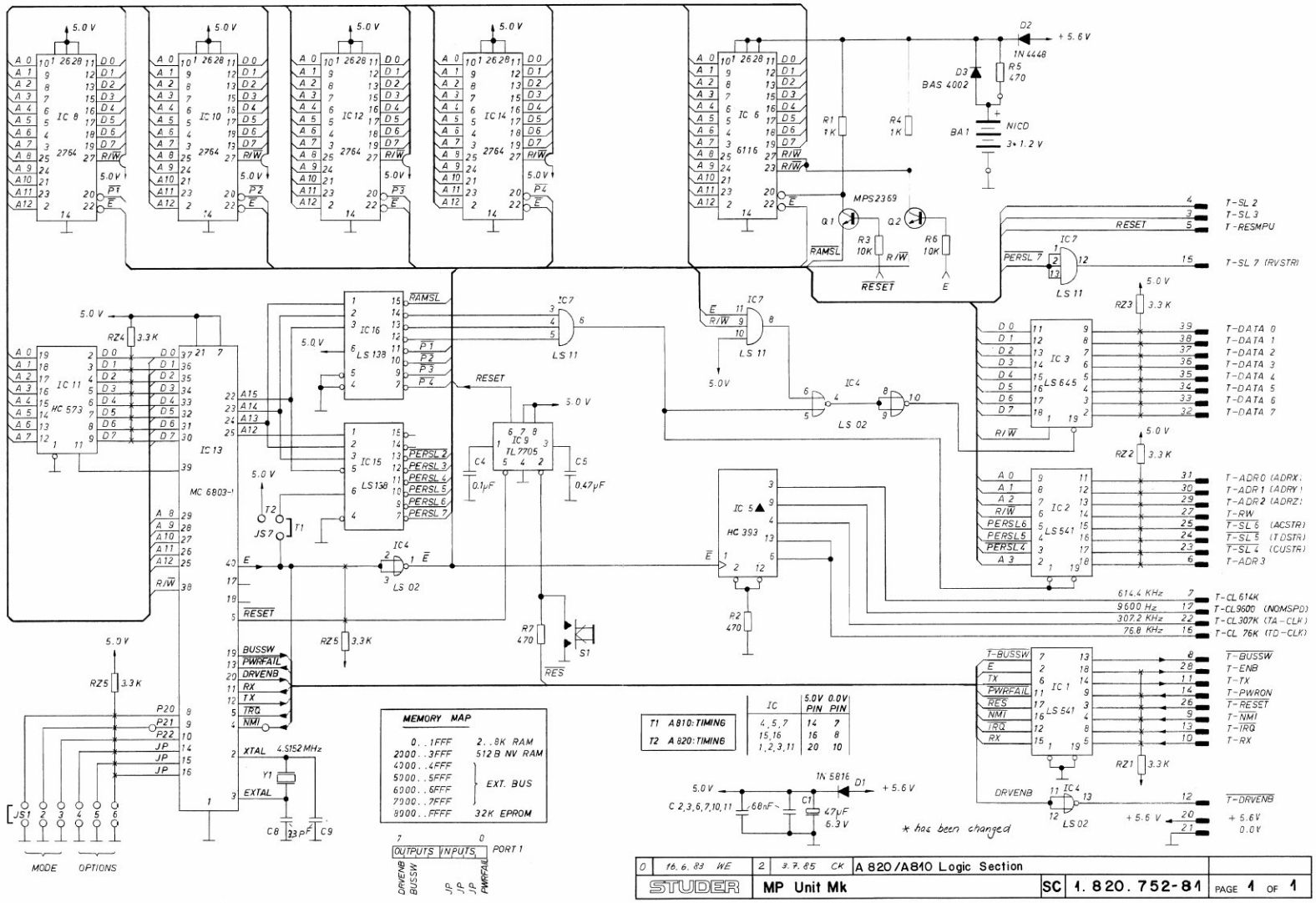

0	16.6.83 WE	2	3.7.85 CK	A 820/A810 Logic Section		
STUDER	MP Unit Mk			SC	1.820.752-81	PAGE 1 OF 1

MP UNIT A810 PCB 1.820.780–81 GR 20 EL 1"ESE" (MP UNIT PCB WITHOUT SOFTWARE: 1.820.752–81/–82)

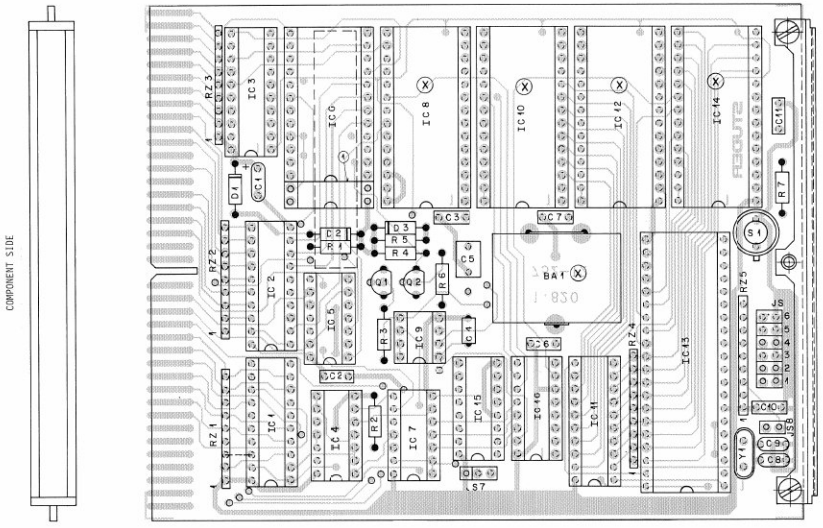

IND.	POS.NO.	PART NO.	VALUE	SPECIFICATIONS / EQUIVALENT	MANUF.
	B4.0001	89.01.0274		See note 1	
	C..0001	59.26.0470	47 uF	20%, 6.3V, Sal	Ph
	C..0002	59.99.0205	68 nF	-20%, Ce	
	C..0003	59.99.0205	68 nF	-20%, Ce	
	C..0004	59.06.0104	0.1 uF	10%,	
	C..0005	59.06.0474	0.47 uF	10%,	
	C..0006	59.99.0205	68 nF	-20%, Ce	
	C..0007	59.99.0205	68 nF	-20%, Ce	
	C..0008	59.34.1150	15 pF	5%, Ce	
	C..0009	59.34.1150	15 pF	5%, Ce	
	C..0010	59.99.0205	68 nF	-20%, Ce	
	C..0011	59.99.0205	68 nF	-20%, Ce	
	D..0001	50.04.0512	1N5818	1N5819	Mot
	D..0002	50.04.0125	1N4448		ITT,Ph,Ses,TI
	D..0003	50.04.0127	BAS4002	BAT85	Sie
	IC.0001	50.06.0541	74LS541PC	SN74LS541N	Fc,Mot,TI
	IC.0002	50.06.0541	74LS541PC	SN74LS541N	Fc,Mot,TI
	IC.0003	50.06.0645	SN74LS645N		TI,Mot
	IC.0004	50.06.0002	74LS 02PC	SN74LS 02N, N74LS 02N	Sig,TI
(00)	IC.0005	50.06.0393	SN74LS393N	"	TI
(01)	IC.0005	50.17.1393	MC74HC393N	PCF74HC393P, MM74HC393N	Ph,Mot,NS,RCA
	IC.0006	50.14.0107	HM6116LP-3	HM6116LP-3, MSM5128-12RS	Hi,OK
	IC.0007	50.06.0011	74LS 11PC	SN74LS 11N, N74LS 11N	Sig,TI
	IC.0008			See note 2	
	IC.0009	50.11.0122	TL7705CP		TI
	IC.0010			See note 2	
(00)	IC.0011	50.06.1573	74LS573PC	SN74LS573AN	Fc,TI
(02)	IC.0011	50.17.1573	MC74HC573N	PC74HC573P, MM74HC573N	Ph,Mot,NS,RCA
	IC.0012			See note 2	
	IC.0013	50.16.0107	MC6803G-1	HD6803P-1	Hi,Mot
	IC.0014			See note 2	
	IC.0015	50.06.0138	74LS138PC	SN74LS138N	TI
	IC.0016	50.06.0138	74LS138PC	SN74LS138N	TI

S T U D E R (02) 85/07/03 PB MP UNIT WITHOUT SOFTWARE 1.820.752.81 PAGE 1

IND.	POS.NO.	PART NO.	VALUE	SPECIFICATIONS / EQUIVALENT	MANUF.
	B4.0001	89.01.0274		See note 1	
	C..0001	59.26.0470	47 uF	20%, 6.3V, Sal	Ph
	C..0002	59.99.0205	68 nF	-20%, Ce	
	C..0003	59.99.0205	68 nF	-20%, Ce	
	C..0004	59.06.0104	0.1 uF	10%,	
	C..0005	59.06.0474	0.47 uF	10%,	
	C..0006	59.99.0205	68 nF	-20%, Ce	
	C..0007	59.99.0205	68 nF	-20%, Ce	
	C..0008	59.34.2330	33 pF	5%, Ce	
	C..0009	59.34.2330	33 pF	5%, Ce	
	C..0010	59.99.0205	68 nF	-20%, Ce	
	C..0011	59.99.0205	68 nF	-20%, Ce	
	D..0001	50.04.0512	1N5818	1N5819	Mot
	D..0002	50.04.0125	1N4448		ITT,Ph,Ses,TI
	D..0003	50.04.0127	BAS4002	BAT85	Sie
	IC.0001	50.06.0541	74LS541PC	SN74LS541N	Fc,Mot,TI
	IC.0002	50.06.0541	74LS541PC	SN74LS541N	Fc,Mot,TI
	IC.0003	50.06.0645	SN74LS645N		TI,Mot
	IC.0004	50.06.0002	74LS 02PC	SN74LS 02N, N74LS 02N	Sig,TI
	IC.0005	50.17.1393	MC74HC393N	PCF74HC393P, MM74HC393N	Ph,Mot,NS,RCA
	IC.0006	50.14.0107	HM6116LP-4	HM6116LP-3, MSM5128-12RS	Hi,OK
	IC.0007	50.06.0011	74LS 11PC	SN74LS 11N, N74LS 11N	Sig,TI
	IC.0008			See note 2	
	IC.0009	50.11.0122	TL7705CP		TI
	IC.0010			See note 2	
	IC.0011	50.17.1573	MC74HC573N	PC74HC573P, MM74HC573N	Ph,Mot,NS,RCA
	IC.0012			See note 2	
	IC.0013	50.16.0107	MC6803G-1	HD6803P-1	Hi,Mot
	IC.0014			See note 2	
	IC.0015	50.06.0138	74LS138PC	SN74LS138N	TI
	IC.0016	50.06.0138	74LS138PC	SN74LS138N	TI
	JS.0001			See note 3	
	JS.0002			See note 3	

S T U D E R (00) 85/08/20 FIA MP UNIT WITHOUT SOFTWARE 1.820.752.82 PAGE 1

IND.	POS.NO.	PART NO.	VALUE	SPECIFICATIONS / EQUIVALENT	MANUF.
	JS.0001			See note 3	
	JS.0002			See note 3	
	JS.0003			See note 3	
	JS.0004			See note 3	
	JS.0005			See note 3	
	JS.0006			See note 3	
	JS.0007			See note 3	
	JS.0008			See note 3	
	Q..0001	50.03.0508	MPS2369	BSX20	Mot,Ph
	Q..0002	50.03.0508	MPS2369	BSX20	Mot,Ph
	R..0001	57.11.4102	1 kOhm	2%	
	R..0002	57.11.4471	470 Ohm	2%	
	R..0003	57.11.4103	10 kOhm	2%	
	R..0004	57.11.4102	1 kOhm	2%	
	R..0005	57.11.4471	470 Ohm	2%	
	R..0006	57.11.4103	10 kOhm	2%	
	R..0007	57.11.4471	470 Ohm	2%	
	RZ.0001	57.88.4332	3.3 kOhm	See note 4	
	RZ.0002	57.88.4332	3.3 kOhm	See note 4	
	RZ.0003	57.88.4332	3.3 kOhm	See note 4	
	RZ.0004	57.88.4332	3.3 kOhm	See note 4	
	RZ.0005	57.88.4332	3.3 kOhm	See note 4	
	S..0001	55.03.0122	Switch	Impulse -, Chicago Switch Nr. 34-550-001	
	Y..0001	89.01.0553		Quartz 4.9152 MHz, +-100 ppm	

S T U D E R (02) 85/07/03 PB MP UNIT WITHOUT SOFTWARE 1.820.752.81 PAGE 2

IND.	POS.NO.	PART NO.	VALUE	SPECIFICATIONS / EQUIVALENT	MANUF.
	JS.0003			See note 3	
	JS.0004			See note 3	
	JS.0005			See note 3	
	JS.0006			See note 3	
	JS.0007			See note 3	
	JS.0008			See note 3	
	Q..0001	50.03.0508	MPS2369	BSX20	Mot,Ph
	Q..0002	50.03.0508	MPS2369	BSX20	Mot,Ph
	R..0001	57.11.4102	1 kOhm	2%	
	R..0002	57.11.4471	470 Ohm	2%	
	R..0003	57.11.4103	10 kOhm	2%	
	R..0004	57.11.4102	1 kOhm	2%	
	R..0005	57.11.4471	470 Ohm	2%	
	R..0006	57.11.4103	10 kOhm	2%	
	R..0007	57.11.4471	470 Ohm	2%	
	RZ.0001	57.88.4332	3.3 kOhm	See note 4	
	RZ.0002	57.88.4332	3.3 kOhm	See note 4	
	RZ.0003	57.88.4332	3.3 kOhm	See note 4	
	RZ.0004	57.88.4332	3.3 kOhm	See note 4	
	RZ.0005	57.88.4332	3.3 kOhm	See note 4	
	S..0001	55.03.0122	Switch	Impulse -, Chicago Switch Nr. 34-550-001	
	Y..0001	89.01.0560		Quartz 4.915200 MHz, +-100 ppm	

S T U D E R (00) 85/08/20 FIA MP UNIT WITHOUT SOFTWARE 1.820.752.82 PAGE 2

IND.	POS.NO.	PART NO.	VALUE	SPECIFICATIONS / EQUIVALENT	MANUF.
	IC.0008		not used		
	IC.0010			See note 1, Software 2 A810 R5212	St
	IC.0012			See note 1, Software 3 A810 R5213	St
	IC.0014			See note 1, Software 4 A810 R5214	St

Note 1 - IC (8)-10-12-14 are delivered in a set 1.100.521-00

*** ALL OTHER POSITIONS SEE POSITION LIST 1.820.752.00 ***

MANUFACTURER: St=Studer

DRIG 82/11/11

S T U D E R (00) 82/11/11 PB MP UNIT A 810 1.820.780.00 PAGE 1

IND.	POS.NO.	PART NO.	VALUE	SPECIFICATIONS / EQUIVALENT	MANUF.

(01) 84.02.27 Elimination of jitter of auxiliary clock signals.
(02) 85.07.03 Improved thermal stability of demultiplexer IC 11.

Note 1 - NiCd Battery: Varta Nr. 53009 303 059 / 3-100 DKO S.SLF *8*

Note 2 - IC 8/10/12/14: Software see Position List of actual MP Unit with software

Note 3 - Contact pin: Studer Nr. 54.01.0020
Berg Nr. 75 160-102-36
Philips Nr. 2422 025 89303
Bridge: Studer Nr. 54.01.0021
Berg Nr. 65 474-001
Philips Nr. 2422 024 88003

Note 4 - Network: 8 * 3.3 kOhm, 5%
Sicoweld Nr. C09 x 3.3 k J
Ineltro Nr. R88 3.3 k 5%

Ce=Ceramic, Sal=Solid Aluminium

MANUFACTURER: Fc=Fairchild, Hi=Hitachi, ITT=Intermetall, Mot=Motorola, NEC=Nippon Electronic Corp., NS=National Semiconductors, OK=OKI, Ph=Philips, RCA=Radio Corporation of America, Ses=Sescosem, Sig=Signetics, Tf=Telefunken, TI=Texas Instruments.

DRIG 83/11/10 (01) 84/02/27 (02) 85/07/03

S T U D E R (02) 85/07/03 PB MP UNIT WITHOUT SOFTWARE 1.820.752.81 PAGE 3

IND.	POS.NO.	PART NO.	VALUE	SPECIFICATIONS / EQUIVALENT	MANUF.

(01) 84.02.27 Elimination of jitter of auxiliary clock signals.
(02) 85.07.03 Improved thermal stability of demultiplexer IC 11.

Note 1 - NiCd Battery: Varta Nr. 53039 303 059 / 3-100 DKO S.SLF *8*

Note 2 - IC 8/10/12/14: Software see Position List of actual MP Unit with software

Note 3 - Contact pin: Studer Nr. 54.01.0020
Berg Nr. 75 160-102-36
Philips Nr. 2422 025 89303
Bridge: Studer Nr. 54.01.0021
Berg Nr. 65 474-001
Philips Nr. 2422 024 88003

Note 4 - Network: 8 * 3.3 kOhm, 5%
Sicoweld Nr. C09 x 3.3 k J
Ineltro Nr. R88 3.3 k 5%

Ce=Ceramic, Sal=Solid Aluminium

MANUFACTURER: Fc=Fairchild, Hi=Hitachi, ITT=Intermetall, Mot=Motorola, NEC=Nippon Electronic Corp., NS=National Semiconductors, OK=OKI, Ph=Philips, RCA=Radio Corporation of America, Ses=Sescosem, Sig=Signetics, Tf=Telefunken, TI=Texas Instruments.

DRIG 85/08/20

S T U D E R (00) 85/08/20 FIA MP UNIT WITHOUT SOFTWARE 1.820.752.82 PAGE 3

MP UNIT MK 1.810.780.22

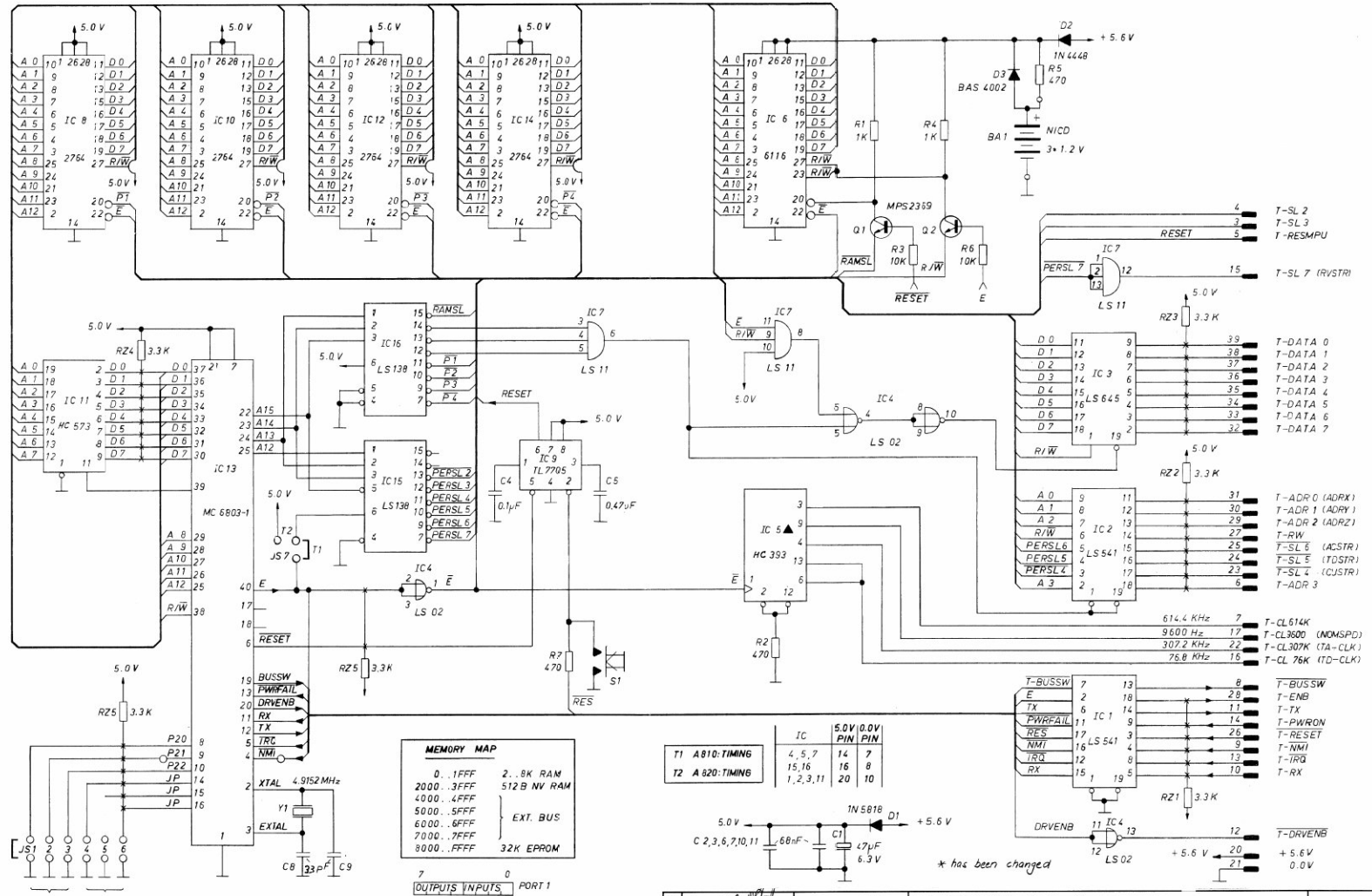

MP UNIT MK 1.810.780.22

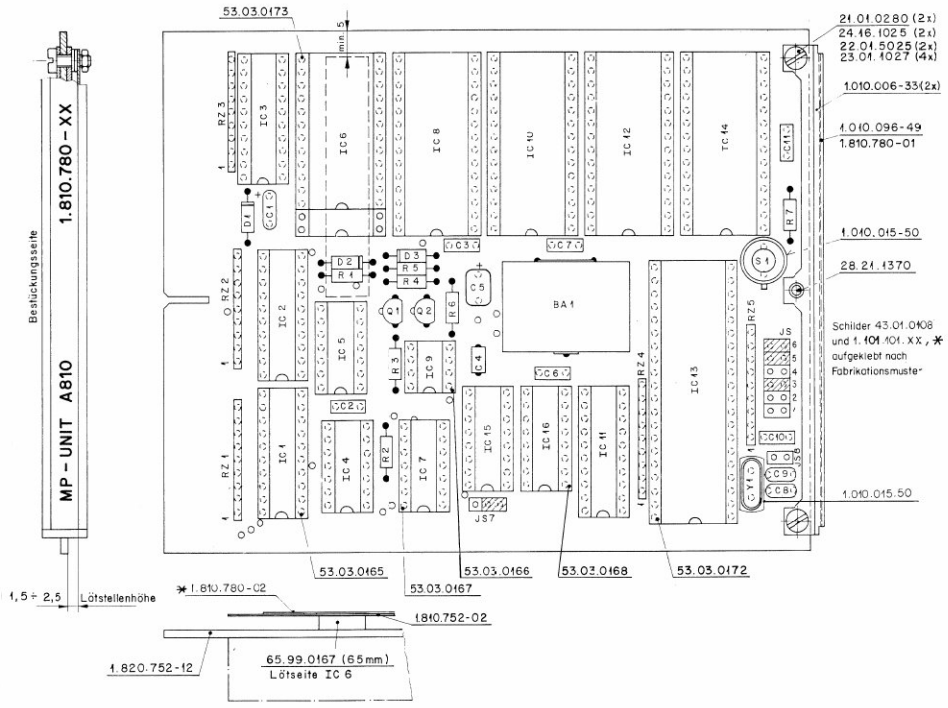

INS.	POS.NO.	PART NO.	VALUE	SPECIFICATIONS / EQUIVALENT	MANUF.
(20)	BA....1	89.01.0274		See note 1	
(20)	C.....1	59.26.0470	47 uF	20%, 6.3V, Sal	Ph
(20)	C.....2	59.99.0205	68 nF	-20%, Ce	
(20)	C.....3	59.99.0205	68 nF	-20%, Ce	
(20)	C.....4	59.06.0104	0.1 uF	10%,	
(20)	C.....5	59.26.2100	10 uF	20%, 16V, Sal	
(20)	C.....6	59.99.0205	68 nF	-20%, Ce	
(20)	C.....7	59.99.0205	68 nF	-20%, Ce	
(20)	C.....8	59.34.2330	33 pF	5%, Ce	
(20)	C.....9	59.34.2330	33 pF	5%, Ce	
(20)	C....10	59.99.0205	68 nF	-20%, Ce	
(20)	C....11	59.99.0205	68 nF	-20%, Ce	
(20)	D.....1	50.04.0512	1N5818	1N5819	Mot
(20)	D.....2	50.04.0125	1N4448		ITT,Ph,Sea,TI
(20)	D.....3	50.04.0127	BAS4002	BAT85	Sie
(20)	IC....1	50.06.0541	74LS541PC	SN74LS541N	Fe,Mot,TI
(20)	IC....2	50.06.0541	74LS541PC	SN74LS541N	Fe,Mot,TI
(20)	IC....3	50.06.0645	SN74LS645N		TI,Mot
(20)	IC....4	50.06.0002	74LS 02PC	SN74LS 02N, N74LS 02N	Sig,TI
(20)	IC....5	50.17.1393	MC74HC393N	PC374HC393P, MM74HC393N	Ph,Mot,NS,RCA
(20)	IC....6	50.14.0107	HM6116LP-4	HM6116LP-3, HSM5128-12RS	Hi,OK
(20)	IC....7	50.06.0011	74LS 11PC	SN74LS 11N, N74LS 11N	Sig,TI
(20)	IC....8		not used		
(20)	IC....9	50.11.0122	TL770SCP		TI
(20)	IC...10	50.14.0113	D 2764-3	TMS2764-25JL, M2764 F 1	It,TI,SGS
(20)	IC...10			See note 2	
(21)	IC...10			See note 2	
(22)	IC...10			See note 2	
(20)	IC...11	50.17.1573	MC74HC573N	PC74HC573P, MM74HC573N	Ph,Mot,NS,RCA
(00)	IC...12	50.14.0113	D 2764-3	TMS2764-25JL, M2764 F 1	It,TI,SGS
(20)	IC...12			See note 2	
(21)	IC...12			See note 2	
(22)	IC...12			See note 2	
(20)	IC...13	50.16.0107	MC68030-1	HS6803P-1	Hi,Mot

INS.	POS.NO.	PART NO.	VALUE	SPECIFICATIONS / EQUIVALENT	MANUF.
(00)	IC...14	50.14.0113	D 2764-3	TMS2764-25JL, M2764 F 1	It,TI,SGS
(20)	IC...14			See note 2	
(21)	IC...14			See note 2	
(22)	IC...14			See note 2	
(20)	IC...15	50.06.0138	74LS138PC	SN74LS138N	TI
(20)	IC...16	50.06.0138	74LS138PC	SN74LS138N	TI
(20)	JS....1			See note 3	
(20)	JS....2			See note 3	
(20)	JS....3			See note 3	
(20)	JS....4			See note 3	
(20)	JS....5			See note 3	
(20)	JS....6			See note 3	
(20)	JS....7			See note 3	
(20)	JS....8			See note 3	
(20)	Q.....1	50.03.0508	MPS2369	BSX20	Mot,Ph
(20)	Q.....2	50.03.0508	MPS2369	BSX20	Mot,Ph
(20)	R.....1	57.11.4102	1 kOhm	2%	
(20)	R.....2	57.11.4471	470 Ohm	2%	
(20)	R.....3	57.11.4103	10 kOhm	2%	
(20)	R.....4	57.11.4102	1 kOhm	2%	
(20)	R.....5	57.11.4471	470 Ohm	2%	
(20)	R.....6	57.11.4103	10 kOhm	2%	
(20)	R.....7	57.11.4471	470 Ohm	2%	
(20)	RZ....1	57.88.4332	3.3 kOhm	See note 4	
(20)	RZ....2	57.88.4332	3.3 kOhm	See note 4	
(20)	RZ....3	57.88.4332	3.3 kOhm	See note 4	
(20)	RZ....4	57.88.4332	3.3 kOhm	See note 4	
(20)	RZ....5	57.88.4332	3.3 kOhm	See note 4	
(20)	S.....1	55.03.0122	Switch	Impulse -, Chicago Switch Nr. 34-550-001	
(20)	Y.....1	89.01.0560		Quartz 4,915200 MHz, +-100 ppm	

INS.	POS.NO.	PART NO.	VALUE	SPECIFICATIONS / EQUIVALENT	MANUF.

(20) 21.03.86 PCB lay-out 1.820.752-12

(21) 18.06.86 Software 1.810.999.21

(22) 10.12.87 Software 1.810.999.22

Note 1 - NiCd Battery: Varta Nr. 53009 303 059 / 3-100 DKO S.SLF +8+

Note 2 - IC 10/12/14: Software is delivered in a set only.

(20) Software 40/85, Studer Nr. 1.810.999.20
(21) Software 25/86, Studer Nr. 1.810.999.21
(22) Software 01/88, Studer Nr. 1.810.999.22

Note 3 - Contact pin: Studer Nr. 54.01.0020
Berg Nr. 75 160-102-36
Philips Nr. 2422 025 89303
Bridge: Studer Nr. 54.01.0021
Berg Nr. 65 474-001
Philips Nr. 2422 024 88003

Note 4 - Network: 8 * 3.3 kOhm, 5%
Sieverd Nr. C09 x 3.3 k J
Ineltro Nr. 888 3.3 k 5%

Ce=Ceramic, Sal=Solid Aluminium

MANUFACTURER: Fe=Fairchild, Hi=Hitachi, ITT=Intermetall, Mot=Motorola,
NEC=Nippon Electronic Corp., NS=National Semiconductors,
OK=OKI, Ph=Philips, RCA=Radio Corporation of America,
Sea=Seesea, Sig=Signetics, TI=Telefunken,
TI=Texas Instruments.

ORIG 86/03/21 (20) 86/03/21 (21) 86/06/18 (22) 87/12/10

TAPE DECK CONTROLLER PCB 1.810.750–00/–81 GR20 EL2

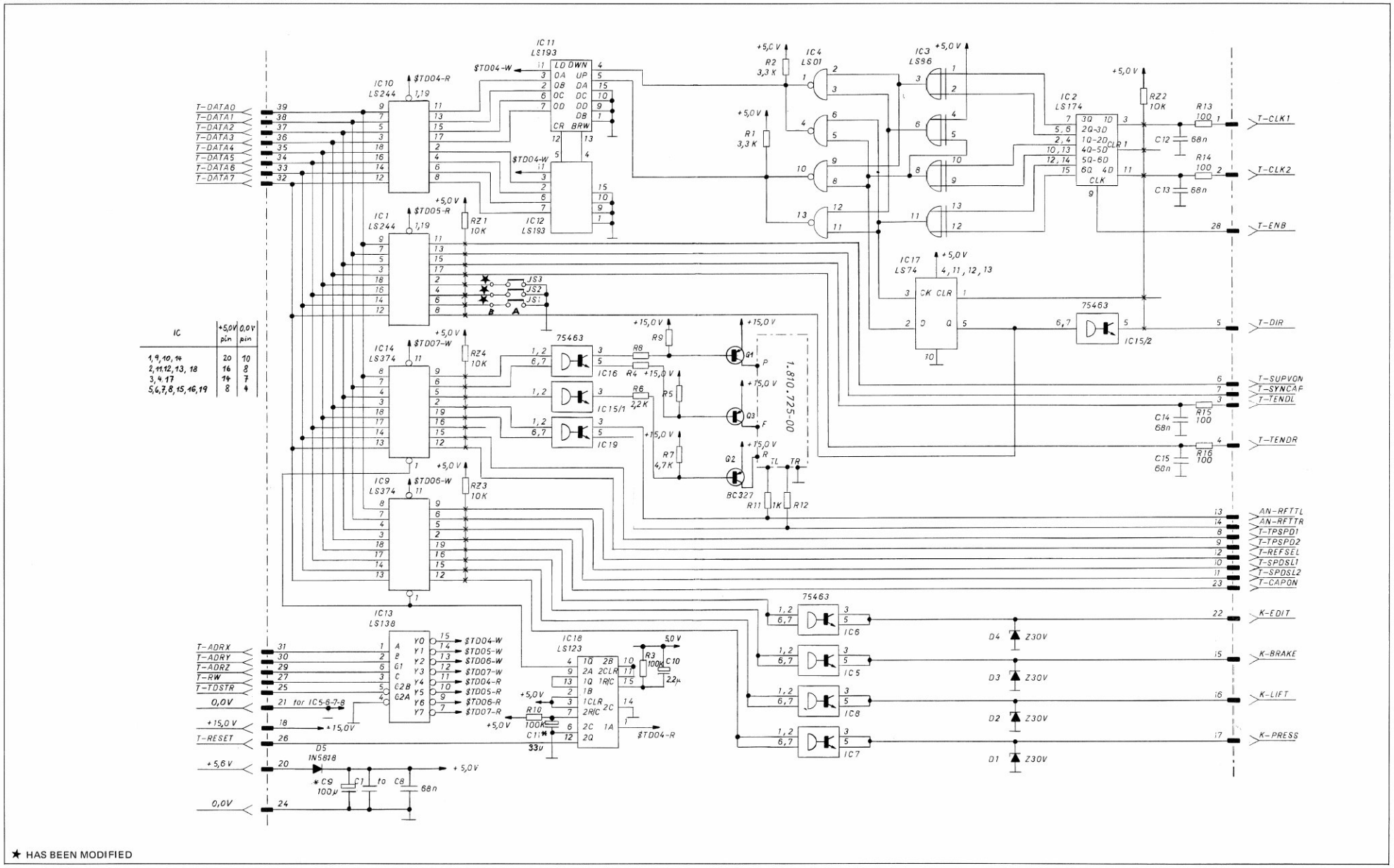

TAPE DECK CONTROLLER PCB 1.810.750–00 GR20 EL2

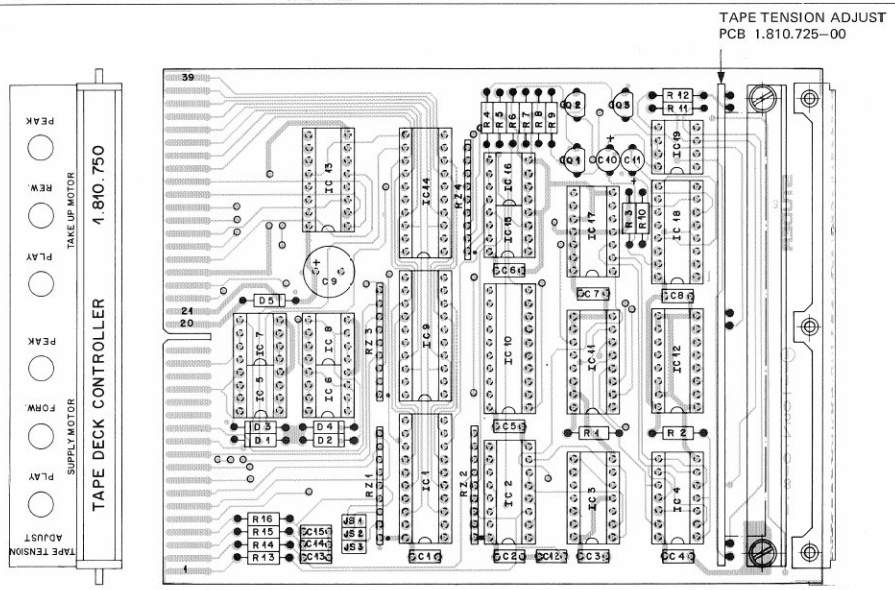

IND.	POS.NO.	PART NO.	VALUE	SPECIFICATIONS / EQUIVALENT	MANUF.
	C..0001	59.99.0205	68 nF	Ce	
	C..0002	59.99.0205	68 nF	Ce	
	C..0003	59.99.0205	68 nF	Ce	
	C..0004	59.99.0205	68 nF	Ce	
	C..0005	59.99.0205	68 nF	Ce	
	C..0006	59.99.0205	68 nF	Ce	
	C..0007	59.99.0205	68 nF	Ce	
	C..0008	59.99.0205	68 nF	Ce	
(00)	C..0009	59.22.3101	100 uF	10%, 10V, El	
(01)	C..0009	59.22.5101	100 uF	10%, 25V, El	
	C..0010	59.26.5229	2.2 uF	20%, 25V, Sal	Ph
(00)	C..0011	59.26.5229	2.2 uF	20%, 25V, Sal	Ph
(02)	C..0011	59.26.1330	33 uF	20%, 10V, Sal	Ph
	C..0012	59.99.0205	68 nF	Ce	
	C..0013	59.99.0205	68 nF	Ce	
	C..0014	59.99.0205	68 nF	Ce	
	C..0015	59.99.0205	68 nF	Ce	
	D..0001	50.04.1125	30 V Z	ZPD 30	ITT
	D..0002	50.04.1125	30 V Z	ZPD 30	ITT
	D..0003	50.04.1125	30 V Z	ZPD 30	ITT
	D..0004	50.04.1125	30 V Z	ZPD 30	ITT
	D..0005	50.04.0512	1N5818	1N5819	Mot
	IC.0001	50.06.0244	74LS244	SN74LS244N	AMI,MM,Mot,TI
	IC.0002	50.06.0174	N74LS174N	SN74LS174N	Sig,TI
	IC.0003	50.06.0086	N74LS 86N	SN74LS 86N	Sig,TI
	IC.0004	50.06.0001	N74LS 01N	SN74LS 01N	Sig,TI
	IC.0005	50.05.0203	SN75463PS	N75463JG, SN55463JG, DS3613N	NS,TI
	IC.0006	50.05.0203	SN75463PS	N75463JG, SN55463JG, DS3613N	NS,TI
	IC.0007	50.05.0203	SN75463PS	N75463JG, SN55463JG, DS3613N	NS,TI
	IC.0008	50.05.0203	SN75463PS	N75463JG, SN55463JG, DS3613N	NS,TI
	IC.0009	50.06.0374	DM74LS374	SN74LS374N	NS,TI
	IC.0010	50.06.0244	74LS244	SN74LS244N	AMI,MM,Mot,TI
	IC.0011	50.06.0193	N74LS193N	SN74LS193N	Sig,TI
	IC.0012	50.06.0193	N74LS193N	SN74LS193N	Sig,TI
	IC.0013	50.06.0138	SN74LS138N		AMI,TI

S T U D E R (02) 83/03/03 PB TAPE DECK CONTROLLER 1.810.750.00 PAGE 1

IND.	POS.NO.	PART NO.	VALUE	SPECIFICATIONS / EQUIVALENT	MANUF.
	IC.0014	50.06.0374	DM74LS374	SN74LS374N	NS,TI
	IC.0015	50.05.0203	SN75463PS	N75463JG, SN55463JG, DS3613N	NS,TI
	IC.0016	50.05.0203	SN75463PS	N75463JG, SN55463JG, DS3613N	NS,TI
	IC.0017	50.06.0074	N74LS 74AN	SN74LS 74N	Sig,TI
	IC.0018	50.06.0123	SN74LS123N		TI
	IC.0019	50.05.0203	SN75463PS	N75463JG, SN55463JG, DS3613N	NS,TI
	J5.0001			See note 1	
	J5.0002			See note 1	
	J5.0003			See note 1	
	Q..0001	50.03.0351	BC327-25		ITT,NEC,Phs,Sie,Tf
	Q..0002	50.03.0351	BC327-25		ITT,NEC,Phs,Sie,Tf
	Q..0003	50.03.0351	BC327-25		ITT,NEC,Phs,Sie,Tf
	R..0001	57.11.4332	3.3 kOhm		
	R..0002	57.11.4332	3.3 kOhm		
	R..0003	57.11.4104	100 kOhm		
	R..0004	57.11.4222	2.2 kOhm		
	R..0005	57.11.4472	4.7 kOhm		
	R..0006	57.11.4222	2.2 kOhm		
	R..0007	57.11.4472	4.7 kOhm		
	R..0008	57.11.4222	2.2 kOhm		
	R..0009	57.11.4472	4.7 kOhm		
	R..0010	57.11.4104	100 kOhm		
	R..0011	57.11.4102	1 kOhm		
	R..0012	57.11.4102	1 kOhm		
	R..0013	57.11.4101	100 Ohm		
	R..0014	57.11.4101	100 Ohm		
	R..0015	57.11.4101	100 Ohm		
	R..0016	57.11.4101	100 Ohm		
	RZ.0001	1.010.014.57		Network 8 * 10 kOhm	
	RZ.0002	1.010.014.57		Network 8 * 10 kOhm	
	RZ.0003	1.010.014.57		Network 8 * 10 kOhm	
	RZ.0004	1.010.014.57		Network 8 * 10 kOhm	

S T U D E R (02) 83/03/03 PB TAPE DECK CONTROLLER 1.810.750.00 PAGE 2

IND.	POS.NO.	PART NO.	VALUE	SPECIFICATIONS / EQUIVALENT	MANUF.
	(01) 82/09/10 improved reliability of C 9 (higher nom. voltage)				
	(02) 83/03/03 prolongation of reset time.				
	Note 1 - Contact pin: Studer 54.01.0020, Berg 75 160-102-36				
	Bridge: Studer 54.01.0021, Philips 2422 024 88003				
	Ce=Ceramic, El=Electrolytic, Sal=Solid aluminium				
	MANUFACTURER: AMI=American Microsystem Inc., ITT=Intermetall, MM=Monolitic Memories Inc., Mot=Motorola, NEC=Nippon Electric Corp., NS=National Semiconductors, Phs=Philips, Sie=Siemens, Sig=Signetics, Tf=Telefunken, TI=Texas Instruments				

ORIG 82/03/18 (01) 82/09/10 (02) 83/03/03

S T U D E R (02) 83/03/03 PB TAPE DECK CONTROLLER 1.810.750.00 PAGE 3

TAPE DECK CONTROLLER PCB 1.810.750–81 GR20 EL2

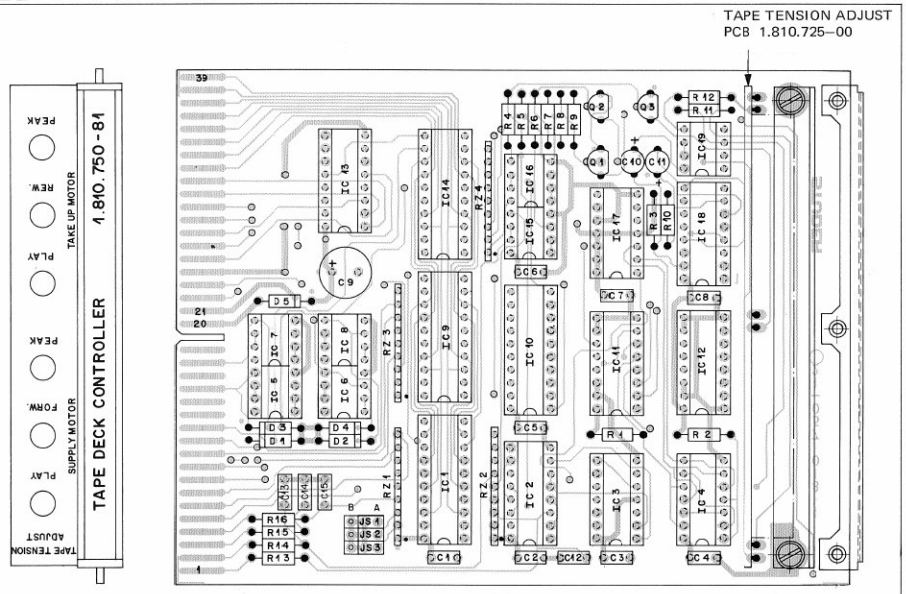

IND.	POS.NO.	PART NO.	VALUE	SPECIFICATIONS / EQUIVALENT	MANUF.
	C..0001	59.99.0205	68 nF	Ce	
	C..0002	59.99.0205	68 nF	Ce	
	C..0003	59.99.0205	68 nF	Ce	
	C..0004	59.99.0205	68 nF	Ce	
	C..0005	59.99.0205	68 nF	Ce	
	C..0006	59.99.0205	68 nF	Ce	
	C..0007	59.99.0205	68 nF	Ce	
	C..0008	59.99.0205	68 nF	Ce	
	C..0009	59.22.5101	100 uF	10%, 25V, El	
	C..0010	59.26.5229	2.2 uF	20%, 25V, Sal	Ph
	C..0011	59.26.1330	33 uF	20%, 10V, Sal	Ph
	C..0012	59.99.0205	68 nF	Ce	
	C..0013	59.99.0205	68 nF	Ce	
	C..0014	59.99.0205	68 nF	Ce	
	C..0015	59.99.0205	68 nF	Ce	
	D..0001	50.04.1125	30 V Z	ZPD 30	ITT
	D..0002	50.04.1125	30 V Z	ZPD 30	ITT
	D..0003	50.04.1125	30 V Z	ZPD 30	ITT
	D..0004	50.04.1125	30 V Z	ZPD 30	ITT
	D..0005	50.04.0512	1N5818	1N5819	Mot
	IC.0001	50.06.0244	74LS244	SN74LS244N	AMI,MM,Mot,TI
	IC.0002	50.06.0174	N74LS174N	SN74LS174N	Sig,TI
	IC.0003	50.06.0086	N74LS 86N	SN74LS 86N	Sig,TI
	IC.0004	50.06.0001	N74LS 01N	SN74LS 01N	Sig,TI
	IC.0005	50.05.0203	SN75463PS	N75463JG, SN55463JG, DS3613N	NS,TI
	IC.0006	50.05.0203	SN75463PS	N75463JG, SN55463JG, DS3613N	NS,TI
	IC.0007	50.05.0203	SN75463PS	N75463JG, SN55463JG, DS3613N	NS,TI
	IC.0008	50.05.0203	SN75463PS	N75463JG, SN55463JG, DS3613N	NS,TI
	IC.0009	50.06.0374	DM74LS374	SN74LS374N	NS,TI
	IC.0010	50.06.0244	74LS244	SN74LS244N	AMI,MM,Mot,TI
	IC.0011	50.06.0193	N74LS193N	SN74LS193N	Sig,TI
	IC.0012	50.06.0193	N74LS193N	SN74LS193N	Sig,TI
	IC.0013	50.06.0138	SN74LS138N		AMI,TI
	IC.0014	50.06.0374	DM74LS374	SN74LS374N	NS,TI
	IC.0015	50.05.0203	SN75463PS	N75463JG, SN55463JG, DS3613N	NS,TI

S T U D E R (00) 83/08/10 PB TAPE DECK CONTROLLER 1.810.750.81 PAGE 1

IND.	POS.NO.	PART NO.	VALUE	SPECIFICATIONS / EQUIVALENT	MANUF.
	IC.0016	50.05.0203	SN75463PS	N75463JG, SN55463JG, DS3613N	NS,TI
	IC.0017	50.06.0074	N74LS 74AN	SN74LS 74N	Sig,TI
	IC.0018	50.06.0123	SN74LS123N		TI
	IC.0019	50.05.0203	SN75463PS	N75463JG, SN55463JG, DS3613N	NS,TI
	J5.0001			See note 1	
	J5.0002			See note 1	
	J5.0003			See note 1	
	Q..0001	50.03.0351	BC327-25		ITT,NEC,Phs,Sie,Tf
	Q..0002	50.03.0351	BC327-25		ITT,NEC,Phs,Sie,Tf
	Q..0003	50.03.0351	BC327-25		ITT,NEC,Phs,Sie,Tf
	R..0001	57.11.4332	3.3 kOhm		
	R..0002	57.11.4332	3.3 kOhm		
	R..0003	57.11.4104	100 kOhm		
	R..0004	57.11.4222	2.2 kOhm		
	R..0005	57.11.4472	4.7 kOhm		
	R..0006	57.11.4222	2.2 kOhm		
	R..0007	57.11.4472	4.7 kOhm		
	R..0008	57.11.4222	2.2 kOhm		
	R..0009	57.11.4472	4.7 kOhm		
	R..0010	57.11.4104	100 kOhm		
	R..0011	57.11.4102	1 kOhm		
	R..0012	57.11.4102	1 kOhm		
	R..0013	57.11.4101	100 Ohm		
	R..0014	57.11.4101	100 Ohm		
	R..0015	57.11.4101	100 Ohm		
	R..0016	57.11.4101	100 Ohm		
	RZ.0001	1.010.014.57		Network 8 * 10 kOhm	
	RZ.0002	1.010.014.57		Network 8 * 10 kOhm	
	RZ.0003	1.010.014.57		Network 8 * 10 kOhm	
	RZ.0004	1.010.014.57		Network 8 * 10 kOhm	

S T U D E R (00) 83/08/10 PB TAPE DECK CONTROLLER 1.810.750.81 PAGE 2

IND.	POS.NO.	PART NO.	VALUE	SPECIFICATIONS / EQUIVALENT	MANUF.
	Note 1 - Contact pin: Studer			54.01.0020	
		Philips		2422 025 89303	
		Berg		75 160-102-36	
	Bridge: Studer			54.01.0021	
		Philips		2422 024 88003	
		Berg		65 474-001	
		AMP		141 767-1	
	Ce=Ceramic, El=Electrolytic, Sal=Solid aluminium				
	MANUFACTURER: AMI=American Microsystem Inc., ITT=Intermetall, MM=Monolitic Memories Inc., Mot=Motorola, NEC=Nippon Electric Corp., NS=National Semiconductors, Phs=Philips, Sie=Siemens, Sig=Signetics, Tf=Telefunken, TI=Texas Instruments				

ORIG 83/08/10

S T U D E R (00) 83/08/10 PB TAPE DECK CONTROLLER 1.810.750.81 PAGE 3

TAPE TENSION ADJUST PCB 1.810.725–00

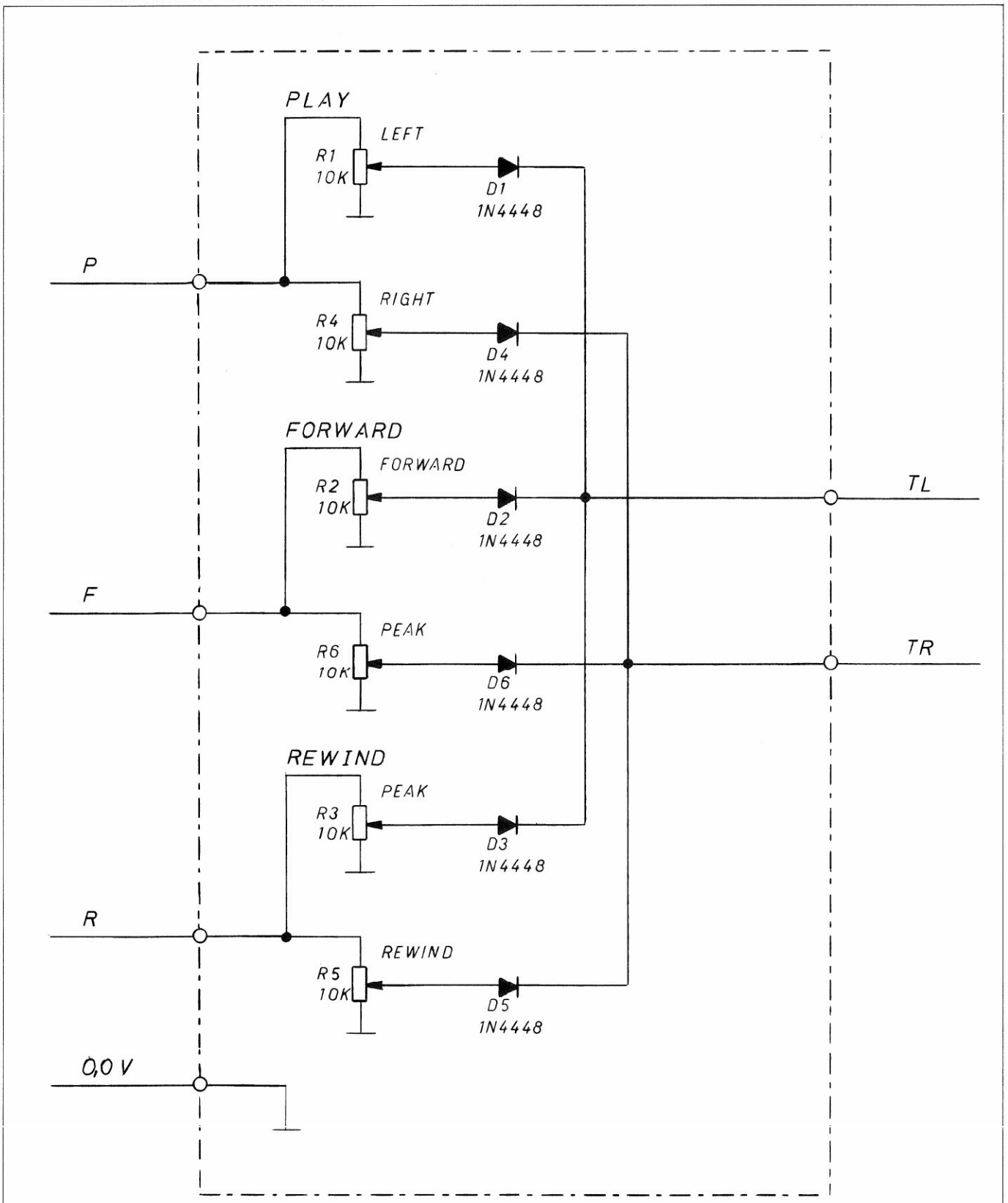

SOLDERED ONTO TAPE DECK CONTROLLER PCB 1.810.750–00

TAPE TENSION ADJUST PCB 1.810.725–00

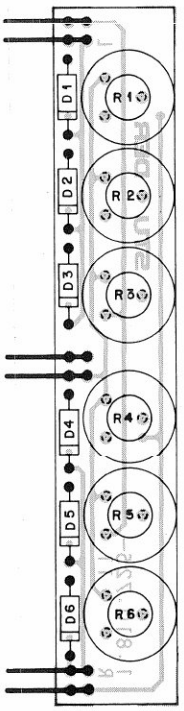

SOLDERED ONTO TAPE DECK CONTROLLER PCB 1.810.750–00

IND.	POS.NO.	PART NO.	VALUE	SPECIFICATIONS / EQUIVALENT	MANUF.
	D..0001	50.04.0125	1N4448		ITT,Ph,Ses,TI
	D..0002	50.04.0125	1N4448		ITT,Ph,Ses,TI
	D..0003	50.04.0125	1N4448		ITT,Ph,Ses,TI
	D..0004	50.04.0125	1N4448		ITT,Ph,Ses,TI
	D..0005	50.04.0125	1N4448		ITT,Ph,Ses,TI
	D..0006	50.04.0125	1N4448		ITT,Ph,Ses,TI
	R..0001	58.01.5103	10 kOhm	Pot., lin., Allen Bradley Nr. YR 103 M	
	R..0002	58.01.5103	10 kOhm	Pot., lin., Allen Bradley Nr. YR 103 M	
	R..0003	58.01.5103	10 kOhm	Pot., lin., Allen Bradley Nr. YR 103 M	
	R..0004	58.01.5103	10 kOhm	Pot., lin., Allen Bradley Nr. YR 103 M	
	R..0005	58.01.5103	10 kOhm	Pot., lin., Allen Bradley Nr. YR 103 M	
	R..0006	58.01.5103	10 kOhm	Pot., lin., Allen Bradley Nr. YR 103 M	
	P..0001	54.01.0222	6 cont.	AMP Nr. 163.740-4	

MANUFACTURER: ITT=Intermetall, Ph=Philips, Ses=Sescosem,
TI=Texas Instruments

ORIG 81/10/14

S T U D E R 81/10/14 DSC TAPE TENSION ADJUST A810 1.810.725.00 PAGE 1

COMMAND UNIT PCB 1.810.734–00 GR21 (LCD) "ESE"

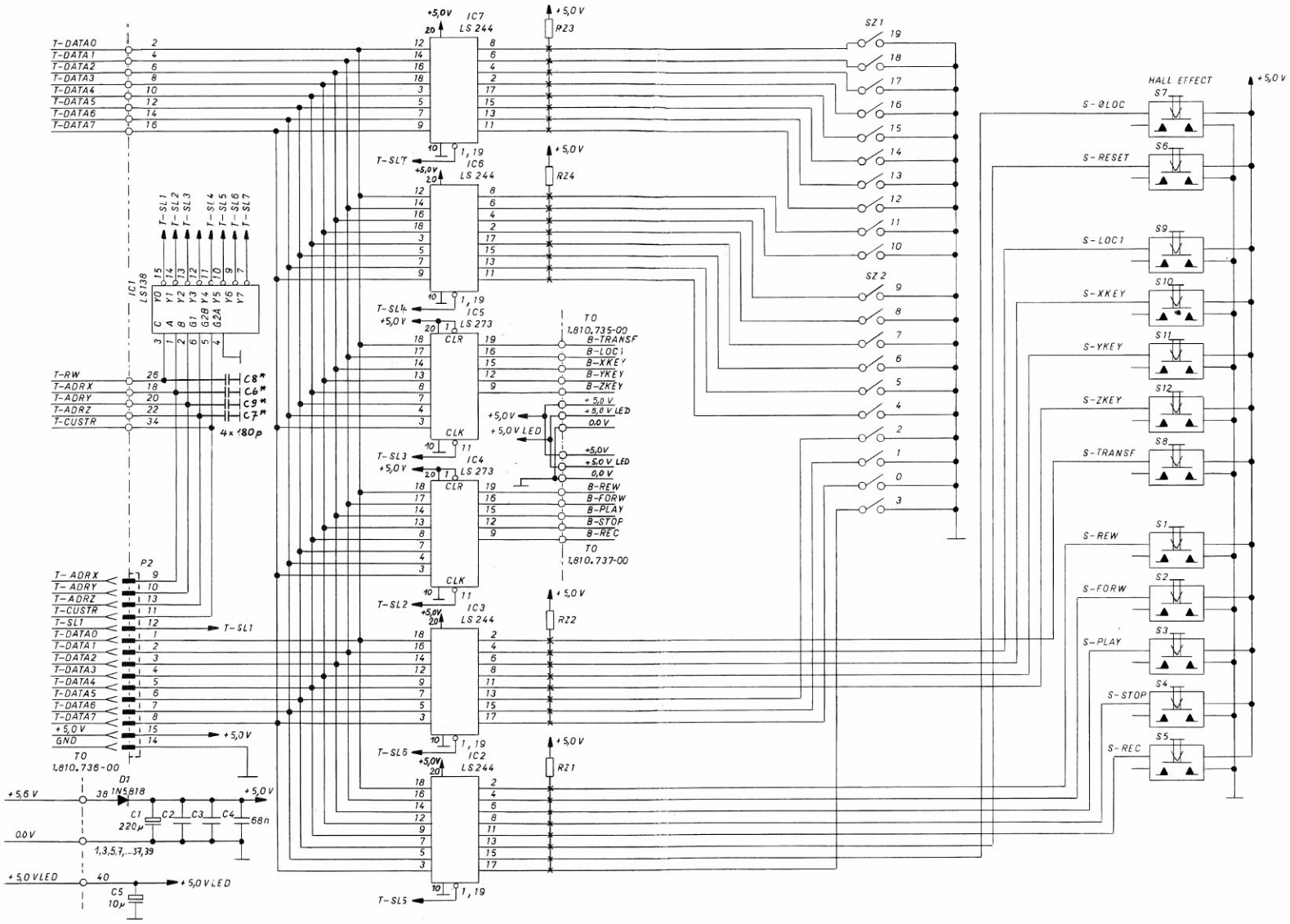

TO BE USED ONLY TOGETHER WITH MPU A810 PCB 1.810.752–00

✱ HAS BEEN MODIFIED

LED DRIVER PCB (BASIC FUNCTIONS) 1.810.737–00
LED DRIVER PCB (EXTENDED FUNCTIONS) 1.810.735–00

SEE SECTION 5/61

COMMAND UNIT PCB 1.810.734–00 GR21 (LCD) "ESE"

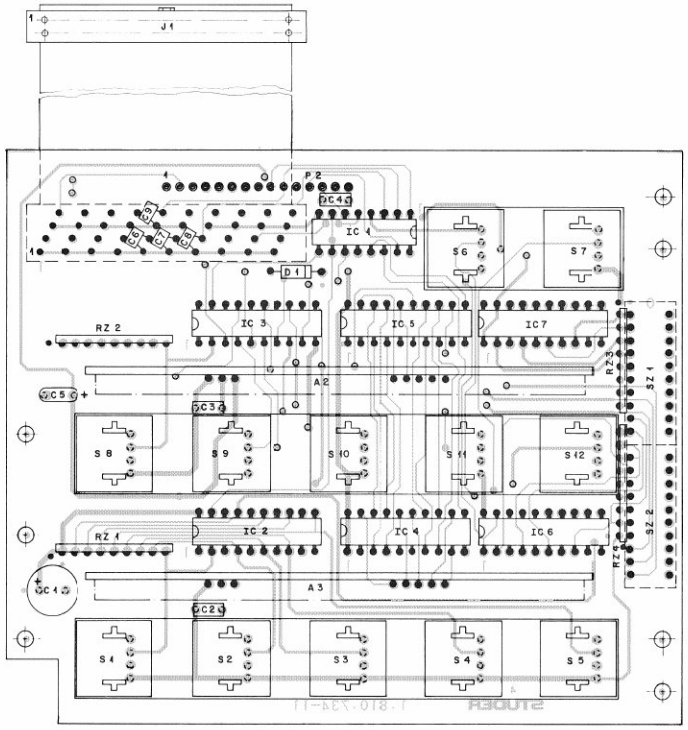

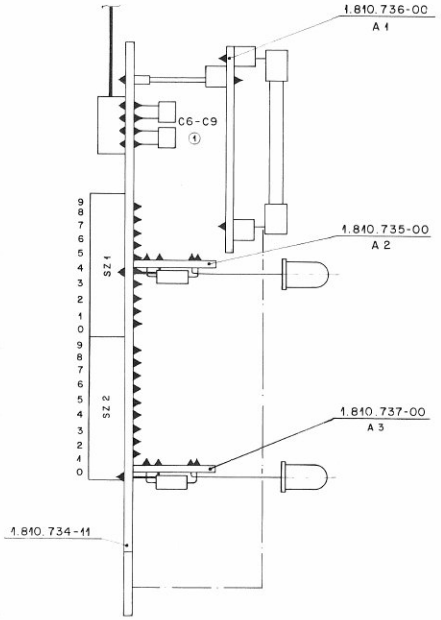

IND.	POS.NO.	PART NO.	VALUE	SPECIFICATIONS / EQUIVALENT	MANUF.
	A..0001	1.810.736.00		DISPLAY UNIT A810	
	A..0002	1.810.735.00		LED DRIVER (ext. fct.) A810	
	A..0003	1.810.737.00		LED DRIVER (basic fct.) A810	
	C..0001	59.22.2221	220 uF	-10%, 6.3V, El	
	C..0002	59.99.0205	68 nF	Ce	
	C..0003	59.99.0205	68 nF	Ce	
	C..0004	59.99.0205	68 nF	Ce	
	C..0005	59.26.2100	10 uF	-20%, 16V, Sal	Ph
(01)	C..0006	59.99.0192	180 pF	10%, Ce	
(01)	C..0007	59.99.0192	180 pF	10%, Ce	
(01)	C..0008	59.99.0192	180 pF	10%, Ce	
(01)	C..0009	59.99.0192	180 pF	10%, Ce	
	D..0001	50.04.0512	1N5818	1N5819	Mot
	IC.0001	50.06.0138	SN74LS138N		AMI,TI
	IC.0002	50.06.0244	74LS244	SN74LS244N	AMI,MM,Mot,TI
	IC.0003	50.06.0244	74LS244	SN74LS244N	AMI,MM,Mot,TI
	IC.0004	50.06.0273	N74LS273N	SN74LS273N	Sig,TI
	IC.0005	50.06.0273	N74LS273N	SN74LS273N	Sig,TI
	IC.0006	50.06.0244	74LS244	SN74LS244N	AMI,MM,Mot,TI
	IC.0007	50.06.0244	74LS244	SN74LS244N	AMI,MM,Mot,TI
	J..0001	54.14.5023	40 cont.	See note 1	
	P..0002			15 pieces Studer Nr. 1.010.019.14	
	RZ.0001	1.010.014.57		Network 8 * 10 kOhm, 10%	
	RZ.0002	1.010.014.57		Network 8 * 10 kOhm, 10%	
	RZ.0003	1.010.014.57		Network 8 * 10 kOhm, 10%	
	RZ.0004	1.010.014.57		Network 8 * 10 kOhm, 10%	
	S..0001	55.03.0260	Switch	Sigma Nr. MCFH 2 T	
	S..0002	55.03.0260	Switch	Sigma Nr. MCFH 2 T	
	S..0003	55.03.0260	Switch	Sigma Nr. MCFH 2 T	
	S..0004	55.03.0260	Switch	Sigma Nr. MCFH 2 T	

S T U D E R 83/03/02 PB COMMAND UNIT A810 1.810.734.00 PAGE 1

IND.	POS.NO.	PART NO.	VALUE	SPECIFICATIONS / EQUIVALENT	MANUF.
	S..0005	55.03.0260	Switch	Sigma Nr. MCFH 2 T	
	S..0006	55.03.0260	Switch	Sigma Nr. MCFH 2 T	
	S..0007	55.03.0260	Switch	Sigma Nr. MCFH 2 T	
	S..0008	55.03.0260	Switch	Sigma Nr. MCFH 2 T	
	S..0009	55.03.0260	Switch	Sigma Nr. MCFH 2 T	
	S..0010	55.03.0260	Switch	Sigma Nr. MCFH 2 T	
	S..0011	55.03.0260	Switch	Sigma Nr. MCFH 2 T	
	S..0012	55.03.0260	Switch	Sigma Nr. MCFH 2 T	
	SZ.0001	55.01.0170	Switch	Dual in line, SAE Nr. 1010-692	
	SZ.0002	55.01.0170	Switch	Dual in line, SAE Nr. 1010-692	

(01) 83/03/02 improved suppression of interferency on address lines.

Note 1 - Yamaichi Nr. FAS-40-17, Burndy Nr. FRS-40 ED-7P
Connection cable Studer Nr. 1.810.747.00

Ce=Ceramic, El=Electrolytic, Sal=Solid aluminium,

MANUFACTURER: AMI=American Microsystem Inc.,
MM=Monolitic Memories Inc., Mot=Motorola, Ph=Philips,
Sig=Signetics

ORIG 81/10/19 (01) 83/03/02

S T U D E R 83/03/02 PB COMMAND UNIT A810 1.810.734.00 PAGE 2

DISPLAY PCB 1.810.736–00 GR21 EL2 (LCD) "ESE"

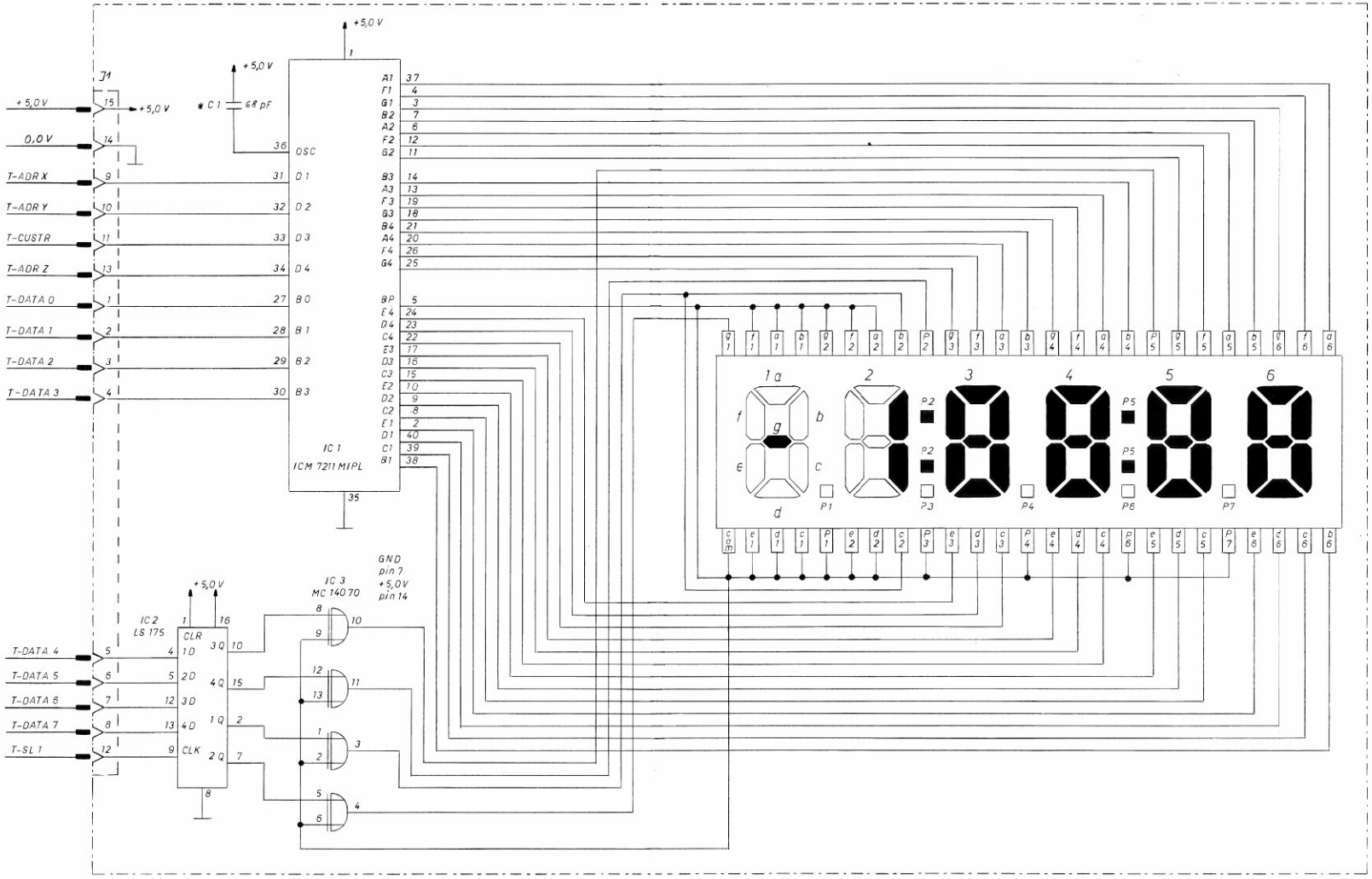

PLUGGED ONTO COMMAND UNIT PCB 1.810.734–00
OR COMMAND UNIT PCB 1.810.767–00

★ HAS BEEN MODIFIED

DISPLAY PCB 1.810.736–00 GR21 EL2 (LCD) "ESE"

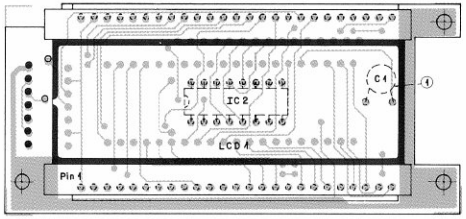

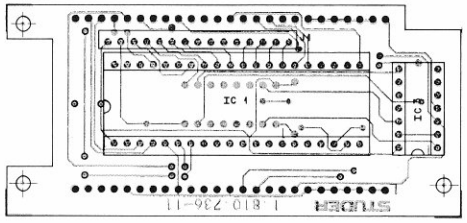

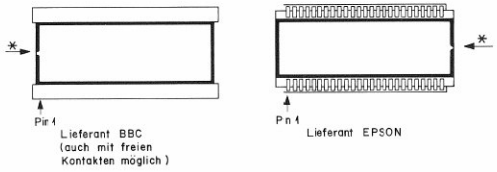

* Kerbe beachten

IND.	POS.NO.	PART NO.	VALUE	SPECIFICATIONS / EQUIVALENT	MANUF.
(00)	C..0001	59.32.0100	10 pF	20%, Ce	
(01)	C..0001	59.99.0217	68 pF	20%, Ce	
	IC.0001	53.07.0005	CD2210SE	ICM7211MIPL	Is.RCA
	IC.0002	53.06.0175	N74LS175N	SN74LS175N	Sig.TI
	IC.0003	53.07.0070	MC14070BCP	4070BPC	Fc.Mot
	J..0001			See note 2	
	LCD0001	73.01.0123		See note 1	

(01) 83/01/20 improved LCD display contrast by reducing the ac voltage frequency (C 1 68 pF instead of 10 pF)

Note 1 - Liquid Crystal Display
Videtec (BBC) Nr. LC 703060-301 15/12
Toshiba Nr. F 2019A-32 P1
Epson Nr. LD-H T918 AZ
Note 2 - 2 pieces Studer Nr. 53.03.0212, or
2 pieces Precimation Nr. P-115 B 02

Ce=Ceramic

MANUFACTURER: Fc=Fairchild, Is=Intersil, Mot=Motorola
RCA=Radio Corporation of America, Sig=Signetics,
TI=Texas Instruments.

DRIG 81/10/19 (01) 83/01/20

S T U D E R 83/01/20 PHM DISPLAY UNIT A810 1.810.736.00 PAGE 1

PLUGGED ONTO COMMAND UNIT PCB 1.810.734–00
OR COMMAND UNIT PCB 1.810.767–00

COMMAND UNIT PCB 1.810.767–00 GR21 (LED/LCD) "ESE"

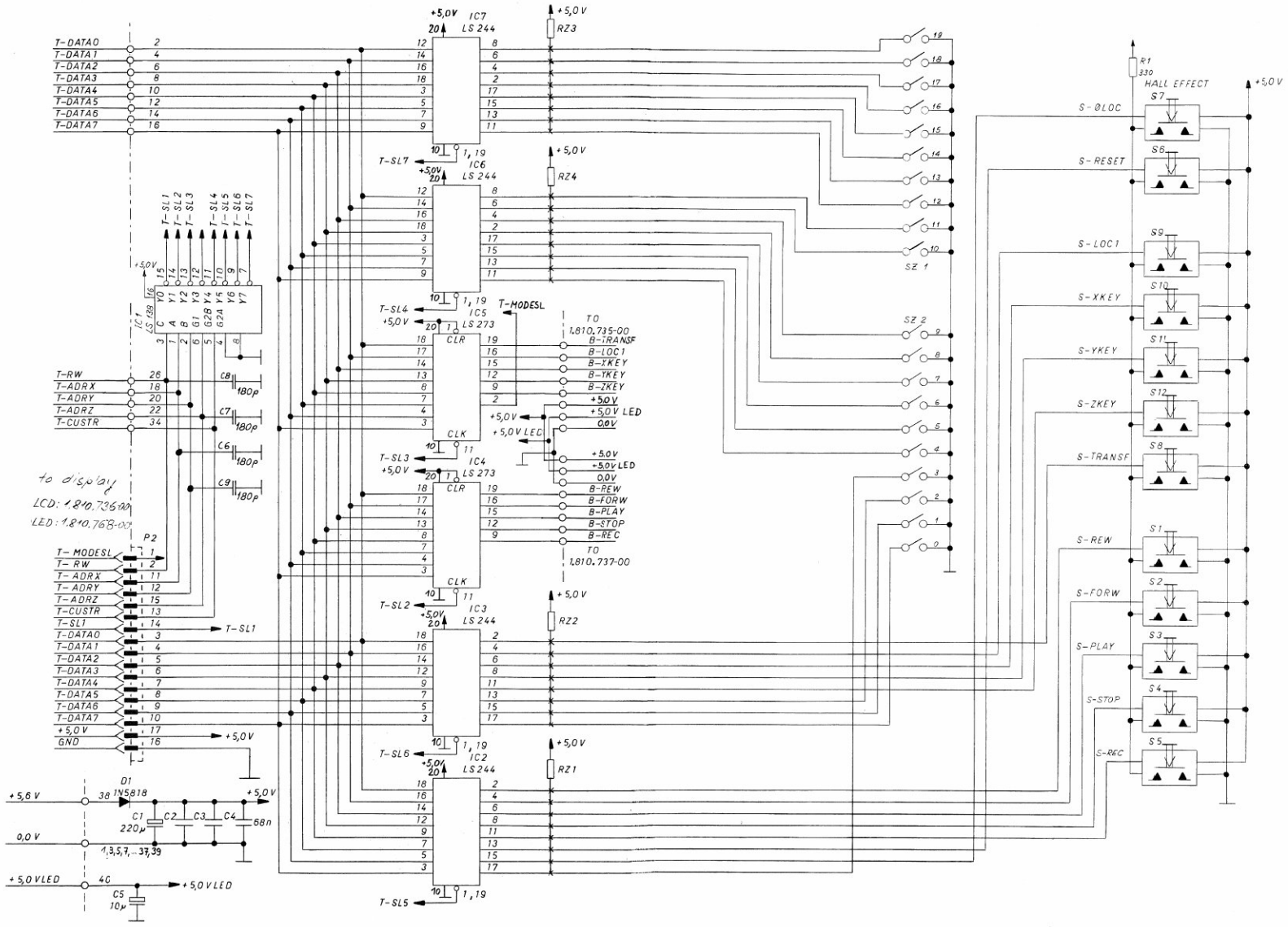

TO BE USED ONLY TOGETHER WITH MP UNIT A810 PCB 1.820.780–00

COMMAND UNIT PCB 1.810.767–00 GR21 (LED/LCD) "ESE"

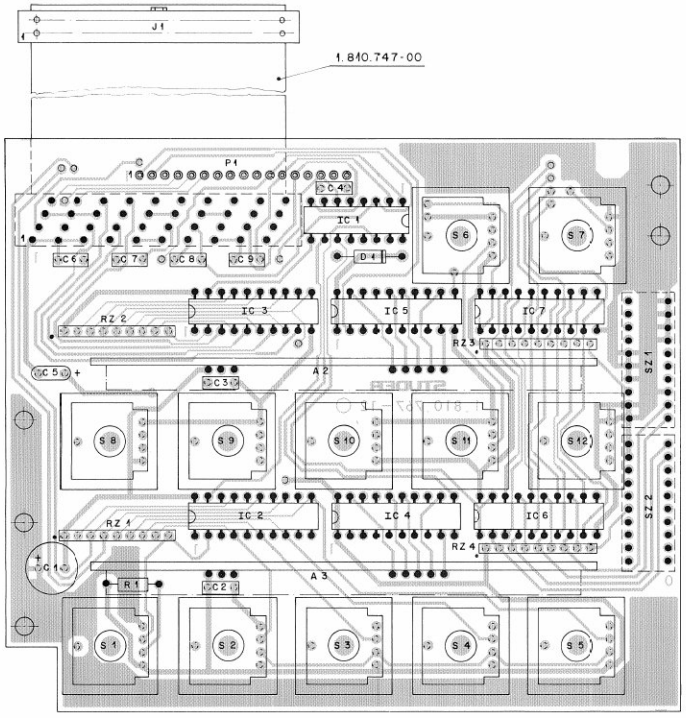

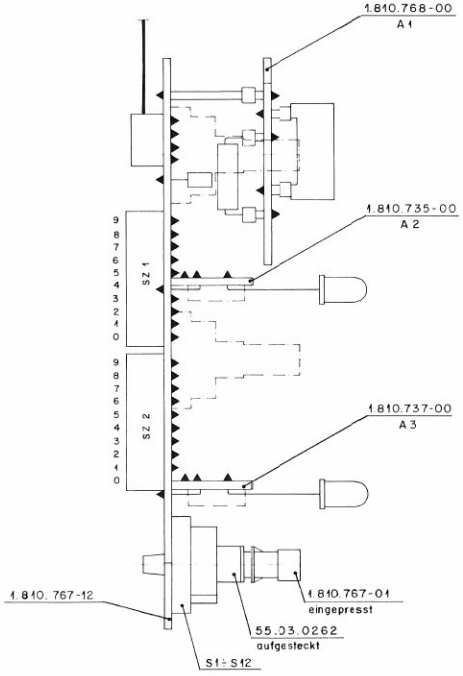

IND.	POS.NO.	PART NO.	VALUE	SPECIFICATIONS / EQUIVALENT	MANUF.
	A..0001	1.810.768.00		LED-DISPLAY UNIT A810	St
	A..0002	1.810.735.00		LED DRIVER (ext. fct.) A810	St
	A..0003	1.810.737.00		LED DRIVER (basic fct.) A810	St
	C..0001	59.22.2221	220 uF	-10%, 6.3V, El	
	C..0002	59.99.0205	64 nF	Co	
	C..0003	59.99.0205	64 nF	Co	
	C..0004	59.99.0205	64 nF	Co	
	C..0005	59.26.2100	10 uF	-20%, 16V, Sal	Ph
	C..0006	59.34.2181	180 pF	10%, Co	
	C..0007	59.34.2181	180 pF	10%, Co	
	C..0008	59.34.2181	180 pF	10%, Co	
	C..0009	59.34.2181	180 pF	10%, Co	
	D..0001	50.04.0512	1N5818	1N5819	Mot
	IC.0001	50.06.0138	SN74LS138N	DM74LS138N	NS+TI
	IC.0002	50.06.0244	74LS244	SN74LS244N	MMI+Mot+TI
	IC.0003	50.06.0244	74LS244	SN74LS244N	MMI+Mot+TI
	IC.0004	50.06.0273	N74LS273N	SN74LS273N, AM74LS273N	AMD+Sig+TI
	IC.0005	50.06.0273	N74LS273N	SN74LS273N, AM74LS273N	AMD Sig+TI
	IC.0006	50.06.0244	74LS244	SN74LS244N	MMI+Mot+TI
	IC.0007	50.06.0244	74LS244	SN74LS244N	MMI+Mot+TI
	J..0001	54.14.5023	40 cont.	See note 1	
	P..0002			17 pieces Studer Nr. 1.010.019.54	
	R..0001	57.11.4331	330 Ohm	5%	
	RZ.0001	1.010.014.57		Network 8 * 10 kOhm, 10%	
	RZ.0002	1.010.014.57		Network 8 * 10 kOhm, 10%	
	RZ.0003	1.010.014.57		Network 8 * 10 kOhm, 10%	
	RZ.0004	1.010.014.57		Network 8 * 10 kOhm, 10%	
	S..0001	55.03.0261		Momentary switch, Rafi Nr. 3.13C01.110	
	S..0002	55.03.0261		Momentary switch, Rafi Nr. 3.13C01.110	

S T U D E R 83/04/22 P9 COMMAND UNIT A810 1.810.767.00 PAGE 1

IND.	POS.NO.	PART NO.	VALUE	SPECIFICATIONS / EQUIVALENT	MANUF.
	S..0003	55.03.0261		Momentary switch, Rafi Nr. 3.13001.110	
	S..0004	55.03.0261		Momentary switch, Rafi Nr. 3.13001.110	
	S..0005	55.03.0261		Momentary switch, Rafi Nr. 3.13001.110	
	S..0006	55.03.0261		Momentary switch, Rafi Nr. 3.13001.110	
	S..0007	55.03.0261		Momentary switch, Rafi Nr. 3.13001.110	
	S..0008	55.03.0261		Momentary switch, Rafi Nr. 3.13001.110	
	S..0009	55.03.0261		Momentary switch, Rafi Nr. 3.13001.110	
	S..0010	55.03.0261		Momentary switch, Rafi Nr. 3.13001.110	
	S..0011	55.03.0261		Momentary switch, Rafi Nr. 3.13001.110	
	S..0012	55.03.0261		Momentary switch, Rafi Nr. 3.13001.110	
	SZ.0001	55.01.0170	Switch	Dual in line, AMP Nr. 435 166-7	
	SZ.0002	55.01.0170	Switch	Dual in line, AMP Nr. 435 166-7	

Note 1 - Yamaichi Nr. FAS-40-1P, Burndy Nr. FRS-40 B3-7P
Connection cable Studer Nr. 1.810.767.00

Ce=Ceramic, El=Electrolytic, Sal=Solid aluminium.

MANUFACTURER: AMD=Advanced Micro Devices, MMI=Monolitic Memories Inc.,
Mot=Motorola, NS=National Semiconductors, Ph=Philips,
Sig=Signetics, St=Studer.

ORIG 83/04/22

S T U D E R 83/04/22 P1 COMMAND UNIT A810 1.810.767.00 PAGE 2

TO BE USED ONLY TOGETHER WITH MP UNIT A810 PCB 1.820.780–00

DISPLAY PCB 1.810.768–00 (LED) GR21 EL2 "ESE"

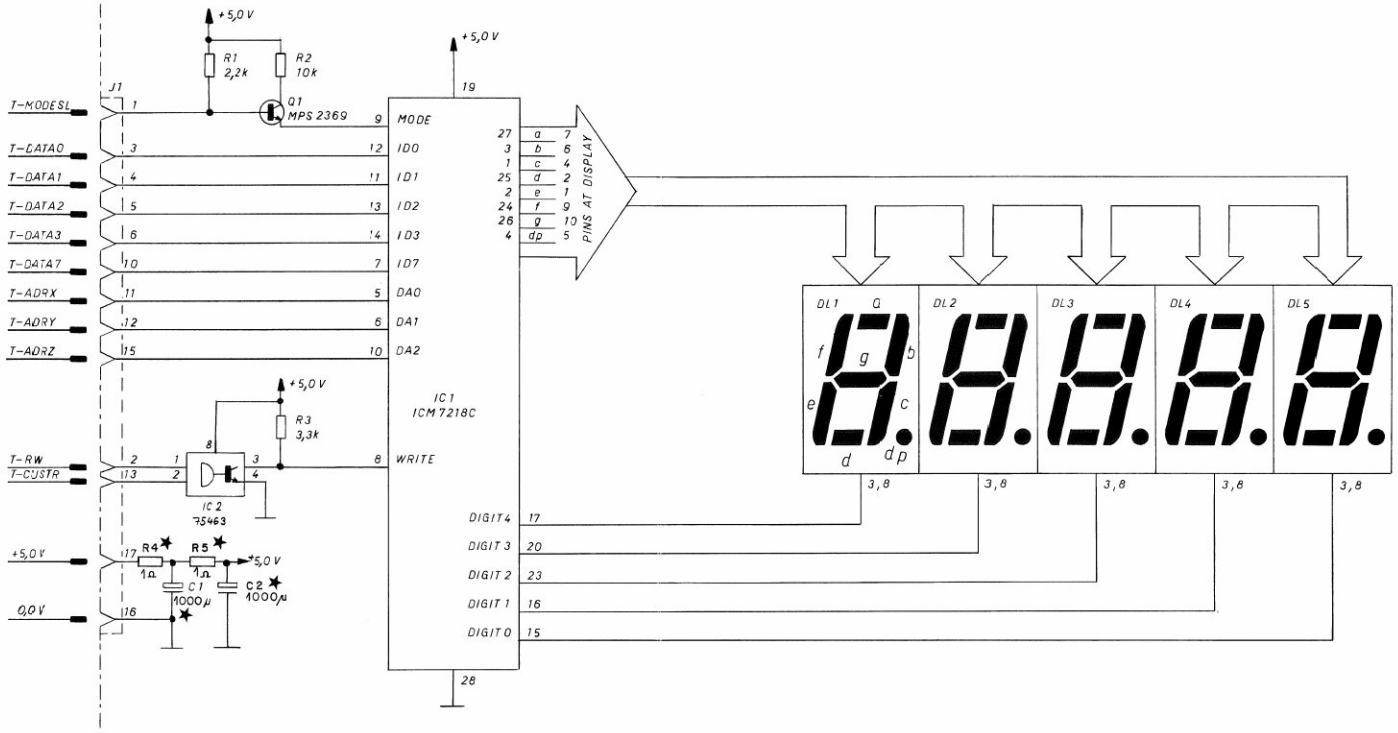

★HAS BEEN MODIFIED

TO BE USED ONLY TOGETHER WITH AND
PLUGGED ONTO COMMAND UNIT PCB 1.810.767–00 (LED)

DISPLAY PCB 1.810.768–00 (LED) GR21 EL2 "ESE"

COMPONENT SIDE LAYOUT 1.810.768–11

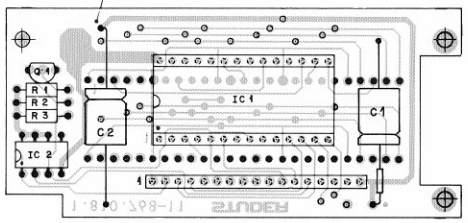

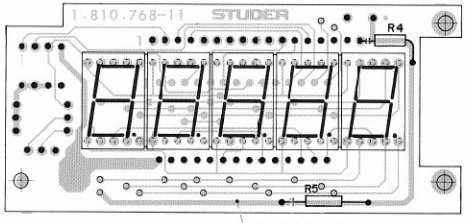

SOLDER SIDE

COMPONENT SIDE LAYOUT 1.810.768–12

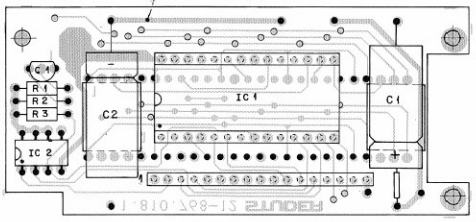

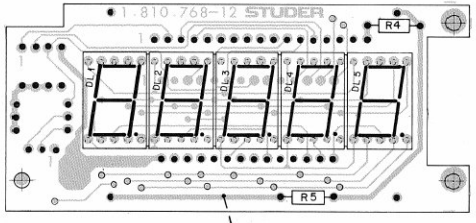

SOLDER SIDE

IND.	POS.NO.	PART NO.	VALUE	SPECIFICATIONS / EQUIVALENT			MANUF.
(30)	C.....1	59.26.0080	68 uF	+-20%	4.3V	Sal	
(31)	C.....1	59.25.1102	1000 uF	+-20%	4.3V	El	
(31)	C.....2	59.25.1102	1000 uF	+-20%	4.3V	El	
	DL....1	73.01.0124	MAN6660	LED orange			Ms
	DL....2	73.01.0124	MAN6660	LED orange			Ms
	DL....3	73.01.0124	MAN6660	LED orange			Ms
	DL....4	73.01.0124	MAN6660	LED orange			Ms
	DL....5	73.01.0124	MAN6660	LED orange			Ms
	IC....1	50.07.0001		ICM7218CIJI			Is
	IC....2	50.05.0203	SN75463	Driver			TI
	J.....1	53.03.0216		Connector 17 pins			
	Q.....1	50.03.0508	MPS2369	BSX 20			Mot.Ph
	R.....1	57.11.4222	2.2 kOhm	2%	0.250W	MF	
	R.....2	57.11.4103	10 kOhm				
	R.....3	57.11.4332	3.3 kOhm				
(31)	R.....4	57.11.4109	1 Ohm				
(31)	R.....5	57.11.4109	1 Ohm				

(01) 83.11.11 Improved multiplex noise suppression.

El=Electrolytic, MF=Metall Film

Manufacturer: Is=Intersil, TI=Texas Instruments, Mot=Motorola,
Ms=Monsanto, Ph=Philips

DATG 82/11/02 (01) 83/11/11

S T U D E R (01) 83/11/11 PB LED-Display Board 1.810.768-00 PAGE 1

LED DRIVER PCB BASIC FUNCTIONS 1.810.737–00
LED DRIVER PCB EXTENDED FUNCTIONS 1.810.735–00

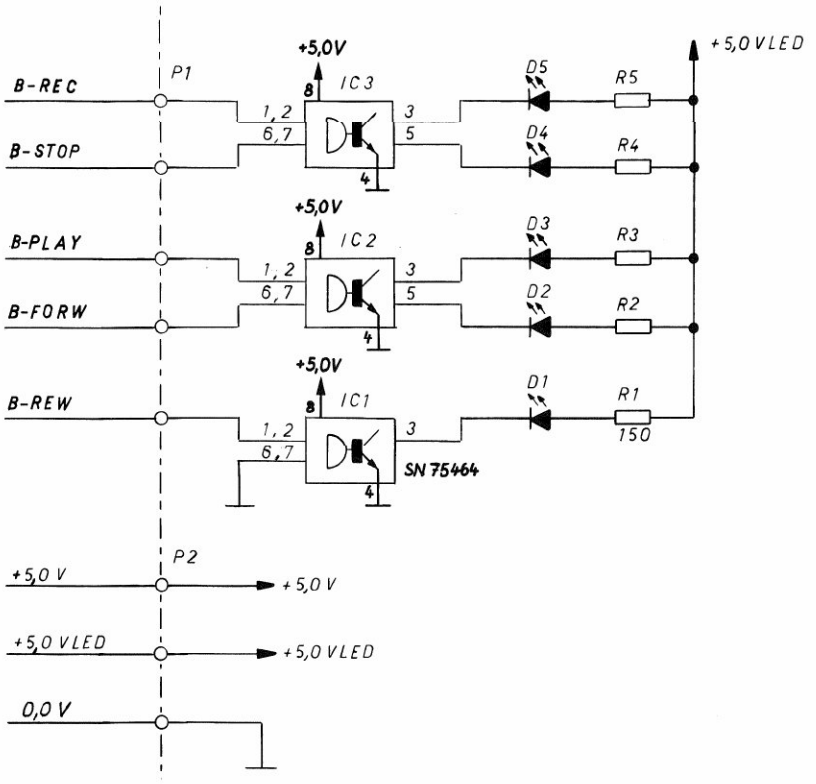

SOLDERED ONTO COMMAND UNIT PCB(LCD:1.810.734–00 OR LED:1.810.767–00)

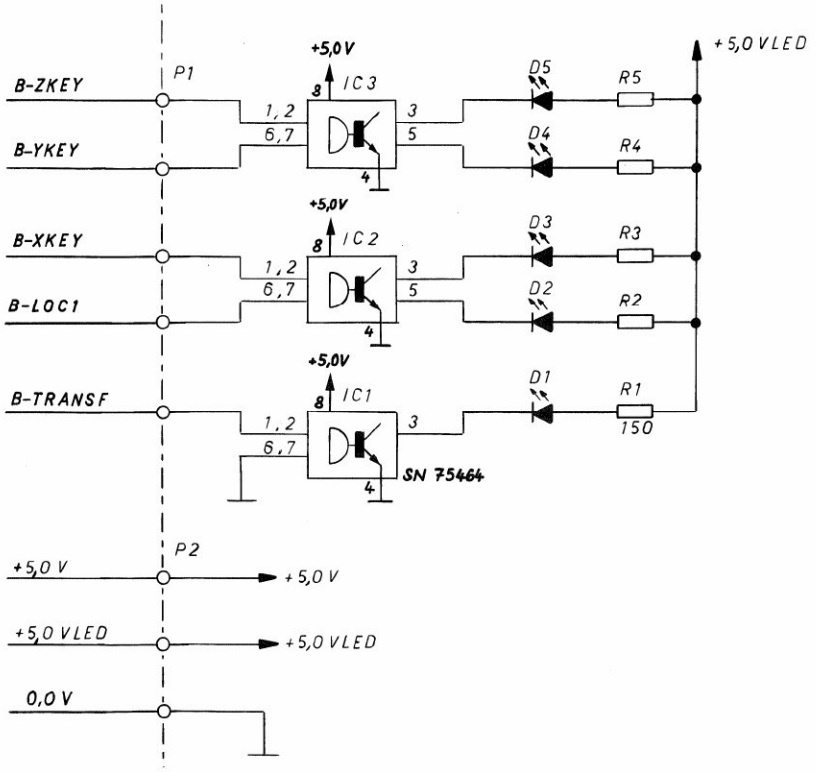

SOLDERED ONTO COMMAND UNIT PCB(LCD:1.810.734–00 OR LED:1.810.767–00)

LED DRIVER PCB BASIC FUNCTIONS 1.810.737–00
LED DRIVER PCB EXTENDED FUNCTIONS 1.810.735–00

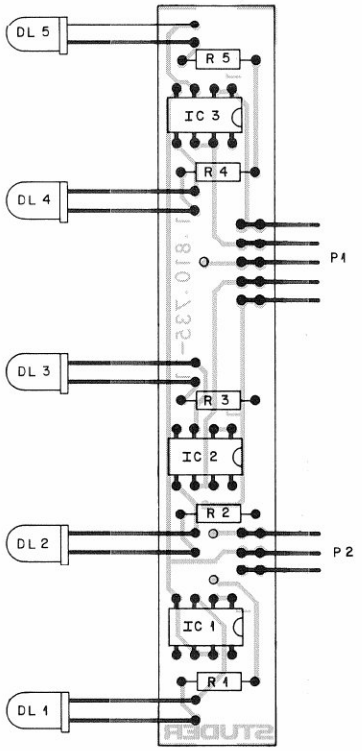

IND.	POS.NO.	PART NO.	VALUE	SPECIFICATIONS / EQUIVALENT	MANUF.
	DL.0001	50.04.2112	MV5353	CM 4-584 B, 5082-4555 (yellow)	CM,HP,Ms
	DL.0002	50.04.2112	MV5353	CM 4-584 B, 5082-4555 (yellow)	CM,HP,Ms
	DL.0003	50.04.2112	MV5353	CM 4-584 B, 5082-4555 (yellow)	CM,HP,Ms
	DL.0004	50.04.2112	MV5353	CM 4-584 B, 5082-4555 (yellow)	CM,HP,Ms
	DL.0005	50.04.2111	MV5753	CM 4-284 B, 5082-4655 (red)	CM,HP,Ms
	IC.0001	50.05.0204	SN75464P	SN75464N	TI,NS
	IC.0002	50.05.0204	SN75464P	SN75464N	TI,NS
	IC.0003	50.05.0204	SN75464P	SN75464N	TI,NS
	P..0001	54.01.0269	5 cont.	AMP Nr. 163.740-3	
	P..0002	54.01.0227	3 cont.	AMP Nr. 163.740-1	
	R..0001	57.11.4151	150 Ohm	2%	
	R..0002	57.11.4151	150 Ohm	2%	
	R..0003	57.11.4151	150 Ohm	2%	
	R..0004	57.11.4151	150 Ohm	2%	
	R..0005	57.11.4151	150 Ohm	2%	

MANUFACTURER: CM=Chicago Miniatur, HP=Hewlett Packard, Ms=Monsanto,
NS=National Semiconductors, TI=Texas Instruments

ORIG 81/09/15

S T U D E R 81/09/15 DSC LED DRIVER (basic fct.) A810 1.810.737.00 PAGE 1

IND.	POS.NO.	PART NO.	VALUE	SPECIFICATIONS / EQUIVALENT	MANUF.
	DL.0001	50.04.2112	MV5353	CM 4-584 B, 5082-4555 (yellow)	CM,HP,Ms
	DL.0002	50.04.2112	MV5353	CM 4-584 B, 5082-4555 (yellow)	CM,HP,Ms
	DL.0003	50.04.2112	MV5353	CM 4-584 B, 5082-4555 (yellow)	CM,HP,Ms
	DL.0004	50.04.2112	MV5353	CM 4-584 B, 5082-4555 (yellow)	CM,HP,Ms
	DL.0005	50.04.2112	MV5353	CM 4-584 B, 5082-4555 (yellow)	CM,HP,Ms
	IC.0001	50.05.0204	SN75464P	SN75464N	TI,NS
	IC.0002	50.05.0204	SN75464P	SN75464N	TI,NS
	IC.0003	50.05.0204	SN75464P	SN75464N	TI,NS
	P..0001	54.01.0269	5 cont.	AMP Nr. 163.740-3	
	P..0002	54.01.0227	3 cont.	AMP Nr. 163.740-1	
	R..0001	57.11.4151	150 Ohm	2%	
	R..0002	57.11.4151	150 Ohm	2%	
	R..0003	57.11.4151	150 Ohm	2%	
	R..0004	57.11.4151	150 Ohm	2%	
	R..0005	57.11.4151	150 Ohm	2%	

MANUFACTURER: CM=Chicago Miniatur, HP=Hewlett Packard, Ms=Monsanto,
NS=National Semiconductors, TI=Texas Instruments

ORIG 81/09/15

S T U D E R 81/09/15 DSC LED DRIVER (ext. fct.) A810 1.810.735.00 PAGE 1

SOLDERED ONTO COMMAND UNIT PCB(LCD:1.810.734–00 OR LED:1.810.767–00)

PARALLEL REMOTE CONTROLLER PCB 1.810.738–00 GR23 **ADDRESS PCB 1.810.739–00**

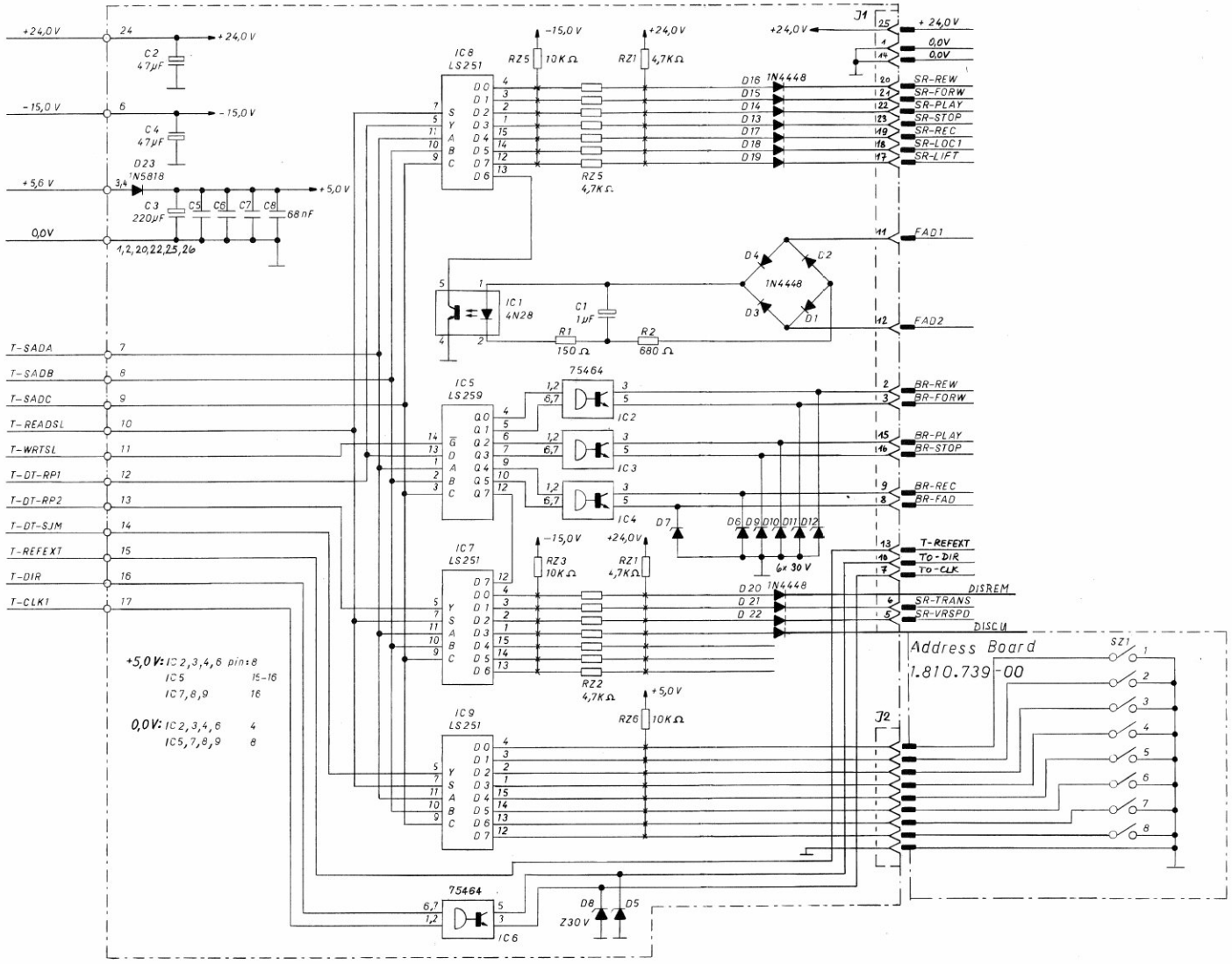

PARALLEL REMOTE CONTROLLER PCB 1.810.738–00 GR23

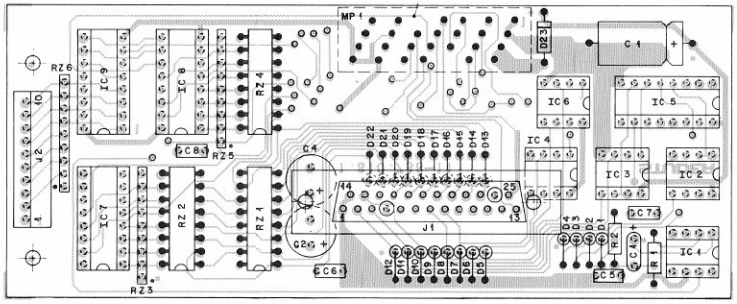

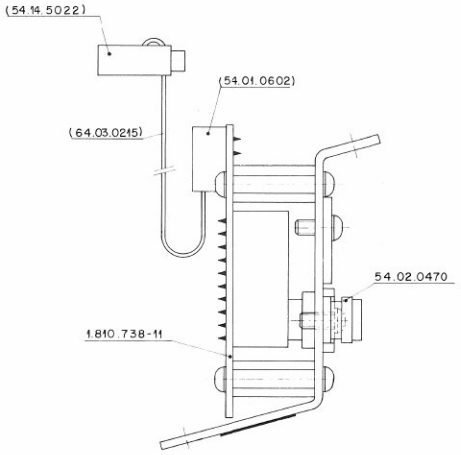

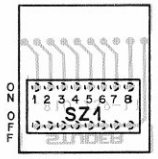

PLUGGED INTO PARALLEL REMOTE CONTROLLER PCB 1.810.738–00 (J2)

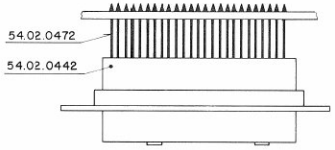

IND.	POS.NO.	PART NO.	VALUE	SPECIFICATIONS / EQUIVALENT	MANUF.
	C..0001	59.26.9109	1 uF	-20%, 40V, Sol	Ph
	C..0002	59.22.6470	47 uF	-10%, 40V, El	
	C..0003	59.25.1221	220 uF	-10%, 6V, El	
	C..0004	59.22.5470	47 uF	-10%, 25V, El	
	C..0005	59.99.0205	63 nF	Ce	
	C..0006	59.99.0205	63 nF	Ce	
	C..0007	59.99.0205	63 nF	Ce	
	C..0008	59.99.0205	63 nF	Ce	
	D..0001	50.04.0125	1N4448		ITT+Ph+Ses+TI
	D..0002	50.04.0125	1N4448		ITT+Ph+Ses+TI
	D..0003	50.04.0125	1N4448		ITT+Ph+Ses+TI
	D..0004	50.04.0125	1N4448		ITT+Ph+Ses+TI
	D..0005	50.04.1125	30 V Z	ZPD 30	ITT
	D..0006	50.04.1125	30 V Z	ZPD 30	ITT
	D..0007	50.04.1125	30 V Z	ZPD 30	ITT
	D..0008	50.04.1125	30 V Z	ZPD 30	ITT
	D..0009	50.04.1125	30 V Z	ZPD 30	ITT
	D..0010	50.04.1125	30 V Z	ZPD 30	ITT
	D..0011	50.04.1125	30 V Z	ZPD 30	ITT
	D..0012	50.04.1125	30 V Z	ZPD 30	ITT
	D..0013	50.04.0125	1N4448		ITT+Ph+Ses+TI
	D..0014	50.04.0125	1N4448		ITT+Ph+Ses+TI
	D..0015	50.04.0125	1N4448		ITT+Ph+Ses+TI
	D..0016	50.04.0125	1N4448		ITT+Ph+Ses+TI
	D..0017	50.04.0125	1N4448		ITT+Ph+Ses+TI
	D..0018	50.04.0125	1N4448		ITT+Ph+Ses+TI
	D..0019	50.04.0125	1N4448		ITT+Ph+Ses+TI
	D..0020	50.04.0125	1N4448		ITT+Ph+Ses+TI
	D..0021	50.04.0125	1N4448		ITT+Ph+Ses+TI
	D..0022	50.04.0125	1N4448		ITT+Ph+Ses+TI
	D..0023	50.04.0512	1N5818 1N5819		Mot
	IC.0001	50.99.0126	4N28	Opto-Coppler	Mot
	IC.0002	50.05.0204	SN75464P	DS36144	NS+TI
	IC.0003	50.05.0204	SN75464P	DS36144	NS+TI
	IC.0004	50.05.0204	SN75464P	DS36144	NS+TI

S T U D E R 82/04/01 DSC PARALLEL REMOTE CONTROL 1.810.738.00 PAGE 1

IND.	POS.NO.	PART NO.	VALUE	SPECIFICATIONS / EQUIVALENT	MANUF.
	IC.0005	50.06.0259	74LS259PC	SN74LS259N	Fc+Mot+TI
	IC.0006	50.05.0204	SN75464P	DS36144	NS+TI
	IC.0007	50.06.0251	SN74LS251N	AM74LS251N	AMI+TI
	IC.0008	50.06.0251	SN74LS251N	AM74LS251N	AMI+TI
	IC.0009	50.06.0251	SN74LS251N	AM74LS251N	AMI+TI
	J..0001	54.01.0442	25 cont.	AMP Nr. 164 533-1	
	J..0002	54.19.2027	10 cont.	Burndy Nr. GC50 10 50 V1 K9	
	J..0003	54.14.5022	26 cont.	See note 1	
	R..0001	57.11.4151	150 Ohm		
	R..0002	57.11.4681	680 Ohm		
	RZ.0001	57.85.3472	4.7 kOhm	See note 2	
	RZ.0002	57.88.3472	4.7 kOhm	See note 3	
	RZ.0003	1.010.014.57		Network 8 * 10 kOhm	
	RZ.0004	57.88.3472	4.7 kOhm	See note 3	
	RZ.0005	1.010.014.57		Network 8 * 10 kOhm	
	RZ.0006	1.010.014.57		Network 8 * 10 kOhm	

S T U D E R 82/04/01 DSC PARALLEL REMOTE CONTROL 1.810.738.00 PAGE 2

IND.	POS.NO.	PART NO.	VALUE	SPECIFICATIONS / EQUIVALENT	MANUF.

Note 1 - Yamaichi Nr. FAS-26-17, Burndy Nr. FRS-26 BD-IP
Connection cable Studer Nr. 1.810.746.00

Note 2 - Network 15 * 4.7 kOhm
Beckmann Nr. 898-1-R 4.7k
Epitek Nr. 1215-472-G
Allen Bradley Nr. 316A 472

Note 3 - Network 8 * 4.7 kOhm
Allen Bradley Nr. 316B 472
Beckmann Nr. 898-3-R 4.7k
Epitek Nr. 1208-4721

Ce=Ceramic, El=Electrolytic, Sol=Solid aluminium

MANUFACTURER: AMI=American Microsystem Inc., Fc=Fairchild,
ITT=Intermetall, Mot=Motorola,
NS=National Semiconductors, Ph=Philips, Ses=Sescosem,
TI=Texas Instruments

ORIG 82/04/01

S T U D E R 82/04/01 DSC PARALLEL REMOTE CONTROL 1.810.738.00 PAGE 3

IND.	POS.NO.	PART NO.	VALUE	SPECIFICATIONS / EQUIVALENT	MANUF.
	SZ....1	55.01.0168	Switch	See note 1	

Note 1 - Switch array
AMP Nr. 435166-5
SAE Nr. 1008-692

ORIG 81/10/14

S T U D E R 81/10/14 DSC ADDRESS BOARD A810 1.810.739.00 PAGE 1

ADDRESS PCB 1.810.739–00

SERIAL REMOTE CONTROLLER PCB 1.810.751–00 GR20 EL3, BUS DISPLAY PCB 1.810.757–00

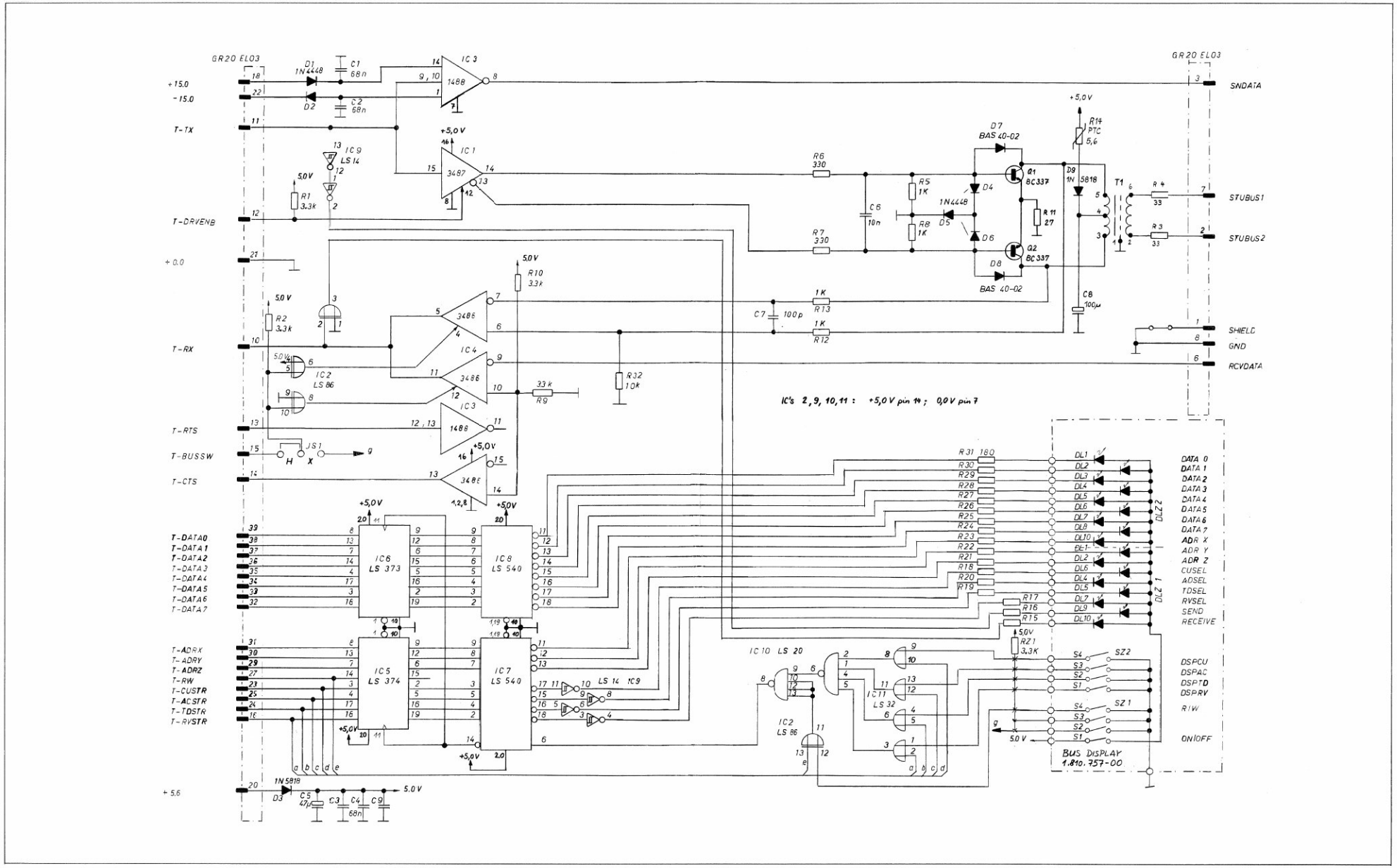

SERIAL REMOTE CONTROLLER PCB 1.810.751–00 GR20 EL3,

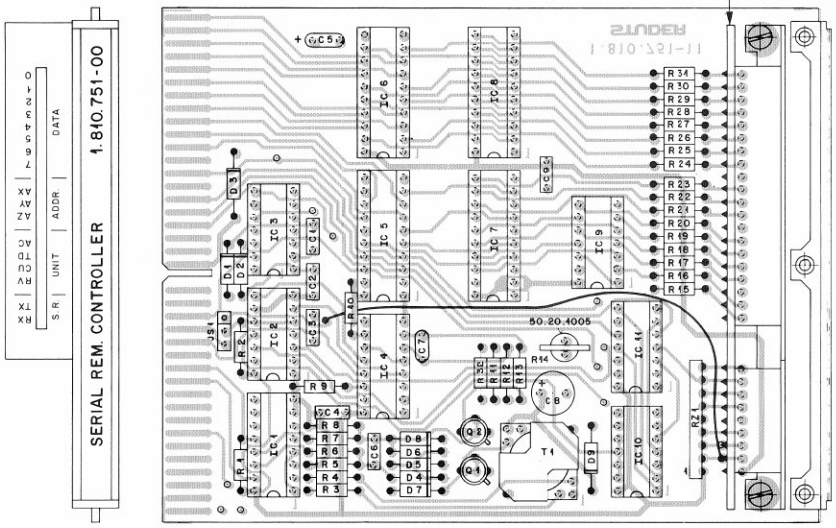

IND.	POS.NO.	PART NO.	VALUE	SPECIFICATIONS / EQUIVALENT	MANUF.
	A....1	1.810.757.00		Bus display board	
	C....1	59.99.0205	68 nF	-20%, Ce	
	C....2	59.99.0205	68 nF	-20%, Ce	
	C....3	59.99.0205	68 nF	-20%, Ce	
	C....4	59.99.0205	68 nF	-20%, Ce	
	C....5	59.26.0470	47 uF	20%, 6.3 V, Sal	
	C....6	59.06.0103	10 nF	10%, PETP	
	C....7	59.34.1101	100 pF	2%, Ce	
	C....8	59.22.3101	100 uF	10%, 10 V, El	
	C....9	59.99.0205	68 nF	-20%, Ce	
	D....1	50.04.0125	1N4448		ITT,Ph,Ses,TI
	D....2	50.04.0125	1N4448		ITT,Ph,Ses,TI
	D....3	50.04.0512	1N5818	1N5819	Mot
	D....4	50.04.0125	1N4448		ITT,Ph,Ses,TI
	D....5	50.04.0125	1N4448		ITT,Ph,Ses,TI
	D....6	50.04.0125	1N4448		ITT,Ph,Ses,TI
	D....7	50.04.0127	BAT85	BAS40-02	Ph,Sie
	D....8	50.04.0127	BAT85	BAS40-02	Ph,Sie
	D....9	50.04.0512	1N5818	1N5819	Mot
	IC....1	50.15.0105	MC3487	DS3487	Mot,SGS
	IC....2	50.06.0086	SN74LS 86N	DM74LS 86N, 74LS 86PC	Fc,NS,Sig,TI
	IC....3	50.15.0106	MC1488		Mot
	IC....4	50.15.0104	MC3486P	DS3486	Mot,NS
	IC....5	50.06.0374	AM74LS374N	SN74LS374N, DM74LS374N	AMD,NS TI
	IC....6	50.06.0373	SN74LS373N	N74LS373N	Mot,Sig,TI
	IC....7	50.06.0540	SN74LS540N	74LS540PC	Fc,Mot,TI
	IC....8	50.06.0540	SN74LS540N	74LS540PC	Fc,Mot,TI
	IC....9	50.06.0014	SN74LS 14N	DM74LS 14N, 74LS 14PC	Fc,NS,Sig,TI
	IC....10	50.06.0020	SN74LS 20N	DM74LS 20N, 74LS 20PC	Fc,NS,Sig,TI
	IC....11	50.06.0032	SN74LS 32N	DM74LS 32N, 74LS 32PC	Fc,NS,Sig,TI
	J5....1			See note 1	
	Q....1	50.03.0434	BFR18		SGS

S T U D E R 82/07/13 DSC SERIAL REMOTE CONTROLLER 1.810.751.00 PAGE 1

IND.	POS.NO.	PART NO.	VALUE	SPECIFICATIONS / EQUIVALENT	MANUF.
	Q....2	50.03.0434	BFR18		SGS
	R....1	57.11.4332	3.3 kOhm	2%	
	R....2	57.11.4332	3.3 kOhm	2%	
	R....3	57.11.4330	33 Ohm	2%	
	R....4	57.11.4330	33 Ohm	2%	
	R....5	57.11.4102	1 kOhm	2%	
	R....6	57.11.4331	330 Ohm	2%	
	R....7	57.11.4331	330 Ohm	2%	
	R....8	57.11.4102	1 kOhm	2%	
	R....9	57.11.4332	3.3 kOhm	2%	
	R....10	57.11.4332	3.3 kOhm	2%	
	R....11	57.11.4270	27 Ohm	2%	
	R....12	57.11.4102	1 kOhm	2%	
	R....13	57.11.4102	1 kOhm	2%	
	R....14	57.99.0209	5.6 Ohm	PTC Resistor, Philips Nr. 2322 662 91005	
	R....15	57.11.4180	180 Ohm	2%	
	R....16	57.11.4180	180 Ohm	2%	
	R....17	57.11.4180	180 Ohm	2%	
	R....18	57.11.4180	180 Ohm	2%	
	R....19	57.11.4180	180 Ohm	2%	
	R....20	57.11.4180	180 Ohm	2%	
	R....21	57.11.4180	180 Ohm	2%	
	R....22	57.11.4180	180 Ohm	2%	
	R....23	57.11.4180	180 Ohm	2%	
	R....24	57.11.4180	180 Ohm	2%	
	R....25	57.11.4180	180 Ohm	2%	
	R....26	57.11.4180	180 Ohm	2%	
	R....27	57.11.4180	180 Ohm	2%	
	R....28	57.11.4180	180 Ohm	2%	
	R....29	57.11.4180	180 Ohm	2%	
	R....30	57.11.4180	180 Ohm	2%	
	R....31	57.11.4180	180 Ohm	2%	
	R....32	57.11.4103	10 kOhm	2%	
	RZ....1	57.88.4332	3.3 kOhm	See note 2	

S T U D E R 82/07/13 DSC SERIAL REMOTE CONTROLLER 1.810.751.00 PAGE 2

IND.	POS.NO.	PART NO.	VALUE	SPECIFICATIONS / EQUIVALENT	MANUF.
	T....1	1.022.223.00		Studio Bus Transformer	St

Note 1 - Contact pin: Studer Nr. 54.11.0126
Berg Nr. 75214-318-36
Metroplast Nr. SL 1/25/36 Z
Connatel Nr. 386 0356 | 36 440
Bridge: Studer Nr. 54.01.0021
Metroplast Nr. CABL Z B
Connatel Nr. 2 030 946-8

Note 2 - Network: 8 * 3.3 kOhm, 5%
Sicovend Nr. C09 x 3.3 k J
Ineltro Nr. R88 3.3 k 5%

Ce=Ceramic, El=Electrolytic, Sal=Solid aluminium, PETP=Polyester

MANUFACTURER: AMD=Advanced Micro Devices, Fc=Fairchild,
ITT=Intermetall, Mot=Motorola,
NS=National Semiconductors, Ph=Philips, Ses=Sescosem,
SGS=SGS-Ates, Sie=Siemens, Sig=Signetics, St=Studer,
TI=Texas Instruments,

ORIG 82/07/13

S T U D E R 82/07/13 DSC SERIAL REMOTE CONTROLLER 1.810.751.00 PAGE 3

BUS DISPLAY PCB 1.810.757–00

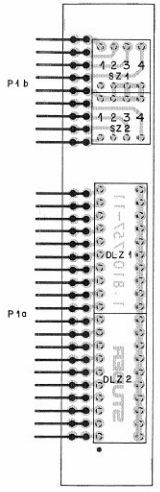

BUS DISPLAY PCB 1.810.757–00 SOLDERED ONTO SERIAL REMOTE CONTROLLER PCB 1.810.751–00

IND.	POS.NO.	PART NO.	VALUE	SPECIFICATIONS / EQUIVALENT	MANUF.
	DLZ....1	50.04.2134	MV57164F	MV57164G	GI
	DLZ....2	50.04.2134	MV57164F	MV57164G	GI
	SZ....1	55.01.0164		Switch Array, AMP 0-161 391-4, TAE 1004-692	
	SZ....2	55.01.0164		Switch Array, AMP 0-161 391-4, TAE 1004-692	
	P....1a	54.01.0261	20 cont.	AMP 1-163,740-9	
	P....1b	54.01.0220	9 cont.	AMP 163,740-7	

MANUFACTURER: GI=General Instruments

ORIG 82/06/23

S T U D E R 82/06/23 DSC BUS DISPLAY 1.810.757.00 PAGE 1

SERIAL REMOTE CONTROLLER 1.810.751-81/-82 GR20 EL3
- BUS DISPLAY PCB 1.810.757-00

MODIFICATION -00 -> -81:
- CUT CONDUCTOR FROM IC3 PIN9 TO PIN10.
- INSERT CONNECTION FROM IC2 PIN 9 TOR IC3 PIN9.

MODIFICATION -81 -> 82:
- ADDITIONAL: R33, 2.2 kΩ, 57.11.4222, FROM IC 4 PIN9 TO GND.

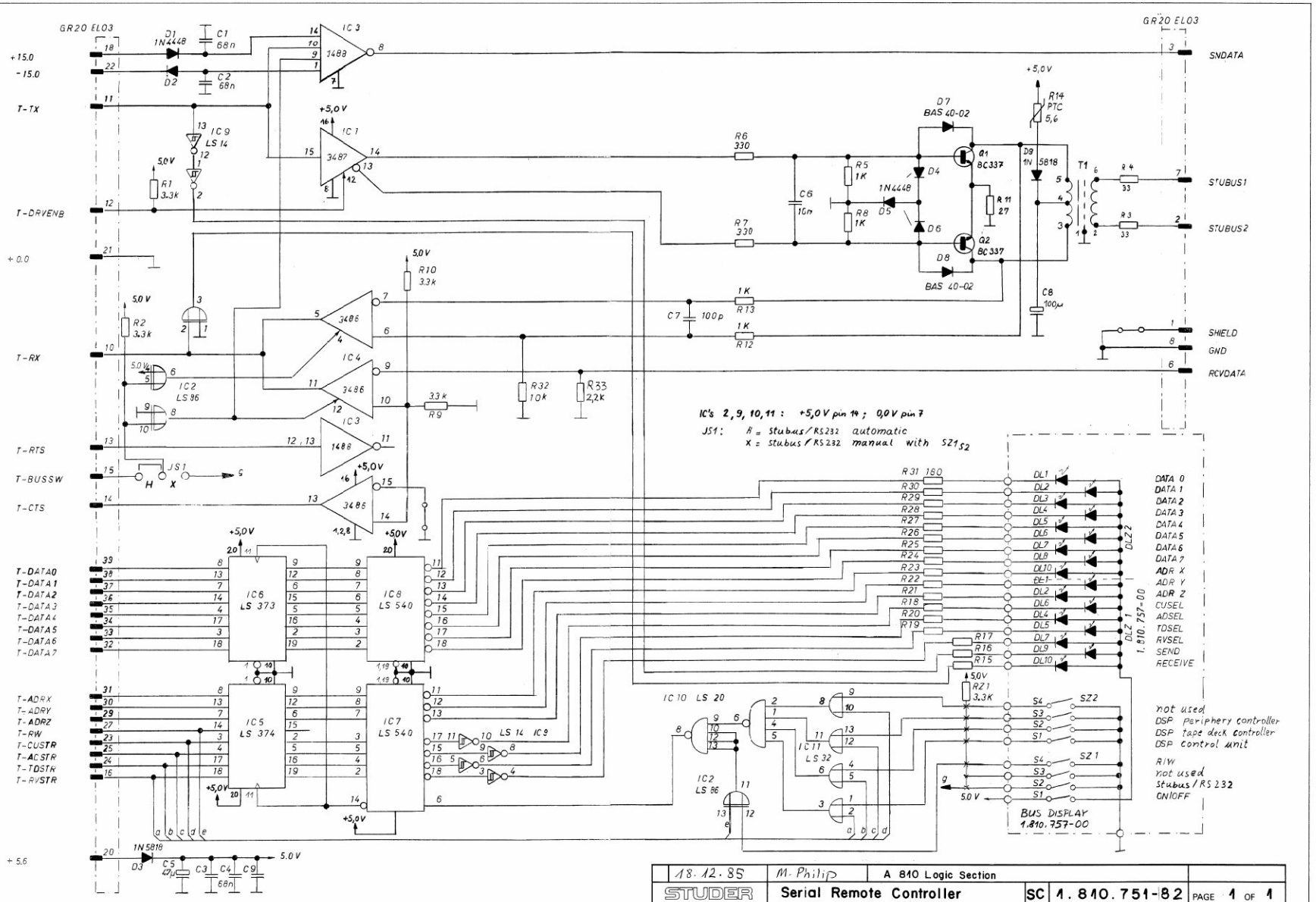

18.12.85	M. Philip	A 810 Logic Section		
STUDER	Serial Remote Controller	SC	1.810.751-82	PAGE 1 OF 1

SERIAL REMOTE CONTROLLER 1.810.751-81/-82 GR20 EL3
(BUS DISPLAY PCB 1.810.757-00: REFER TO SECTION 5/70)

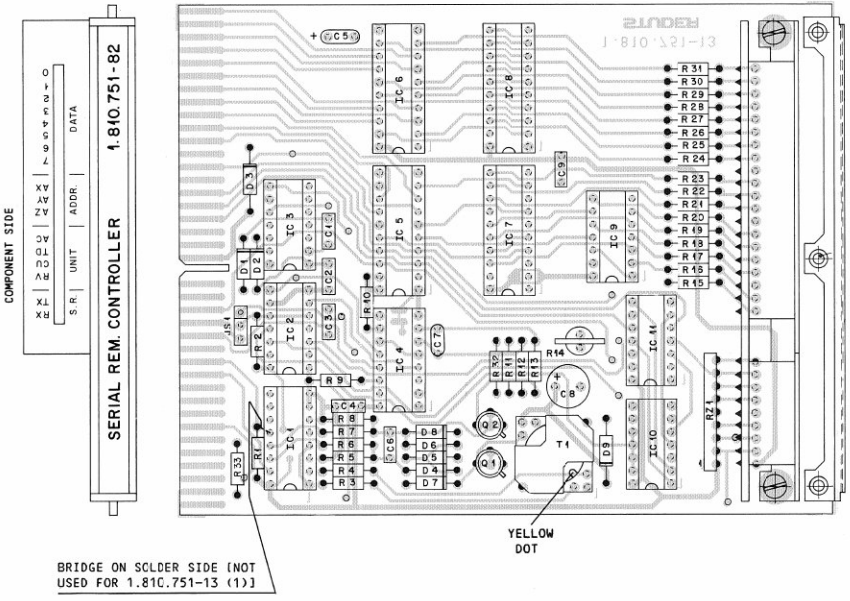

IND.	POS.NO.	PART NO.	VALUE	SPECIFICATIONS / EQUIVALENT	MANUF.
	A.....1	1.810.757.00		Bus display board	
	C.....1	59.99.0205	68 nF	-20%, Ce	
	C.....2	59.99.0205	68 nF	-20%, Ce	
	C.....3	59.99.0205	68 nF	-20%, Ce	
	C.....4	59.99.0205	68 nF	-20%, Ce	
	C.....5	59.26.0470	47 uF	20%, 6.3 V, Sal	
	C.....6	59.06.0103	10 nF	10%, PETP	
(00)	C.....7	59.34.1101	100 pF	2%, Ce	
(01)	C.....7	59.34.2101	100 pF	2%, Ce	
	C.....8	59.22.3101	100 uF	10%, 10 V, El	
	C.....9	59.99.0205	68 nF	-20%, Ce	
	D.....1	50.04.0125	1N4448		ITT,Ph,Sos,TI
	D.....2	50.04.0125	1N4448		ITT,Ph,Sos,TI
	D.....3	50.04.0512	1N5818	1N5819	Mot
	D.....4	50.04.0125	1N4448		ITT,Ph,Sos,TI
	D.....5	50.04.0125	1N4448		ITT,Ph,Sos,TI
	D.....6	50.04.0125	1N4448		ITT,Ph,Sos,TI
	D.....7	50.04.0127	BA185	BA540-02	Ph,Sie
	D.....8	50.04.0127	BA185	BA540-02	Ph,Sie
	D.....9	50.04.0512	1N5818	1N5819	Mot
	IC....1	50.15.0105	MC3487	DS3487	Mot,SGS
	IC....2	50.06.0086	SN74LS 86N	DM74LS 85N, 74LS 86PC	Fc,NS,Sig,TI
	IC....3	50.15.0106	MC1488		Mot
	IC....4	50.15.0104	MC3486P	DS3486	Mot,NS
	IC....5	50.06.0374	AM74LS374N	SN74LS374N, DM74LS374N	AMD,NS,TI
	IC....6	50.06.0373	SN74LS373N	N74LS373N	Mot,Sig,TI
	IC....7	50.06.0540	SN74LS540N	74LS540PC	Fc,Mot,TI
	IC....8	50.06.0540	SN74LS540N	74LS540PC	Fc,Mot,TI
	IC....9	50.06.0014	SN74LS 14N	DM74LS 14N, 74LS 14PC	Fc,NS,Sig,TI
	IC....10	50.06.0020	SN74LS 20N	DM74LS 20N, 74LS 20PC	Fc,NS,Sig,TI
	IC....11	50.06.0032	SN74LS 32N	DM74LS 32N, 74LS 32PC	Fc,NS,Sig,TI
	JS....1			See note 1	

IND.	POS.NO.	PART NO.	VALUE	SPECIFICATIONS / EQUIVALENT	MANUF.
	Q.....1	50.03.0434	BFR18		SGS
	Q.....2	50.03.0434	BFR18		SGS
	R.....1	57.11.4332	3.3 kOhm	2%	
	R.....2	57.11.4332	3.3 kOhm	2%	
	R.....3	57.11.4330	33 Ohm	2%	
	R.....4	57.11.4330	33 Ohm	2%	
	R.....5	57.11.4102	1 kOhm	2%	
	R.....6	57.11.4331	330 Ohm	2%	
	R.....7	57.11.4331	330 Ohm	2%	
	R.....8	57.11.4102	1 kOhm	2%	
	R.....9	57.11.4332	3.3 kOhm	2%	
	R.....10	57.11.4332	3.3 kOhm	2%	
	R.....11	57.11.4270	27 Ohm	2%	
	R.....12	57.11.4102	1 kOhm	2%	
	R.....13	57.11.4102	1 kOhm	2%	
	R.....14	57.99.0209	5.6 Ohm	PTC Resistor, Philips Nr. 2322 662 91005	
(00)	R.....15	57.11.4180	180 Ohm	2%	
(01)	R.....15	57.11.4181	180 Ohm	2%	
(00)	R.....16	57.11.4180	180 Ohm	2%	
(01)	R.....16	57.11.4181	180 Ohm	2%	
(00)	R.....17	57.11.4180	180 Ohm	2%	
(01)	R.....17	57.11.4181	180 Ohm	2%	
(00)	R.....18	57.11.4180	180 Ohm	2%	
(01)	R.....18	57.11.4181	180 Ohm	2%	
(00)	R.....19	57.11.4180	180 Ohm	2%	
(01)	R.....19	57.11.4181	180 Ohm	2%	
(00)	R.....20	57.11.4180	180 Ohm	2%	
(01)	R.....20	57.11.4181	180 Ohm	2%	
(00)	R.....21	57.11.4180	180 Ohm	2%	
(01)	R.....21	57.11.4181	180 Ohm	2%	
(00)	R.....22	57.11.4180	180 Ohm	2%	
(01)	R.....22	57.11.4181	180 Ohm	2%	
(00)	R.....23	57.11.4180	180 Ohm	2%	
(01)	R.....23	57.11.4181	180 Ohm	2%	
(00)	R.....24	57.11.4180	180 Ohm	2%	
(01)	R.....24	57.11.4181	180 Ohm	2%	

IND.	POS.NO.	PART NO.	VALUE	SPECIFICATIONS / EQUIVALENT	MANUF.
(00)	R.....25	57.11.4180	180 Ohm	2%	
(01)	R.....25	57.11.4181	180 Ohm	2%	
(00)	R.....26	57.11.4180	180 Ohm	2%	
(01)	R.....26	57.11.4181	180 Ohm	2%	
(00)	R.....27	57.11.4180	180 Ohm	2%	
(01)	R.....27	57.11.4181	180 Ohm	2%	
(00)	R.....28	57.11.4180	180 Ohm	2%	
(01)	R.....28	57.11.4181	180 Ohm	2%	
(00)	R.....29	57.11.4180	180 Ohm	2%	
(01)	R.....29	57.11.4181	180 Ohm	2%	
(00)	R.....30	57.11.4180	180 Ohm	2%	
(01)	R.....30	57.11.4181	180 Ohm	2%	
(00)	R.....31	57.11.4180	180 Ohm	2%	
(01)	R.....31	57.11.4181	180 Ohm	2%	
	R.....32	57.11.4103	10 kOhm	2%	
	R.....33	57.11.4222	2.2 kOhm	2%	
	RZ....1	57.88.4332	3.3 kOhm	See note 2	
	T.....1	1.022.223.00		Studio Bus Transformer	St

Note 1 - Contact pin:

	Studer	Nr. 54.11.0126	
	Berg	Nr. 75219-318-36	
	Metroplast	Nr. SL 1/25/36 J	
	Connatel	Nr. 386 0350 1 36 440	
Bridge:	Studer	Nr. 54.01.0021	
	Metroplast	Nr. CABI Z 8	
	Connatel	Nr. Z 030 946-8	

Note 2 - Network:

8 * 3.3 kOhm, 5%
Sicovend Nr. C09 x 3.3 k J
Ineltro Nr. R88 3.3 k 5%

Ce=Ceramic, El=Electrolytic, Sal=Solid aluminium, PETP=Polyester

MANUFACTURER: AMD=Advanced Micro Devices, Fc=Fairchild,
ITT=Intermetall, Mot=Motorola,
NS=National Semiconductors, Ph=Philips, Sos=Sescosem,
SGS=SGS-Ates, Sie=Siemens, Sig=Signetics, St=Studer,
TI=Texas Instruments.

ORIG 85/12/18 (01) 86/04/29

PUBLISHED: 12/86

PERIPHERY CONTROLLER UNIT 1.810.753–00 GR20 EL4 "ESE"
PERIPHERY CONTROLLER PCB 1.810.756–00, AUDIO ADJUSTMENT KEYBOARD PCB 1.810.755–00

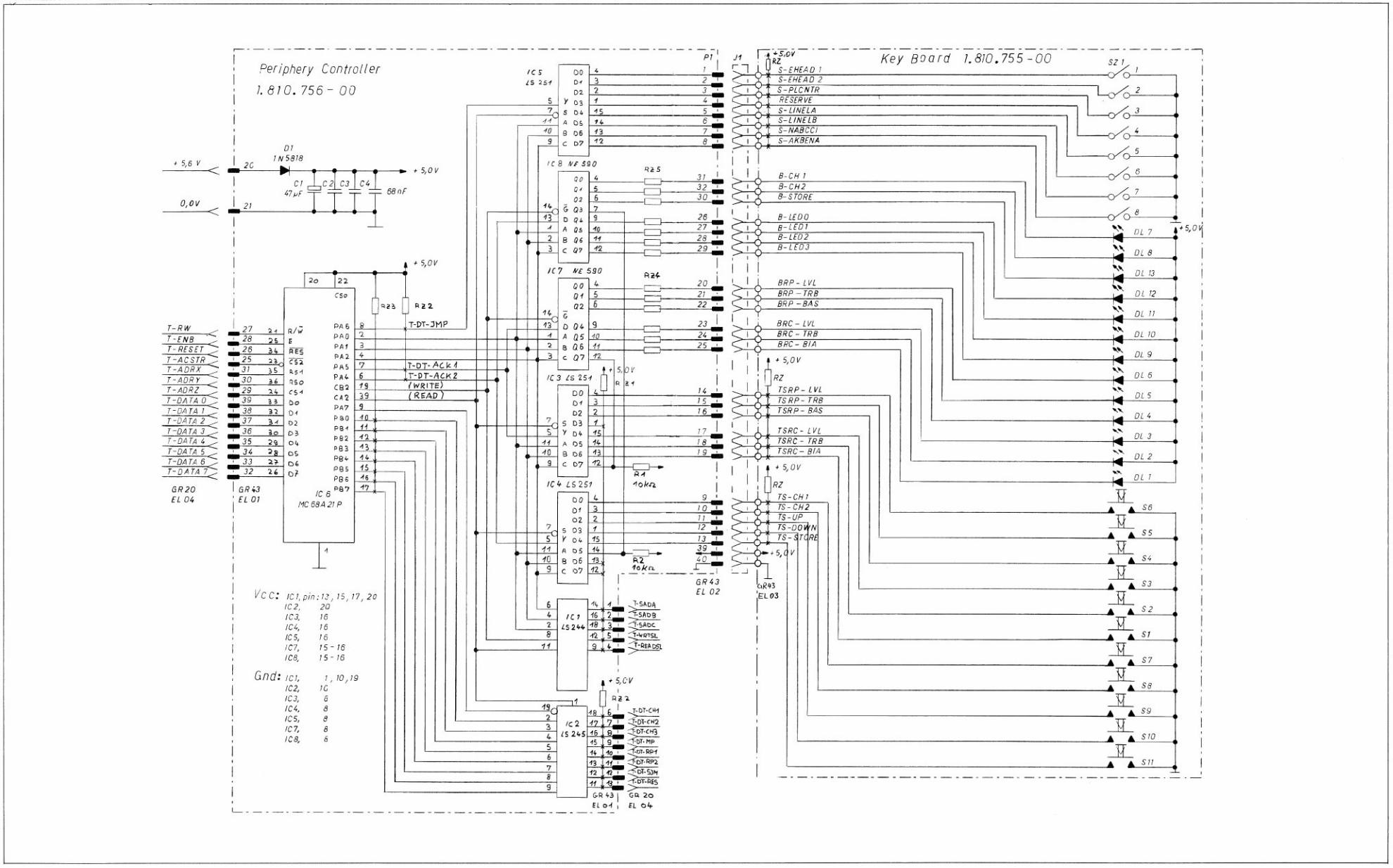

PERIPHERY CONTROLLER UNIT 1.810.753–00 GR20 EL4 "ESE"
PERIPHERY CONTROLLER PCB 1.810.756–00, AUDIO ADJUSTMENT KEYBOARD PCB 1.810.755–00

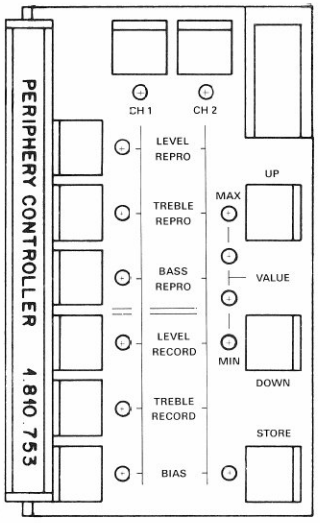

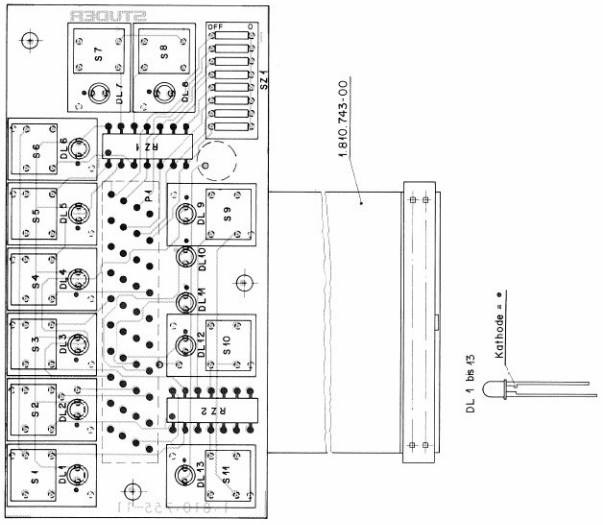

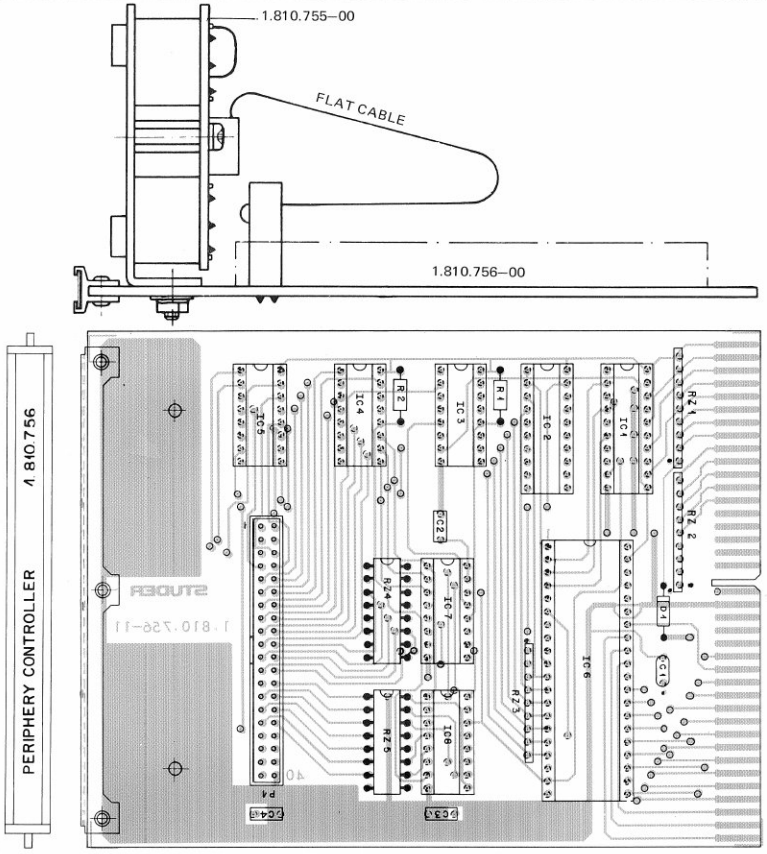

AUDIO ADJUSTMENT KEYBOARD PCB 1.810.755 FIXED AND PLUGGED (VIA FLAT CABLE CONNECTOR) INTO PERIPHERY CONTROLLER PCB 1.810.756–00

IND.	POS.NO.	PART NO.	VALUE	SPECIFICATIONS / EQUIVALENT	MANUF.
	S..0001	55.15.0501	Switch	Serie DIGITAST	Schadow/ITT
	S..0002	55.15.0501	Switch	Serie DIGITAST	Schadow/ITT
	S..0003	55.15.0501	Switch	Serie DIGITAST	Schadow/ITT
	S..0004	55.15.0501	Switch	Serie DIGITAST	Schadow/ITT
	S..0005	55.15.0501	Switch	Serie DIGITAST	Schadow/ITT
	S..0006	55.15.0501	Switch	Serie DIGITAST	Schadow/ITT
	S..0007	55.15.0501	Switch	Serie DIGITAST	Schadow/ITT
	S..0008	55.15.0501	Switch	Serie DIGITAST	Schadow/ITT
	S..0009	55.15.0501	Switch	Serie DIGITAST	Schadow/ITT
	S..0010	55.15.0501	Switch	Serie DIGITAST	Schadow/ITT
	S..0011	55.15.0501	Switch	Serie DIGITAST	Schadow/ITT
	DL.0001	50.04.2130	CQY 11-5	Q 62703-Q 575	Sie
	DL.0002	50.04.2130	CQY 11-5	Q 62703-Q 575	Sie
	DL.0003	50.04.2130	CQY 11-5	Q 62703-Q 575	Sie
	DL.0004	50.04.2130	CQY 11-5	Q 62703-Q 575	Sie
	DL.0005	50.04.2130	CQY 11-5	Q 62703-Q 575	Sie
	DL.0006	50.04.2130	CQY 11-5	Q 62703-Q 575	Sie
	DL.0007	50.04.2130	CQY 11-5	Q 62703-Q 575	Sie
	DL.0008	50.04.2130	CQY 11-5	Q 62703-Q 575	Sie
	DL.0009	50.04.2130	CQY 11-5	Q 62703-Q 575	Sie
	DL.0010	50.04.2130	CQY 11-5	Q 62703-Q 575	Sie
	DL.0011	50.04.2130	CQY 11-5	Q 62703-Q 575	Sie
	DL.0012	50.04.2130	CQY 11-5	Q 62703-Q 575	Sie
	DL.0013	50.04.2129	CQY 11-5	Q 62703-Q 571	Sie
	J..0001	54.14.5023	40 cont.	See note 1	
	RZ.0001	57.83.3332	3.3 kOhm	See note 2	
	RZ.0002	57.83.3332	3.3 kOhm	See note 2	
	SZ.0001	55.01.0168		See note 3	

Note 1 - Yamaichi Nr. FAS-40-17, Burndy Nr. FAS-40 BM-7P
Connection cable Studer Nr. 1.810.743.00

Note 2 - Network, 13 = 3.3 kOhm
Beckmann Nr. 89-1-R 3.3K
Allen Bradley Nr. 34 A 3324
National Nr. RA 13-3.3KN

Note 3 - Switch array: AMP Nr. 435166-5
SAE Nr. 1008-692

MANUFACTURER: Sie=Siemens

ORIG 81/10/14

IND.	POS.NO.	PART NO.	VALUE	SPECIFICATIONS / EQUIVALENT	MANUF.
	C..0001	59.26.0470	47 uF	-20%, 6.3V, Sal	Ph
	C..0002	59.99.0205	68 nF	-20%, Ce	
	C..0003	59.99.0205	68 nF	-20%, Ce	
	C..0004	59.99.0205	68 nF	-20%, Ce	
	D..0001	50.04.0512	1N5818	1N5819	Mot
	IC.0001	50.06.0244	74LS244	SN74LS244N	AMI,MM,Mot,TI
	IC.0002	50.06.0245	SN74LS245N		TI
	IC.0003	50.06.0251	SN74LS251N	AM74LS251N	AMI,TI
	IC.0004	50.06.0251	SN74LS251N	AM74LS251N	AMI,TI
	IC.0005	50.06.0251	SN74LS251N	AM74LS251N	AMI,TI
	IC.0006	50.16.0106	MC68A21P	S68A21P, F68A21P	AMI,Fc,Mot
	IC.0007	50.15.0102	NE590N		Sig
	IC.0008	50.15.0102	NE590N		Sig
	P..0001	54.14.2004	40 cont.	Yamaichi Nr. FAP-40-0804	
	R..0001	57.11.4103	10 kOhm		
	R..0002	57.11.4103	10 kOhm		
	RZ.0001	1.010.014.57		Network 8 * 10 kOhm, 10%	
	RZ.0002	1.010.014.57		Network 8 * 10 kOhm, 10%	
	RZ.0003	1.010.014.57		Network 8 * 10 kOhm, 10%	
	RZ.0004	57.88.3151	150 Ohm	See note 1	
	RZ.0005	57.88.3151	150 Ohm	see note 1	

Note 1 - Network 8 * 150 Ohm
Allen Bradley Nr. 316 8 151
Beckmann Nr. 898-3-R 150
Epitek Nr. 1208-151 G

Ce=Ceramic, Sal=Solid aluminium

MANUFACTURER: AMI=American Microsystem Inc.,
MM=Monolitic Memories Inc., Mot=Motorola, Ph=Philips,
Sig=Signetics, TI=Texas Instruments

ORIG 81/10/14

BUS CONVERTER PCB 1.810.754–00 GR20 EL5 "ESE"

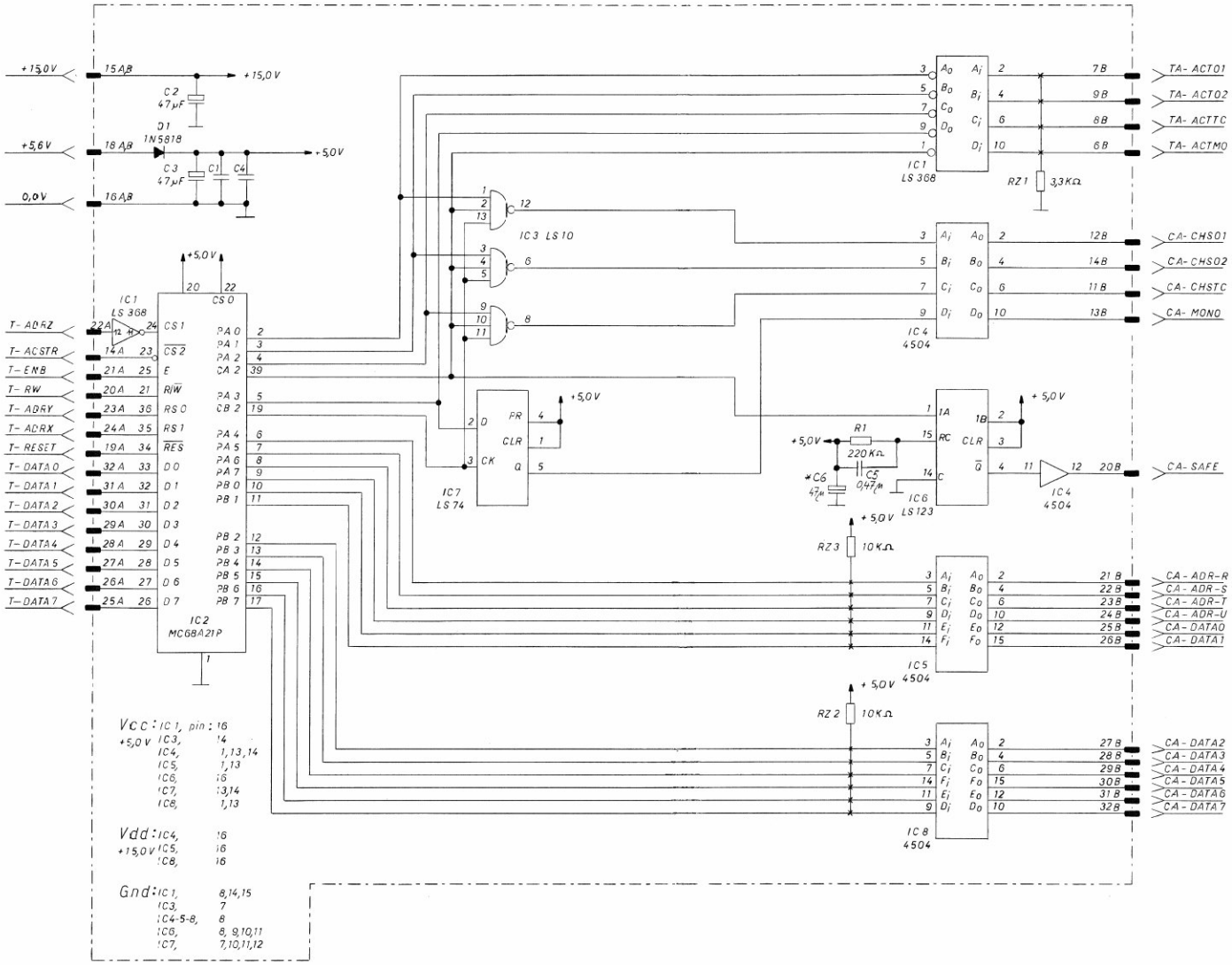

✱ HAS BEEN MODIFIED

BUS CONVERTER PCB 1.810.754–00 GR20 EL5 "ESE"

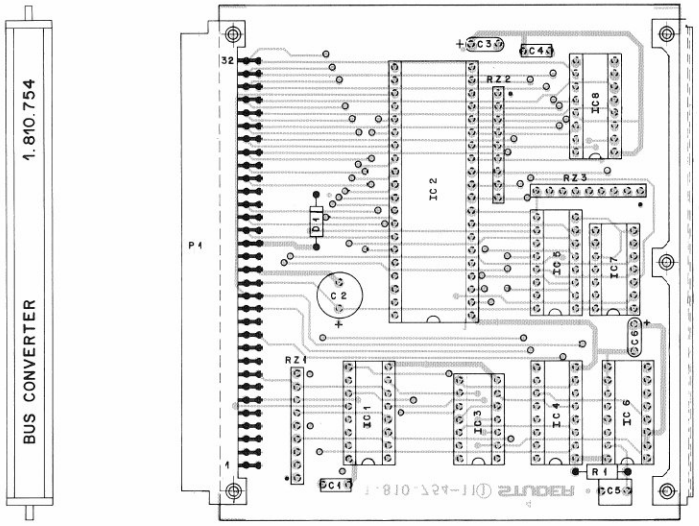

IND.	POS.NO.	PART NO.	VALUE	SPECIFICATIONS / EQUIVALENT	MANUF.
	C....1	59.99.0205	68 nF	-20%, Ce	
	C....2	59.22.5470	47 uF	-10%, 25V, El	
	C....3	59.26.0470	47 uF	-20%, 6.3V, Sal	
	C....4	59.99.0205	68 nF	-20%, Ce	
	C....5	59.06.0474	0.47 uF	10%, 63V	
(00)	C....6	59.99.0205	68 nF	-20%, Ce	
(01)	C....6	59.26.0470	47 uF	-20%, 6.3V, Sal	
	D....1	50.04.0512	1N5818	1N5819	Mot
	IC....1	50.06.0368	74LS368PC	SN74LS368AN	Fc+TI
	IC....2	50.16.0106	MC68A21P	S68A21P, F68A21P	AMI+Fc+Mot
	IC....3	50.06.0010	N74LS 10N	SN74LS 10N	Sig+TI
	IC....4	50.15.0103	MC3486P	MC14504B	Mot
	IC....5	50.15.0103	MC3486P	MC14504B	Mot
	IC....6	50.06.0123	SN74LS123N		TI
	IC....7	50.06.0074	N74LS 74AN	SN74LS 74N	Sig+TI
	IC....8	50.15.0103	MC3486P	MC14504B	Mot
	P....1	54.11.2004	2*32 cont.	See note 1	
	R....1	57.11.4224	220 kOhm	2%	
	RZ....1	57.88.4332		See note 2	
	RZ....2	1.010.014.57		Network 8 * 10 kOhm, 10%	
	RZ....3	1.010.014.57		Network 8 * 10 kOhm, 10%	

S T U D E R 83/01/17 BBT BUS CONVERTER 1.810.754.00 PAGE 1

IND.	POS.NO.	PART NO.	VALUE	SPECIFICATIONS / EQUIVALENT	MANUF.

(01) 83/01/17 improved stability of monoflop time, reduction of supply voltage spikes by C 6

Note 1 - Burndy Nr. PI 64 B 20 P 00 G 00
Erni Nr. 97.22.333.69% (563.191)
Note 2 - Network 8 * 3.3 kOhm
Sicovend Nr. C09 * 3.3k J
Imetro Nr. R8 3.3k 9%

Ce=Ceramic, El=Electrolytic, Sal=Solid aluminium

MANUFACTURER: AMI=American Microsystem Inc., Fc=Fairchild, Sig=Signetics, St=Studer, TI=Texas Instruments

ORIG 82/01/05 (01) 83/01/17

S T U D E R 83/01/17 BBT BUS CONVERTER 1.810.754.00 PAGE 2

MASTER UNIT 1.810.310–81 GR38
MASTER SWITCHING PCB 1.810.732–00, MASTER CONTROL PCB 1.810.733–00

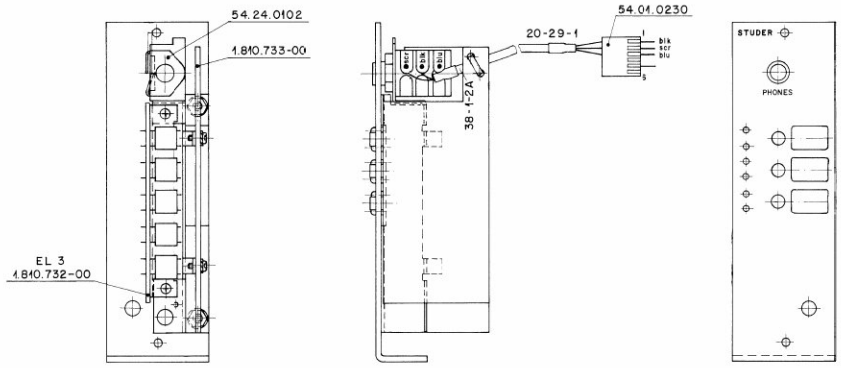

MASTER AND MONITOR CONTROL UNIT 1.810.315–81 GR38
MASTER SWITCHING PCB 1.810.732–00, MASTER CONTROL PCB 1.810.733–00

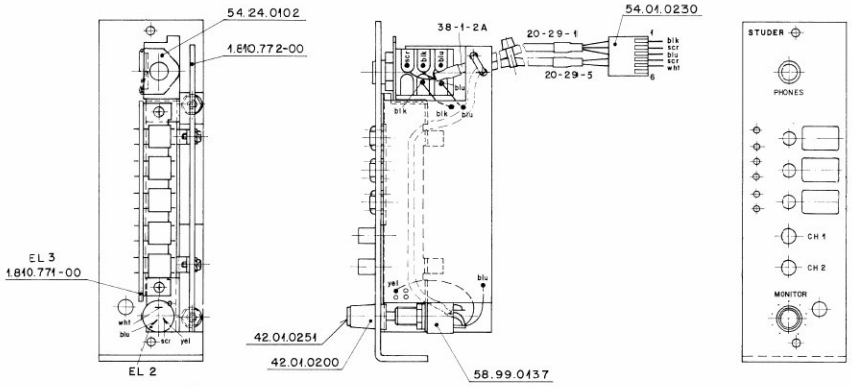

MASTER UNIT 2 SPEEDS 1.810.310–81 / MASTER AND MONITOR CONTROL UNIT 2 SPEEDS 1.810.315–81
MASTER SWITCHING PCB 1.810.732–00, MASTER CONTROL PCB 1.810.733–00

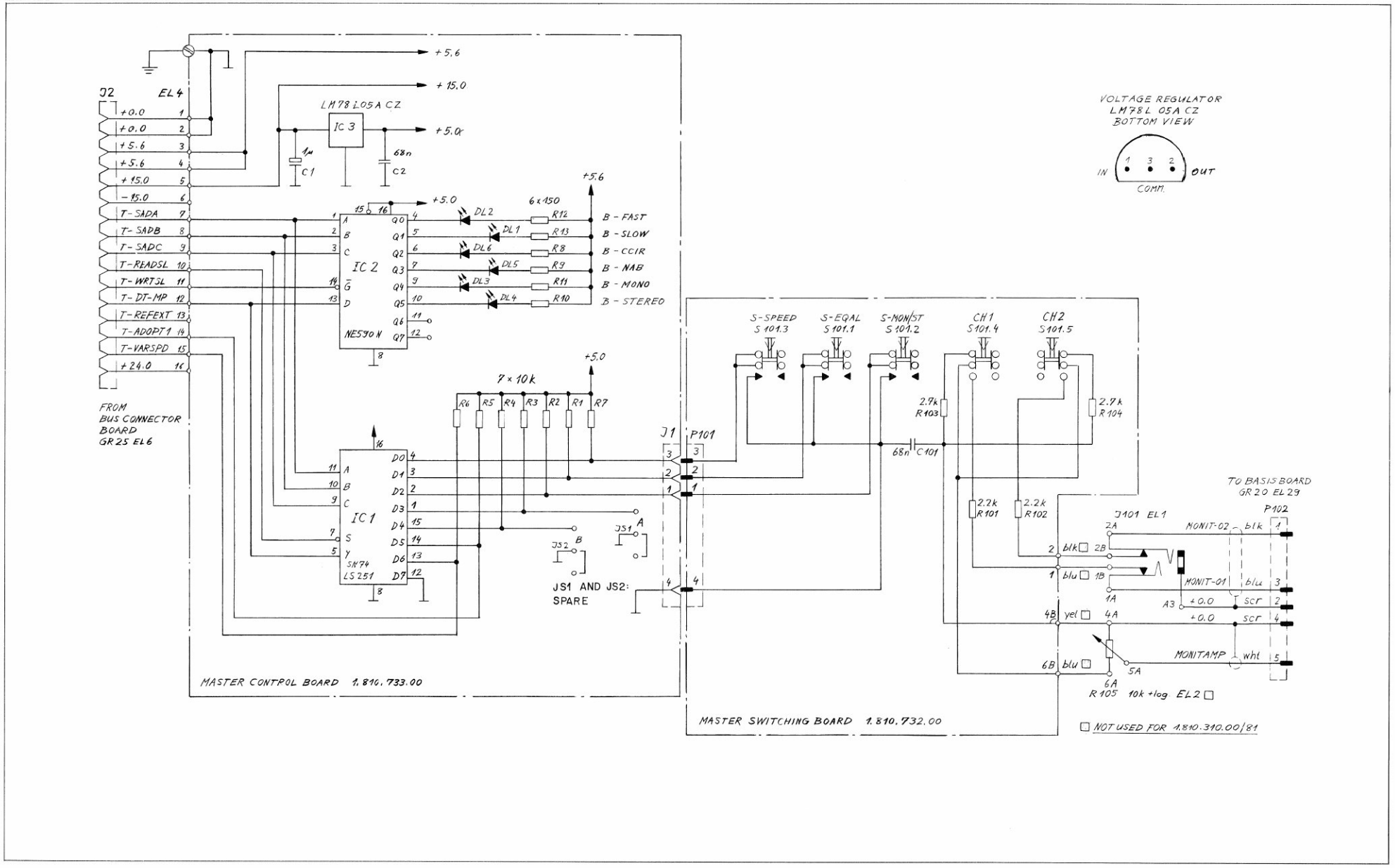

MASTER CONTROL PCB 1.810.733–00

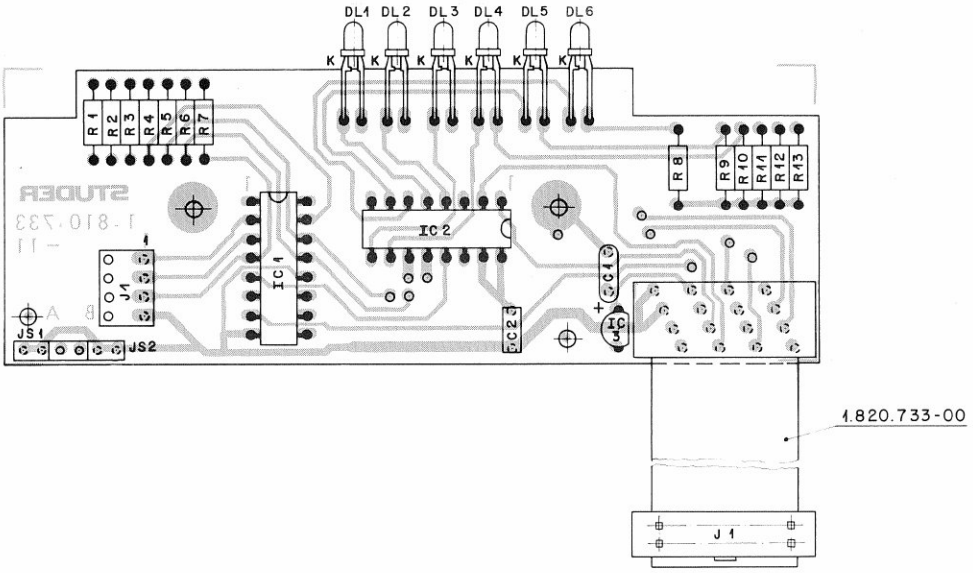

IND.	POS.NO.	PART NO.	VALUE	SPECIFICATIONS / EQUIVALENT	MANUF.
	C...001	59.26.9109	1 uF	16V, Sal	Ph
	C...002	59.99.0205	68 nF	Ce	
	DL..001	50.04.2130	CQV 13-5	Q 62703-Q 575	Sie
	DL..002	50.04.2130	CQV 13-5	Q 62703-Q 575	Sie
	DL..003	50.04.2130	CQV 13-5	Q 62703-Q 575	Sie
	DL..004	50.04.2130	CQV 13-5	Q 62703-Q 575	Sie
	DL..005	50.04.2130	CQV 13-5	Q 62703-Q 575	Sie
	DL..006	50.04.2130	CQV 13-5	Q 62703-Q 575	Sie
	IC..001	50.06.0251	SN74LS251N	AM74LS251N	AMI,TI
	IC..002	50.15.0102	NE590N		Sig
	IC..003	50.10.0107	LM78L05ACZ	uA78L05AWC	Fc,NS
	J...001	54.01.0241	4 cont.	AMP Nr. 163.680-2	
	J...002	54.14.5021	16 cont.	See note 1	
	JS..001			See note 2	
	JS..002			See note 2	
	R...001	57.11.4103	10 kOhm		
	R...002	57.11.4103	10 kOhm		
	R...003	57.11.4103	10 kOhm		
	R...004	57.11.4103	10 kOhm		
	R...005	57.11.4103	10 kOhm		
	R...006	57.11.4103	10 kOhm		
	R...007	57.11.4103	10 kOhm		
	R...008	57.11.4151	150 Ohm		
	R...009	57.11.4151	150 Ohm		
	R...010	57.11.4151	150 Ohm		
	R...011	57.11.4151	150 Ohm		
	R...012	57.11.4151	150 Ohm		
	R...013	57.11.4151	150 Ohm		

IND.	POS.NO.	PART NO.	VALUE	SPECIFICATIONS / EQUIVALENT	MANUF.

Note 1 - Yamaichi Nr. FAS-16-17, Burndy Nr. FRS-16 BD-4P
Connection cable Studer Nr. 1.820.733.00
Note 2 - Contact pin: Studer 54.01.0020, Berg 75 160-102-36
Bridge: Studer 54.01.0021, Philips 2422 024 88003

Ce=Ceramic, Sal=Solid aluminium

MANUFACTURER: AMI=American Microsystem Inc., Fc=Fairchild
NS=National Semiconductors, Ph=Philips, Sie=Siemens,
Sig=Signetics, TI=Texas Instruments

ORIG 82/08/03

MASTER SWITCHING PCB 1.810.732–00

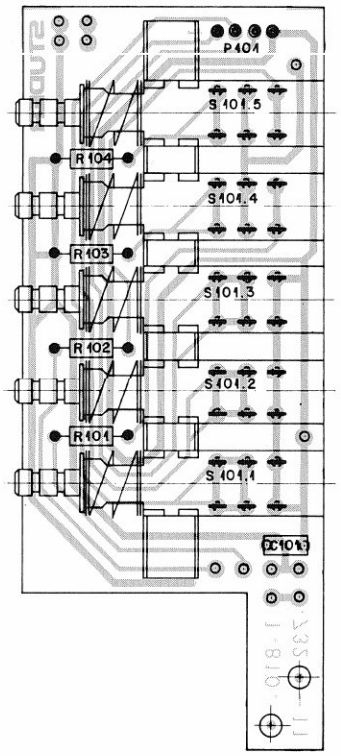

IND.	POS.NO.	PART NO.	VALUE	SPECIFICATIONS / EQUIVALENT	MANUF.
	C...101	59.99.0205	68 nF	Ce	
	J...101	54.24.0102		Cliff Nr. S2/BBB/hc	
	P...101			4 pieces Studer Nr. 1.010.017.54	
	R...101	57.11.4222	2.2 kOhm		
	R...102	57.11.4222	2.2 kOhm		
	R...103	57.11.4272	2.7 kOhm		
	R...104	57.11.4272	2.7 kOhm		
	R...105	58.99.0137	10 kOhm	log., Allen Bradley Nr. WA 1H 048 S 103 AA	
	S...101	1.810.732.01		5*2pole change over switch	St

Ce=Ceramic,

MANUFACTURER: St=Studer

ORIG 82/08/03

S T U D E R 82/08/03 GAE MASTER SWITCH. BOARD 1.810.732.00 PAGE 1

MASTER UNIT, 3 SPEEDS 1.810.312–00 / MASTER UNIT, 4 SPEEDS 1.810.305–00 GR38
MASTER SWITCHING PCB, 3/4 SPEEDS 1.810.764 "ESE" / MASTER CONTROL PCB 3/4 SPEEDS 1.810.765

1.810.312–00

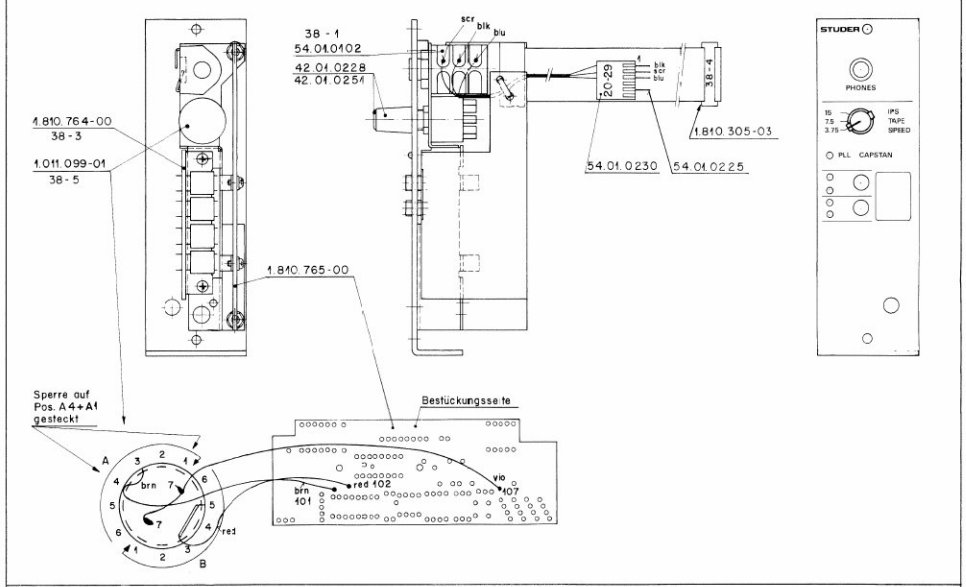

1.810.305–00

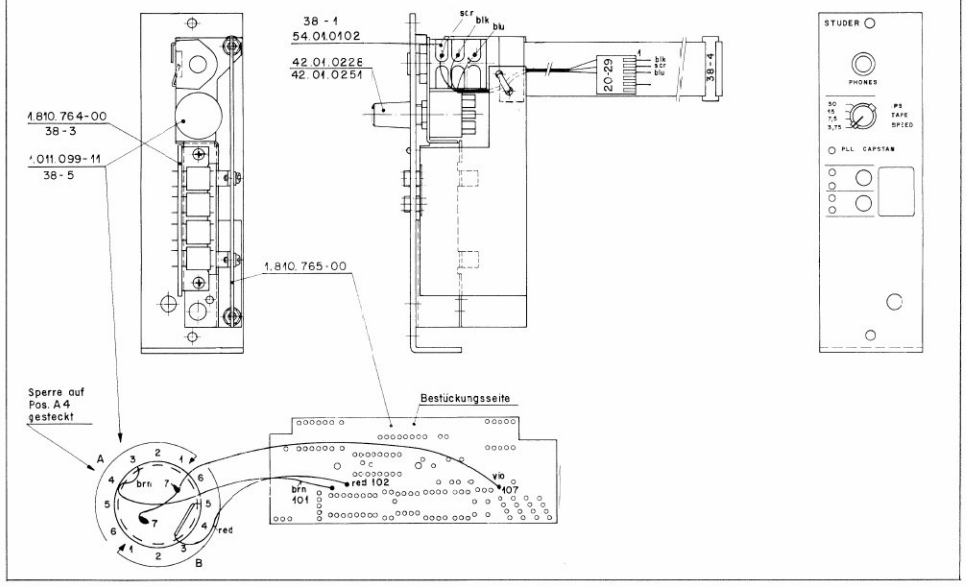

MASTER AND MONITOR CONTROL UNIT, 3 SPEEDS 1.810.317–00
MASTER AND MONITOR CONTROL UNIT 4 SPEEDS 1.810.307–00 GR38
MASTER SWITCHING PCB, 3/4 SPEEDS 1.810.764 "ESE" / MASTER CONTROL PCB 3/4 SPEEDS 1.810.765

1.810.317–00

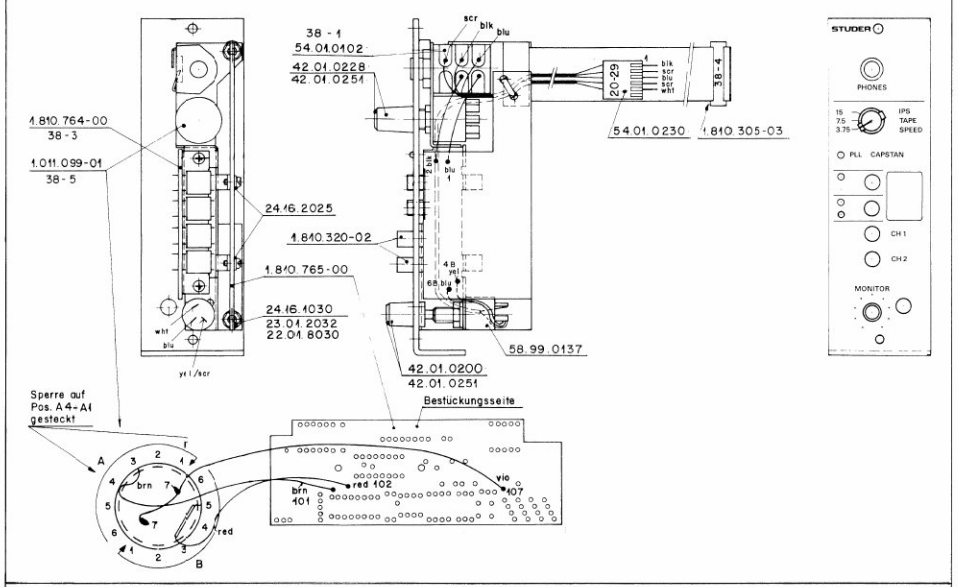

1.810.307–00

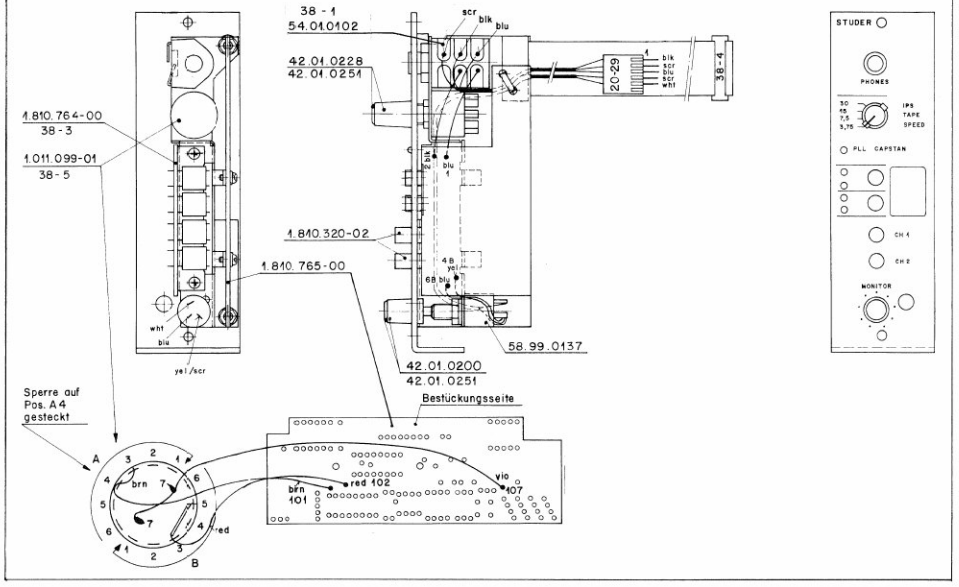

MASTER UNIT, 3 SPEEDS 1.810.312–00 / MASTER UNIT, 4 SPEEDS 1.810.305–00 GR38
MASTER SWITCHING PCB, 3/4 SPEEDS 1.810.764 "ESE" / MASTER CONTROL PCB 3/4 SPEEDS 1.810.765

MASTER AND MONITOR CONTROL UNIT, 3 SPEEDS 1.810.317–00
MASTER AND MONITOR CONTROL UNIT 4 SPEEDS 1.810.307–00 GR38
MASTER SWITCHING PCB, 3/4 SPEEDS 1.810.764 "ESE" / MASTER CONTROL PCB 3/4 SPEEDS 1.810.765

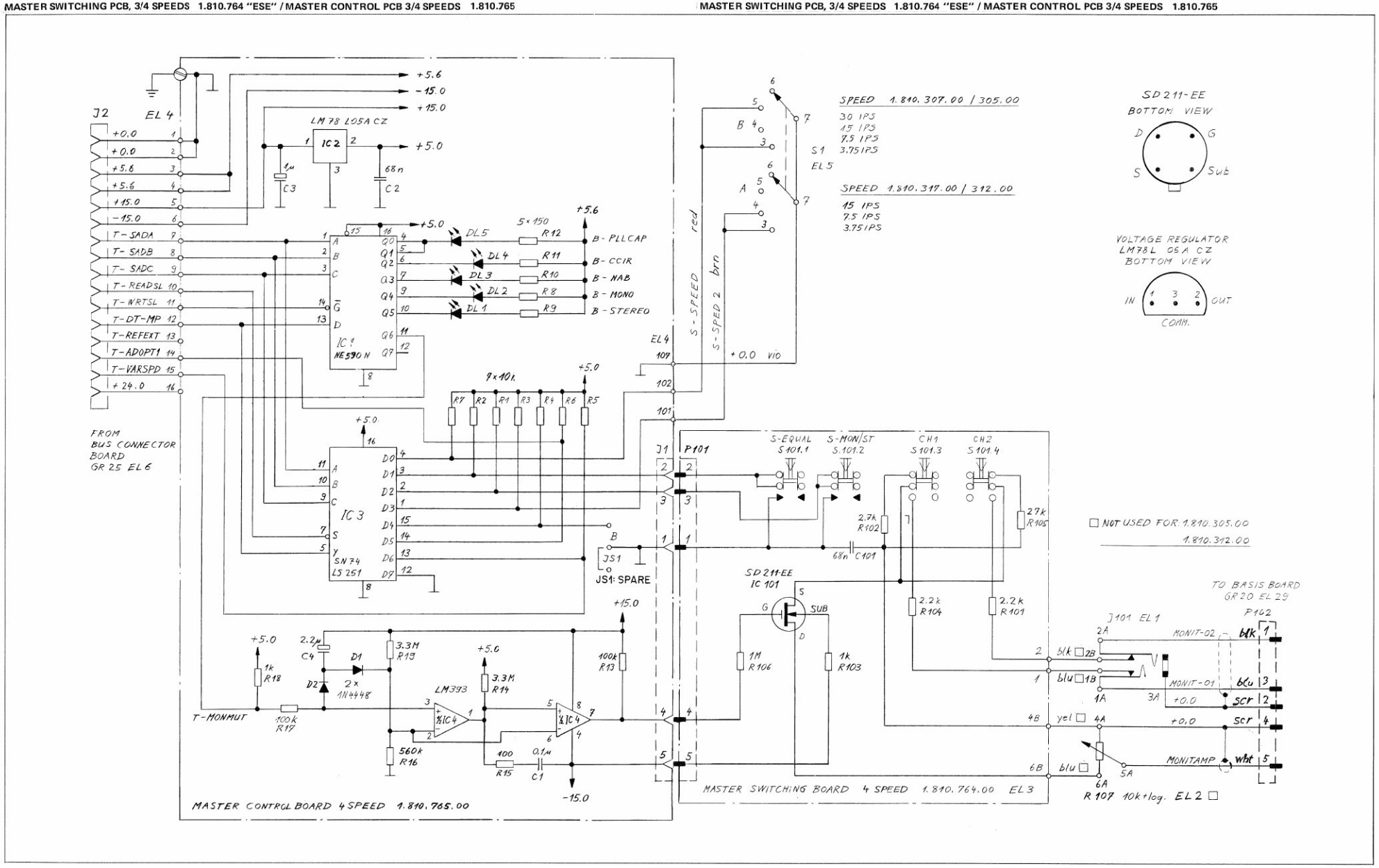

MASTER CONTROL PCB 4 SPEED 1.810.765–00

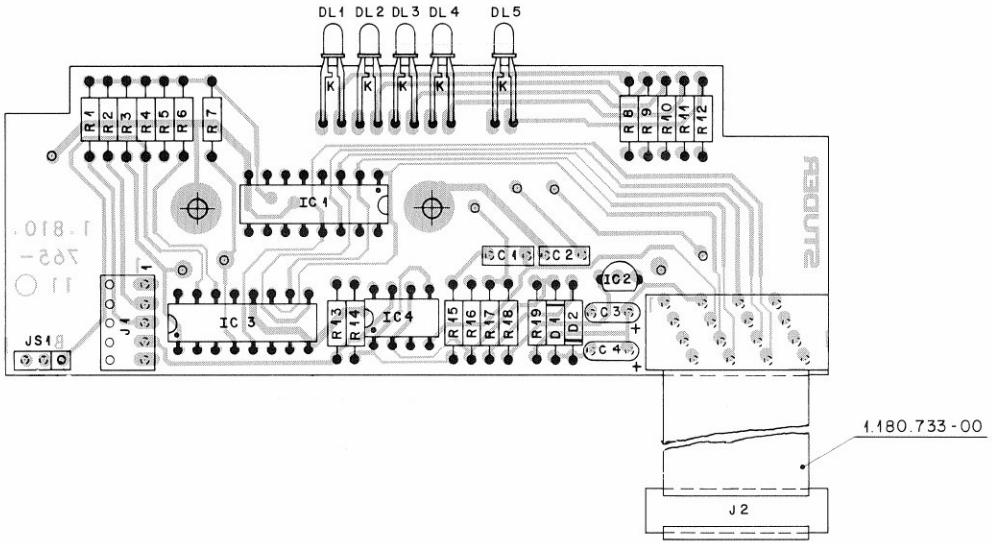

IND.	POS.NO.	PART NO.	VALUE	SPECIFICATIONS / EQUIVALENT	MANUF.
	C...001	59.06.5104	0.1 uF	PETP	ERO,EVOX
	C...002	59.99.0205	68 nF	Ce	
	C...003	59.26.9109	1 uF	16V, Sal	Ph
	C...004	59.26.5229	2.2 uF	16V, Sal	Ph
	D...001	50.04.0125	1N4448		
	D...002	50.04.0125	1N4448		
	DL..001	50.04.2130	CQV 13-5	Q 62703-Q 575	Sie
	DL..002	50.04.2130	CQV 13-5	Q 62703-Q 575	Sie
	DL..003	50.04.2130	CQV 13-5	Q 62703-Q 575	Sie
	DL..004	50.04.2130	CQV 13-5	Q 62703-Q 575	Sie
	DL..005	50.04.2130	CQV 13-5	Q 62703-Q 575	Sie
	IC..001	50.15.0102	NE590N		Sig
	IC..002	50.10.0107	LM78L05ACZ	uA78L05AWC	Fc,NS
	IC..003	50.06.0251	SN74LS251N	AM74LS251N	AMI,TI
	IC..004	50.05.0283	LM393N	LM393P	NS,TI
	J...001	54.01.0288	5 cont.	AMP Nr. 163.680-3	
	J...002	54.14.5021	16 cont.	See note 1	
	JS..001			See note 2	
	R...001	57.11.4103	10 kOhm		
	R...002	57.11.4103	10 kOhm		
	R...003	57.11.4103	10 kOhm		
	R...004	57.11.4103	10 kOhm		
	R...005	57.11.4103	10 kOhm		
	R...006	57.11.4103	10 kOhm		
	R...007	57.11.4103	10 kOhm		
	R...008	57.11.4151	150 Ohm		
	R...009	57.11.4151	150 Ohm		
	R...010	57.11.4151	150 Ohm		
	R...011	57.11.4151	150 Ohm		
	R...012	57.11.4151	150 Ohm		
	R...013	57.11.4104	100 kOhm		

IND.	POS.NO.	PART NO.	VALUE	SPECIFICATIONS / EQUIVALENT	MANUF.
	R...014	57.11.6335	3.3 MOhm		
	R...015	57.11.4101	100 Ohm		
	R...016	57.11.4564	560 kOhm		
	R...017	57.11.4104	100 kOhm		
	R...018	57.11.4102	1 kOhm		
	R...019	57.11.6335	3.3 MOhm		

Note 1 - Yamaichi Nr. FAS-16-17, Burndy Nr. FRS-16 BD-4P
Connection cable Studer Nr. 1.820.733.00
Note 2 - Contact pin: Studer 54.01.0020, Berg 75 160-102-36
Bridge: Studer 54.01.0021, Philips 2422 024 88003

Ce=Ceramic, PETP=Polyester, Sal=Solid aluminium

MANUFACTURER: AMI=American Microsystem Inc., Fc=Fairchild
NS=National Semiconductors Corp., Ph=Philips, Sie=Siemens,
Sig=Signetics, TI=Texas Instruments

ORIG 82/10/27

MASTER SWITCHING PCB 4 SPEED 1.810.764–00 "ESE"

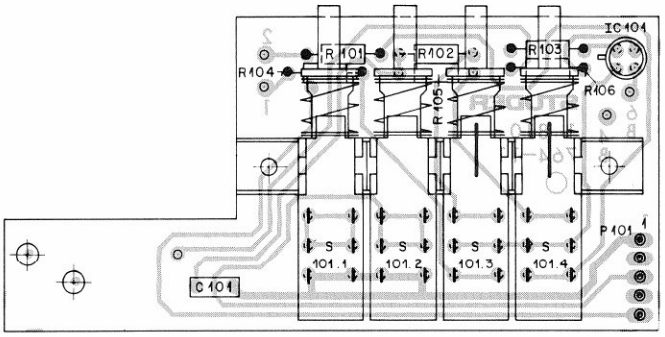

IND.	POS.NO.	PART NO.	VALUE	SPECIFICATIONS / EQUIVALENT	MANUF.
	C...101	59.99.0205	68 nF	Ce	
	IC..101	50.11.0106	SD 211-EE		Sig
	J...101	54.24.0102		Cliff Nr. S2/BBB/hc	
	P...101			5 pieces Studer Nr. 1.010.017.54	
	R...101	57.11.4222	2.2 kOhm		
	R...102	57.11.4272	2.7 kOhm		
	R...103	57.11.4102	1 kOhm		
	R...104	57.11.4222	2.2 kOhm		
	R...105	57.11.4272	2.7 kOhm		
	R...106	57.11.4105	1 MOhm		
	R...107	58.99.0137	10 kOhm	See note 1	
	S...101	1.810.764.01		4*2pole change over switch	St

Note 1 - 10 kOhm Potentiometer +log.
Allen Bradley Nr. WA 1H 048 S103 AA

Ce=Ceramic,

MANUFACTURER: Sig= Signetics, St=Studer

ORIG 82/10/27

S T U D E R 82/10/27 GAE MASTER SWITCH. BOARD 4 SP. 1.810.764.00 PAGE 1

DISTRIBUTION PCB (EXT. VU PANEL) 1.810.720–00 GR90

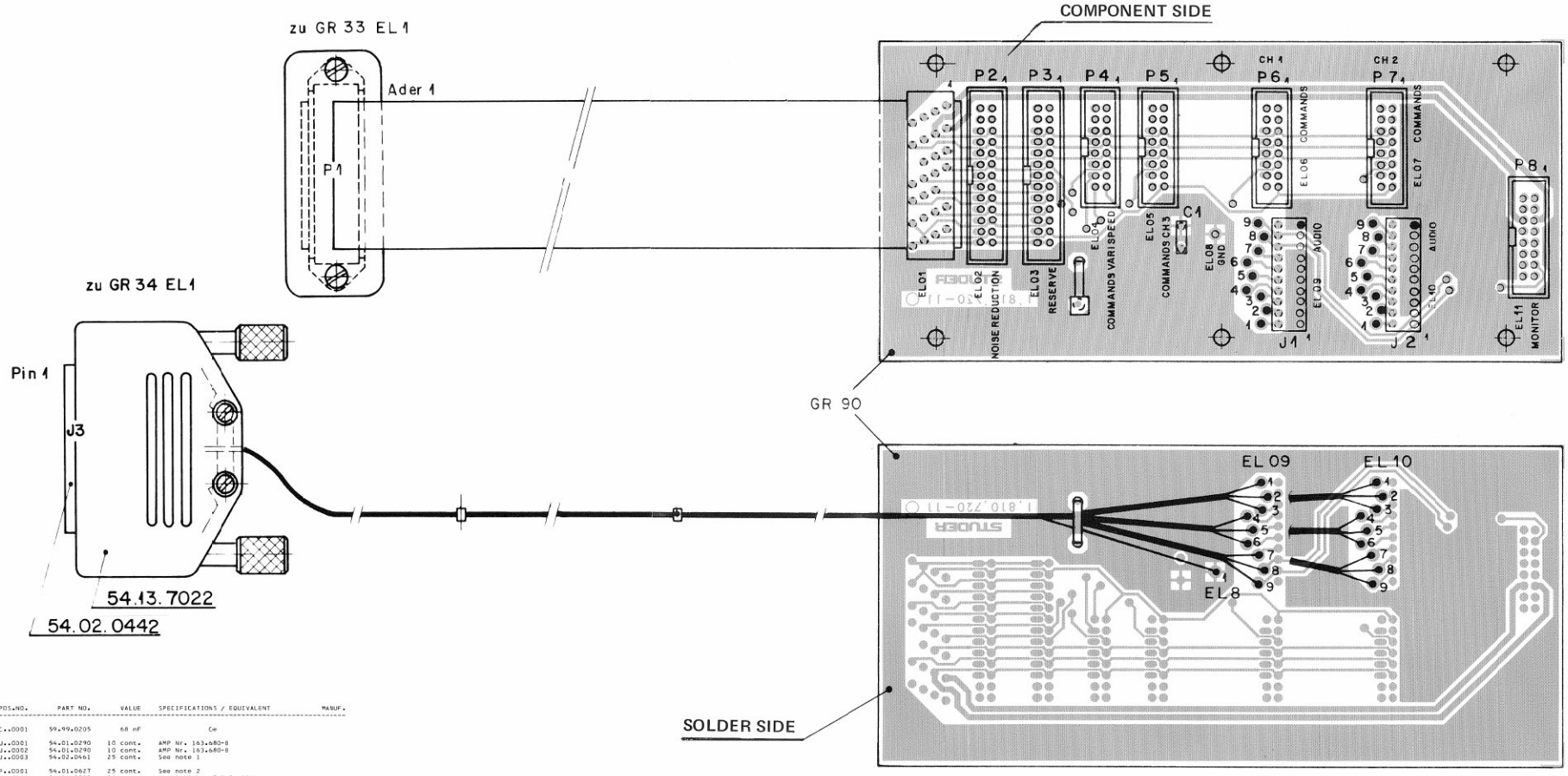

INC.	POS.NO.	PART NO.	VALUE	SPECIFICATIONS / EQUIVALENT	MANUF.
	C..0001	59.99.0205	68 nF	Ce	
	J..0001	54.01.0290	10 cont.	AMP Nr. 163.680-8	
	J..0002	54.01.0290	10 cont.	AMP Nr. 163.680-8	
	J..0003	54.02.0461	25 cont.	See note 1	
	P..0001	54.01.0627	25 cont.	See note 2	
	P..0002	54.14.2003	26 cont.	Yamaichi Nr. FAP-26-0804	
	P..0003	54.14.2003	26 cont.	Yamaichi Nr. FAP-26-0804	
	P..0004	54.14.2002	16 cont.	Yamaichi Nr. FAP-16-0804	
	P..0005	54.14.2002	16 cont.	Yamaichi Nr. FAP-16-0804	
	P..0006	54.14.2002	16 cont.	Yamaichi Nr. FAP-16-0804	
	P..0007	54.14.2002	16 cont.	Yamaichi Nr. FAP-16-0804	
	P..0008	54.14.2002	16 cont.	Yamaicho Nr. FAP-16-0804	

Note 1 - Case: ITT-Cannon Nr. DB 115 339-2
Contacts: AMP Nr. 166 092-1

Note 2 - Anslev Nr. 609-25P, Burndy Nr. FRDS 25 RP-1L
Connection cable Studer Nr. 1.810.748.00

Ce=Ceramic

ORIG 82/11/16

S T U D E R 82/11/16 PB DISTRIBUTION BOARD 1.810.720.00 PAGE 1

NOISE REDUCTION SYSTEM CONTROL PCB 1.810.763–00/–81 GR90 EL2

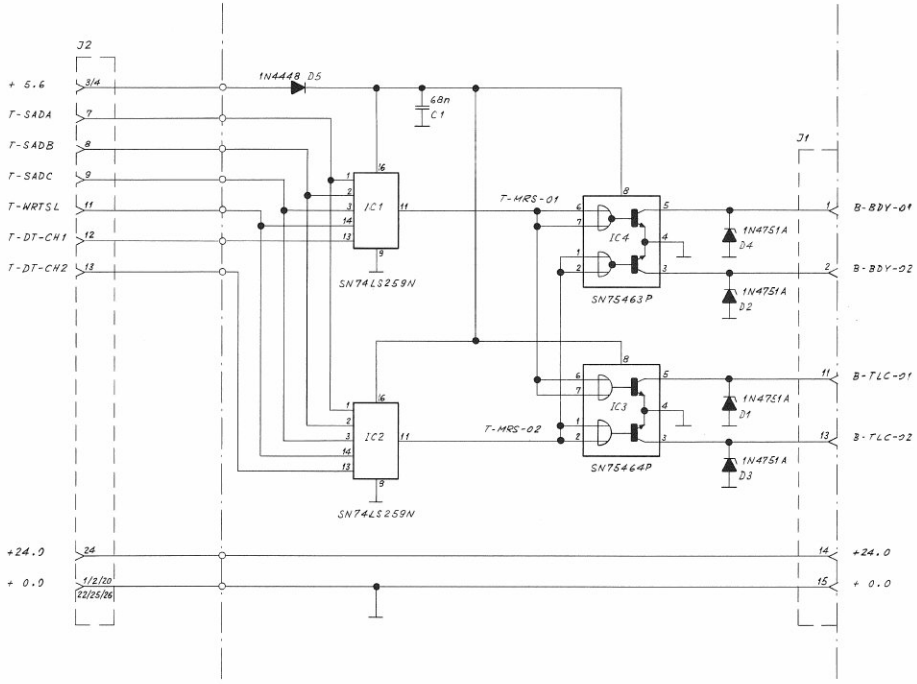

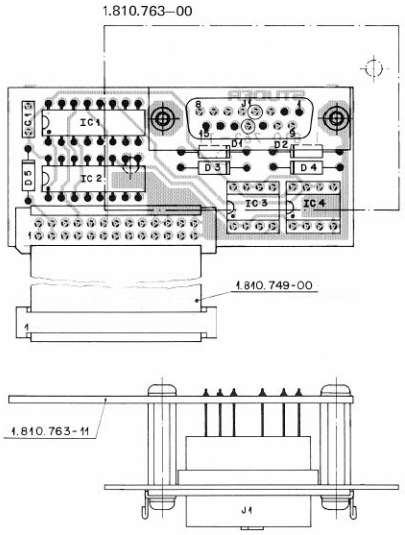

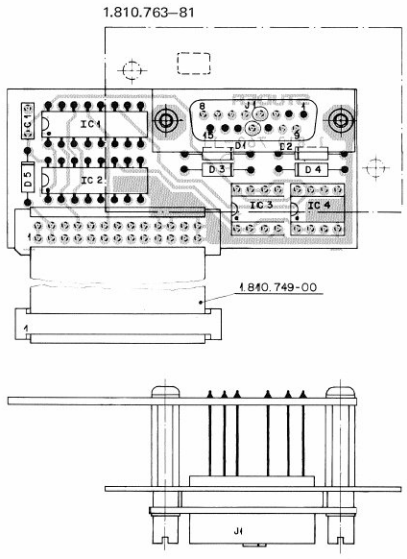

IND.	POS.NO.	PART NO.	VALUE	SPECIFICATIONS / EQUIVALENT	MANUF.
	C..0001	59.99.0205	68 nF	-20%, Ce	
	D..0001	50.04.1506	30 V Z	BZX61C30, BZV85C30, ZY30, 1N4751A	ITT,Mot,Ph
	D..0002	50.04.1506	30 V Z	BZX61C30, BZV85C30, ZY30, 1N4751A	ITT,Mot,Ph
	D..0003	50.04.1506	30 V Z	BZX61C30, BZV85C30, ZY30, 1N4751A	ITT,Mot,Ph
	D..0004	50.04.1506	30 V Z	BZX61C30, BZV85C30, ZY30, 1N4751A	ITT,Mot,Ph
	D..0005	50.04.0125	1N4448		ITT,Ph,Ses,TI
	IC.0001	50.06.0259	SN74LS259N		Fc,Mot,TI
	IC.0002	50.06.0259	SN74LS259N		Fc,Mot,TI
	IC.0003	50.05.0204	SN75464P		NSC,TI
	IC.0004	50.05.0203	SN75463P		NSC,TI
	J..0001			See note 1	
	J..0002	54.14.5022	26 cont.	See note 2	

Note 1 - Case: Studer Nr. 54.02.0441; AMP-Nr. 164 532-1
Contacts: Studer Nr. 54.02.0472, AMP-Nr. 1-66482-8

Note 2 - Yamaichi Nr. FAS-26-17, Burndy Nr. FRS-26 BD-7P
Connection cable Studer Nr. 1.810.749.00

Ce=Ceramic

MANUFACTURER: Fc=Fairchild, ITT=Intermetall, Mot=Motorola,
NSC=National Semiconductor Corp., Ph=Philips,
Ses=Sescosem, TI=Texas Instruments

ORIG 82/08/14

S T U D E R 82/08/14 PB NRS CONTROL BOARD 1.810.763.00 PAGE 1

IND.	POS.NO.	PART NO.	VALUE	SPECIFICATIONS / EQUIVALENT	MANUF.
	C..0001	59.99.0205	68 nF	-20%, Ce	
	D..0001	50.04.1506	30 V Z	BZX61C30, BZV85C30, ZY30, 1N4751A	ITT,Mot,Ph
	D..0002	50.04.1506	30 V Z	BZX61C30, BZV85C30, ZY30, 1N4751A	ITT,Mot,Ph
	D..0003	50.04.1506	30 V Z	BZX61C30, BZV85C30, ZY30, 1N4751A	ITT,Mot,Ph
	D..0004	50.04.1506	30 V Z	BZX61C30, BZV85C30, ZY30, 1N4751A	ITT,Mot,Ph
	D..0005	50.04.0125	1N4448		ITT,Ph,Ses,TI
	IC.0001	50.06.0259	SN74LS259N		Fc,Mot,TI
	IC.0002	50.06.0259	SN74LS259N		Fc,Mot,TI
	IC.0003	50.05.0204	SN75464P		NSC,TI
	IC.0004	50.05.0203	SN75463P		NSC,TI
	J..0001	54.02.0183	15 cont.	See note 1	
	J..0002	54.14.5022	26 cont.	See note 2	

Note 1 - Jack: TRW Nr. DA-15 S (Cannon)

Note 2 - Jack: Yamaichi Nr. FAS-26-17
Burndy Nr. FRS-26 BD-7P
Connection cable: Studer Nr. 1.810.749.00

Ce=Ceramic

MANUFACTURER: Fc=Fairchild, ITT=Intermetall, Mot=Motorola,
NSC=National Semiconductor Corp., Ph=Philips,
Ses=Sescosem, TI=Texas Instruments

ORIG 83/04/22

S T U D E R (00) 83/04/22 PB NRS CONTROL BOARD 1.810.763.81 PAGE 1

★HAS BEEN MODIFIED

PARALLEL REMOTE CONTROL PCB 1.328.201–00

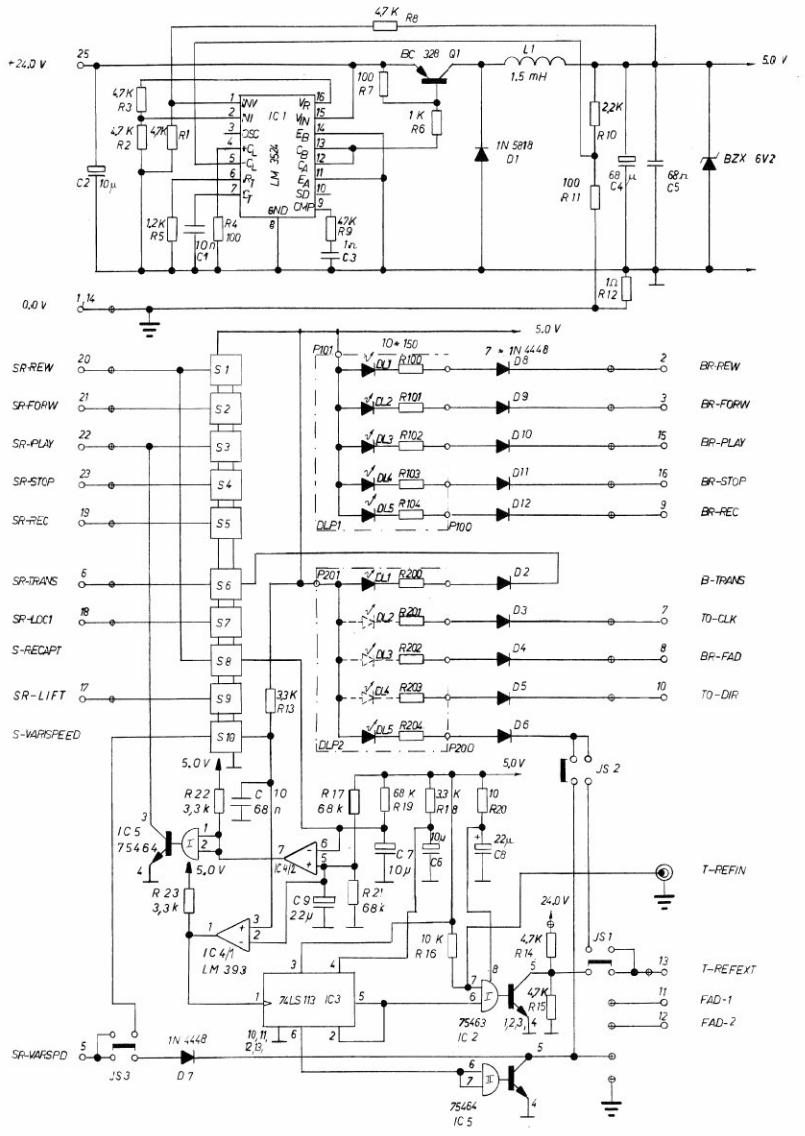

26-11-82	Walter			
STUDER	Parallel Remote Control	SC	1.328.201-00	PAGE 1 OF 1

PARALLEL REMOTE CONTROL PCB 1.328.201–00

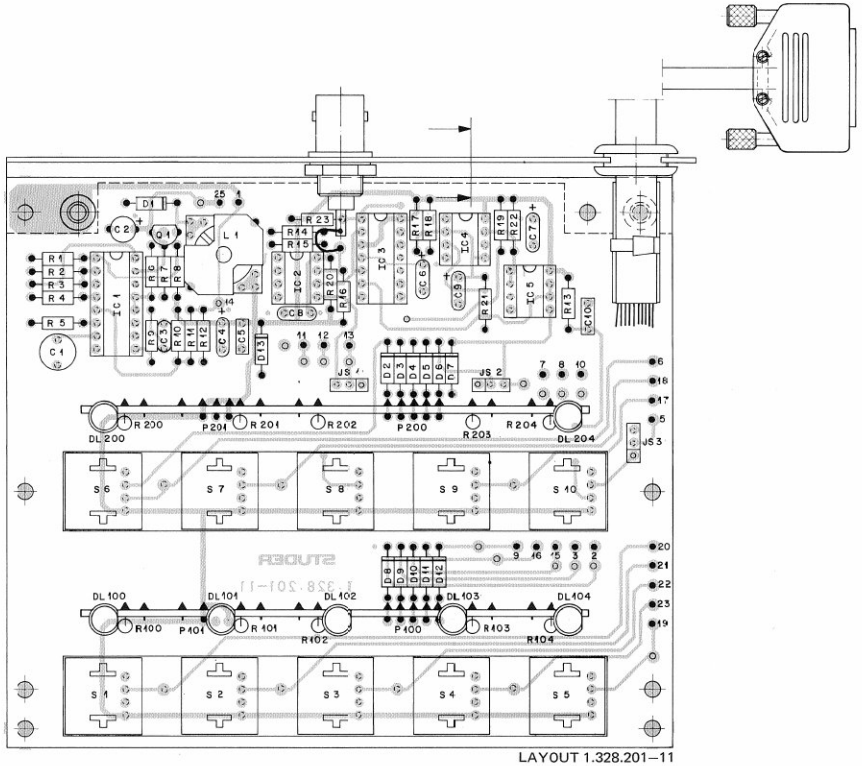

LAYOUT 1.328.201–11

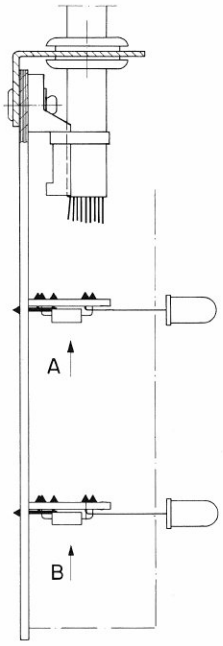

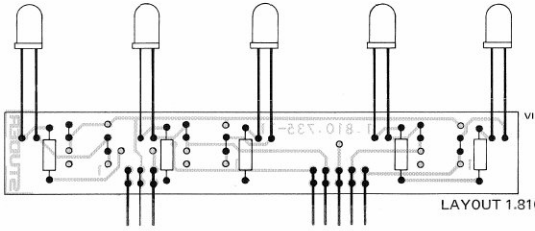

LAYOUT 1.810.735–11

IND.	POS.NO.	PART NO.	VALUE	SPECIFICATIONS / EQUIVALENT	MANUF.
	C..0001	59.05.1103	10 nF	1%, 63V, Pp	
	C..0002	59.22.6100	10 uF	-10%, 40V, El	
	C..0003	59.32.4102	1 nF	10%, 400V, Ce	
	C..0004	59.26.0680	68 uF	20%, 6.3V, Sal	Ph
	C..0005	59.99.0205	68 nF	20%, 100V, Ce	
	C..0006	59.26.2100	10 uF	20%, 16V, Sal	Ph
	C..0007	59.26.2100	10 uF	20%, 16V, Sal	Ph
	C..0008	59.26.1220	22 uF	20%, 10V, Sal	Ph
	C..0009	59.26.1220	22 uF	20%, 10V, Sal	Ph
	C..0010	59.99.0205	68 nF	20%, 100V, Ce	
	D..0001	50.04.0512	1N5818	1N5819	Mot
	D..0002	50.04.0125	1N4448		ITT,Ph,Ses,TI
	D..0003	50.04.0125	1N4448		ITT,Ph,Ses,TI
	D..0004	50.04.0125	1N4448		ITT,Ph,Ses,TI
	D..0005	50.04.0125	1N4448		ITT,Ph,Ses,TI
	D..0006	50.04.0125	1N4448		ITT,Ph,Ses,TI
	D..0007	50.04.0125	1N4448		ITT,Ph,Ses,TI
	D..0008	50.04.0125	1N4448		ITT,Ph,Ses,TI
	D..0009	50.04.0125	1N4448		ITT,Ph,Ses,TI
	D..0010	50.04.0125	1N4448		ITT,Ph,Ses,TI
	D..0011	50.04.0125	1N4448		ITT,Ph,Ses,TI
	D..0012	50.04.0125	1N4448		ITT,Ph,Ses,TI
	D..0013	50.04.1118	6.2 V Z	BZX83C 6.2, BZX55C 6.2, ZPD 6.2	ITT,Ses
	DL.0100	50.04.2112	MV5353	CM-584, 5082-4555	CM,HP,Ms
	DL.0101	50.04.2112	MV5353	CM-584, 5082-4555	CM,HP,Ms
	DL.0102	50.04.2112	MV5353	CM-584, 5082-4555	CM,HP,Ms
	DL.0103	50.04.2112	MV5353	CM-584, 5082-4555	CM,HP,Ms
	DL.0104	50.04.2111	MV5753	CM-284, 5082-4655	CM,HP,Ms
	DL.0200	50.04.2112	MV5353	CM-584, 5082-4555	CM,HP,Ms
	DL.0204	50.04.2112	MV5353	CM-584, 5082-4555	CM,HP,Ms
	IC.0001	50.05.0279	SG3524A		SG,TI
	IC.0002	50.05.0203	SN75463F	SN75463JG, SN55463JG, DS3613N	NS,TI
	IC.0003	50.06.0113	N74LS113N	SN74LS113N	Sig,TI
	IC.0004	50.05.0283	LM393N		TI,NS

IND.	POS.NO.	PART NO.	VALUE	SPECIFICATIONS / EQUIVALENT	MANUF.
	IC.0005	50.05.0204	SN75464P	DS3614N	NS,TI
	J5.0001			See note 1	
	J5.0002			See note 1	
	J5.0003			See note 1	
	L..0001	1.022.197.00	1.5 mH		St
	P..0100	54.01.0269	5 cont.	AMP Nr. 163.740-3	
	P..0101	54.01.0227	3 Cont.	AMP Nr. 163.740-1	
	P..0200	54.01.0269	5 cont.	AMP Nr. 163.740-3	
	P..0201	54.01.0227	3 cont.	AMP Nr. 163.740-1	
	Q..0001	50.03.0351	BC327-25		NEC,Sie,ITT,Ph,Tf
	R..0001	57.11.4472	4.7 kOhm		
	R..0002	57.11.4472	4.7 kOhm		
	R..0003	57.11.4472	4.7 kOhm		
	R..0004	57.11.4101	100 Ohm		
	R..0005	57.11.4122	1.2 kOhm		
	R..0006	57.11.4102	1 kOhm		
	R..0007	57.11.4101	100 Ohm		
	R..0008	57.11.4472	4.7 kOhm		
	R..0009	57.11.4473	47 kOhm		
	R..0010	57.11.4222	2.2 kOhm		
	R..0011	57.11.4101	100 Ohm		
	R..0012	57.11.4109	1 Ohm		
	R..0013	57.11.4332	3.3 kOhm		
	R..0014	57.11.4472	4.7 kOhm		
	R..0015	57.11.4472	4.7 kOhm		
	R..0016	57.11.4103	10 kOhm		
	R..0017	57.11.4683	68 kOhm		
	R..0018	57.11.4332	3.3 kOhm		
	R..0019	57.11.4683	68 kOhm		
	R..0020	57.11.4100	10 Ohm		
	R..0021	57.11.4683	68 kOhm		
	R..0022	57.11.4332	3.3 kOhm		

IND.	POS.NO.	PART NO.	VALUE	SPECIFICATIONS / EQUIVALENT	MANUF.
	R..0023	57.11.4332	3.3 kOhm		
	R..0100	57.11.4151	150 Ohm		
	R..0101	57.11.4151	150 Ohm		
	R..0102	57.11.4151	150 Ohm		
	R..0103	57.11.4151	150 Ohm		
	R..0104	57.11.4151	150 Ohm		
	R..0200	57.11.4151	150 Ohm		
	R..0201	57.11.4151	150 Ohm		
	R..0202	57.11.4151	150 Ohm		
	R..0203	57.11.4151	150 Ohm		
	R..0204	57.11.4151	150 Ohm		
	S..0001	55.03.0260	Switch	Sigma Nr. MCFH 2 T	
	S..0002	55.03.0260	Switch	Sigma Nr. MCFH 2 T	
	S..0003	55.03.0260	Switch	Sigma Nr. MCFH 2 T	
	S..0004	55.03.0260	Switch	Sigma Nr. MCFH 2 T	
	S..0005	55.03.0260	Switch	Sigma Nr. MCFH 2 T	
	S..0006	55.03.0260	Switch	Sigma Nr. MCFH 2 T	
	S..0007	55.03.0260	Switch	Sigma Nr. MCFH 2 T	
	S..0008	55.03.0260	Switch	Sigma Nr. MCFH 2 T	
	S..0009	55.03.0260	Switch	Sigma Nr. MCFH 2 T	
	S..0010	55.03.0260	Switch	Sigma Nr. MCFH 2 T	

Note 1 - Contact pin: Studer 54.01.0020, Berg 75 160-102-36
Bridge: Studer 54.01.0021, Philips 2422 024 88003

Ce= Ceramic, El=Electrolytic, Sal=Solid aluminium, Pp=Polypropylen

MANUFACTURER: CM=Chicago Miniatur, HP=Hewlett Packard,
ITT=Intermetall, Ms=Monsanto, Mot=Motorola
NEC=Nippon Electric Corp., NS=National Semiconductors,
Ph=Philips, Ses=Sescosem, SG=Silicon General,
Sie=Siemens, Sig=Signetics, St=Studer,
TI=Texas Instruments, Tf=Telefunken

DRIG 83/01/12

PARALLEL REMOTE CONTROL PCB 1.328.201--81

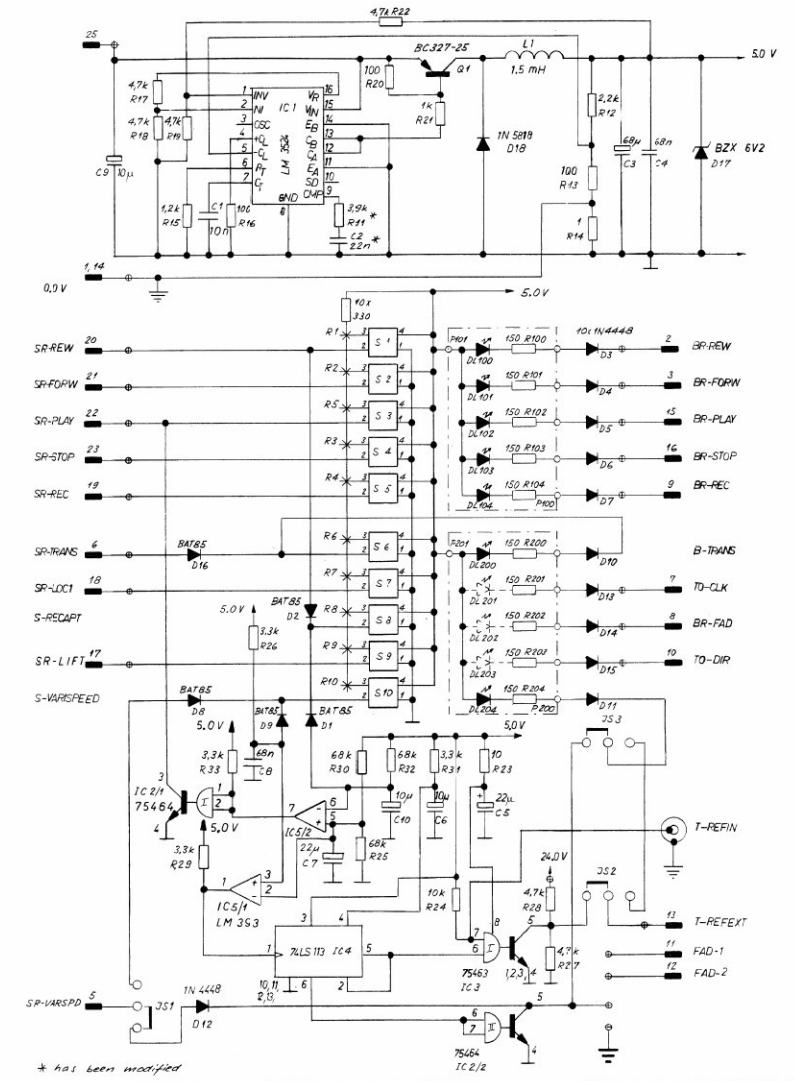

17.10.84 Buchegger (1) 7.3.85 Buchegger				
STUDER	Parallel Remote Control	SC	1.328.201-81	PAGE 1 OF 1

PARALLEL REMOTE CONTROL PCB 1.328.201–81

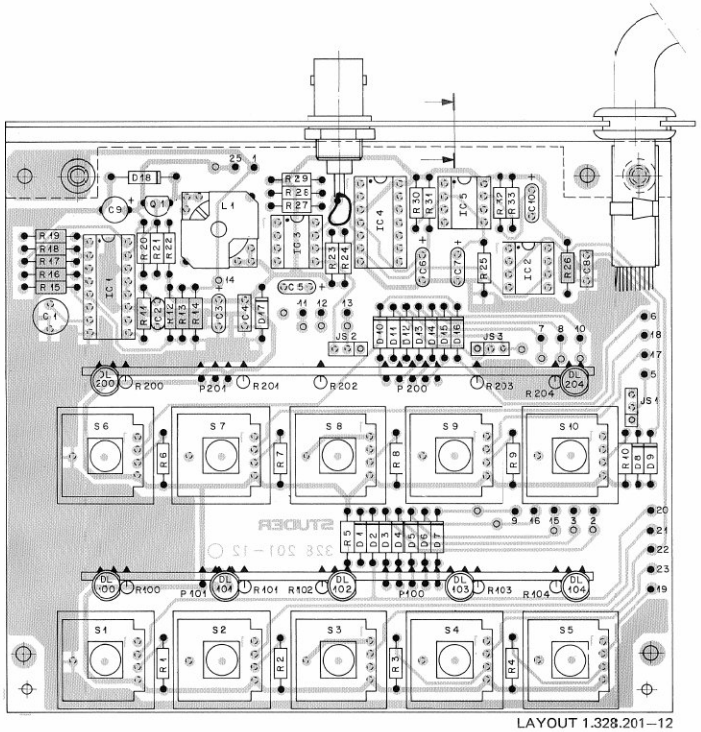

LAYOUT 1.328.201–12

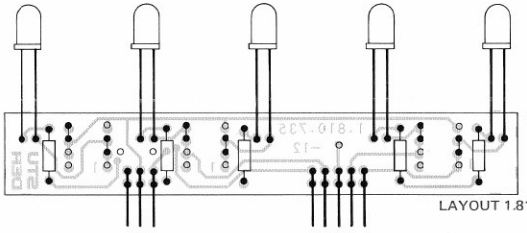

LAYOUT 1.810.735–12

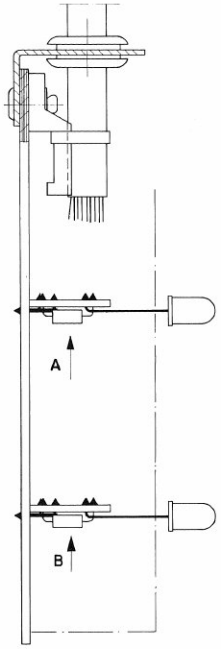

IND.	POS.NO.	PART NO.	VALUE	SPECIFICATIONS / EQUIVALENT	MANUF.
	DL..201		not used		
	DL..202		not used		
	DL..203		not used		
	DL..204	50.04.2112	MW5353	CM4-584B, HLMP-3401	CM+GI+HP
	IC....1	50.05.0279	SG3524BN		SG
	IC....2	50.05.0204	SN75464P	DS36148	NS+TI
	IC....3	50.05.0203	SN7463P	SN75463JG, SN55463JG, DS3613N	NS+TI
	IC....4	50.06.0113	N74S113N	SN74LS.13N	Sig+TI
	IC....5	50.05.0283	LM393N		NS+THO+TI
	JS....1			See note 1	
	JS....2			See note 1	
	JS....3			See note 1	
	L.....1	1.022.197.00	1.5 nH		St
	P...100	54.01.0269	5 cont.	AMP Nr. 163.740-3	
	P...101	54.01.0227	3 cont.	AMP Nr. 163.740-1	
	P...200	54.01.0269	5 cont.	AMP Nr. 163.740-3	
	P...201	54.01.0227	3 cont.	AMP Nr. 163.740-1	
	Q.....1	50.03.0351	BC327-25		ITT+Ph+Sie
	R.....1	57.11.4331	330 Ohm		
	R.....2	57.11.4331	330 Ohm		
	R.....3	57.11.4331	330 Ohm		
	R.....4	57.11.4331	330 Ohm		
	R.....5	57.11.4331	330 Ohm		
	R.....6	57.11.4331	330 Ohm		
	R.....7	57.11.4331	330 Ohm		
	R.....8	57.11.4331	330 Ohm		
	R.....9	57.11.4331	330 Ohm		
	R....10	57.11.4331	330 Ohm		
(00)	R....11	57.11.4473	47 kOhm		
(01)	R....11	57.11.4392	3.9 kOhm		
	R....12	57.11.4222	2.2 kOhm		

S T U D E R (01) 85/03/07 PB REMOTE CONTROL BOARD 1.328.201.81 PAGE 2

IND.	POS.NO.	PART NO.	VALUE	SPECIFICATIONS / EQUIVALENT	MANUF.
	R....13	57.11.4101	100 Ohm		
	R....14	57.11.4109	1 Ohm		
	R....15	57.11.4122	1.2 kOhm		
	R....16	57.11.4101	100 Ohm		
	R....17	57.11.4472	4.7 kOhm		
	R....18	57.11.4472	4.7 kOhm		
	R....19	57.11.4472	4.7 kOhm		
	R....20	57.11.4101	100 Ohm		
	R....21	57.11.4102	1 kOhm		
	R....22	57.11.4472	4.7 kOhm		
	R....23	57.11.4100	10 Ohm		
	R....24	57.11.4103	10 kOhm		
	R....25	57.11.4683	68 kOhm		
	R....26	57.11.4332	3.3 kOhm		
	R....27	57.11.4472	4.7 kOhm		
	R....28	57.11.4472	4.7 kOhm		
	R....29	57.11.4332	3.3 kOhm		
	R....30	57.11.4683	68 kOhm		
	R....31	57.11.4332	3.3 kOhm		
	R....32	57.11.4683	68 kOhm		
	R....33	57.11.4332	3.3 kOhm		
	R...100	57.11.4151	150 Ohm		
	R...101	57.11.4151	150 Ohm		
	R...102	57.11.4151	150 Ohm		
	R...103	57.11.4151	150 Ohm		
	R...104	57.11.4151	150 Ohm		
	R...200	57.11.4151	150 Ohm		
	R...201	57.11.4151	150 Ohm		
	R...202	57.11.4151	150 Ohm		
	R...203	57.11.4151	150 Ohm		
	R...204	57.11.4151	150 Ohm		
	S.....1			See note 2	
	S.....2			See note 2	
	S.....3			See note 2	
	S.....4			See note 2	
	S.....5			See note 2	

S T U D E R (01) 85/03/07 PB REMOTE CONTROL BOARD 1.328.201.81 PAGE 3

IND.	POS.NO.	PART NO.	VALUE	SPECIFICATIONS / EQUIVALENT	MANUF.
	C.....1	59.05.1103	10 nF	1%, ±3V, Pp	
(00)	C.....2	59.32.1102	1 nF	10%, 400V, Ce	
(01)	C.....2	59.06.0223	22 nF	10%, PETP	
	C.....3	59.26.0680	68 uF	20%, 6.3V, Sal	Ph
	C.....4	59.06.0683	68 nF	20%, 100V, PETP	
	C.....5	59.26.1220	22 uF	20%, 10V, Sal	Ph
	C.....6	59.26.2100	10 uF	20%, 16V, Sal	Ph
	C.....7	59.26.1220	22 uF	20%, 10V, Sal	Ph
	C.....8	59.06.0683	68 nF	20%, 100V, PETP	
	C.....9	59.22.6100	10 uF	-10%, 40V, El	
	C....10	59.26.2100	10 uF	20%, 16V, Sal	Ph
	D.....1	50.04.0127	BAT 85	BAS 40-02	Ph+Sie
	D.....2	50.04.0127	BAT 85	BAS 40-02	Ph+Sie
	D.....3	50.04.0125	1N4448		Fc+ITT+Ph+Ses+Tf
	D.....4	50.04.0125	1N4448		Fc+ITT+Ph+Ses+Tf
	D.....5	50.04.0125	1N4448		Fc+ITT+Ph+Ses+Tf
	D.....6	50.04.0125	1N4448		Fc+ITT+Ph+Ses+Tf
	D.....7	50.04.0125	1N4448		Fc+ITT+Ph+Ses+Tf
	D.....8	50.04.0127	BAT 85	BAS 40-02	Ph+Sie
	D.....9	50.04.0127	BAT 85	BAS 40-02	Ph+Sie
	D....10	50.04.0125	1N4448		Fc+ITT+Ph+Ses+Tf
	D....11	50.04.0125	1N4448		Fc+ITT+Ph+Ses+Tf
	D....12	50.04.0125	1N4448		Fc+ITT+Ph+Ses+Tf
	D....13	50.04.0125	1N4448		Fc+ITT+Ph+Ses+Tf
	D....14	50.04.0125	1N4448		Fc+ITT+Ph+Ses+Tf
	D....15	50.04.0125	1N4448		Fc+ITT+Ph+Ses+Tf
	D....16	50.04.0127	BAT 85	BAS 40-02	Ph+Sie
	D....17	50.04.1118	6.2 V, I	BZX83C 6.2, BZX55C 6.2, ZPD 6.2	ITT+Ses
	D....18	50.04.0512	1N5818	1N5819	Mot
	DL..100	50.04.2112	MW5353	CM4-584E, HLMP-3401	CM+GI+HP
	DL..101	50.04.2112	MW5353	CM4-584E, HLMP-3401	CM+GI+HP
	DL..102	50.04.2112	MW5353	CM4-584E, HLMP-3401	CM+GI+HP
	DL..103	50.04.2112	MW5353	CM4-584E, HLMP-3401	CM+GI+HP
	DL..104	50.04.2111	MW5753	CM4-284E, HLMP-3301	CM+GI+HP
	DL..200	50.04.2112	MW5353	CM4-584E, HLMP-3401	CM+GI+HP

S T U D E R (01) 85/03/07 PB REMOTE CONTROL BOARD 1.328.201.81 PAGE 1

IND.	POS.NO.	PART NO.	VALUE	SPECIFICATIONS / EQUIVALENT	MANUF.
	S.....6			See note 2	
	S.....7			See note 2	
	S.....8			See note 2	
	S.....9			See note 2	
	S....10			See note 2	

(01) 85.03.07 Improved compensation of error amplifier.

Note 1 – Contact pin: Studer 54.01.3020, Berg 79 140-102-36
Bridge: Studer 54.01.3021, Philips 2422 024 08003

Note 2 – Switch: Studer 55.03.3261, Rafi 3.13001.110
Extender: Studer 55.03.3262, Rafi 5.55101.690

Ce=Ceramic, El=Electrolytic, Sal=Solid aluminium,
PETP=Polyesterfilm, Pp=Polypropylen.

MANUFACTURER: CM=Chicago Miniatur, Fc=Fairchild,
GI=General Instruments, HP=Hewlett Packard,
ITT=Intermetall, Mot=Motorola,
NS=National Semiconductors, Ph=Philips, Ses=Sescosem,
SG=Silicon General, Sie=Siemens, Sig=Signetics,
St=Studer, Tho=Thomson, TI=Texas Instruments,
Tf=Telefunken.

ORIG 84/10/17 (01) 85/03/07

S T U D E R (01) 85/03/07 PB REMOTE CONTROL BOARD 1.328.201.81 PAGE 4

BLOCK DIAGRAM MP UNIT

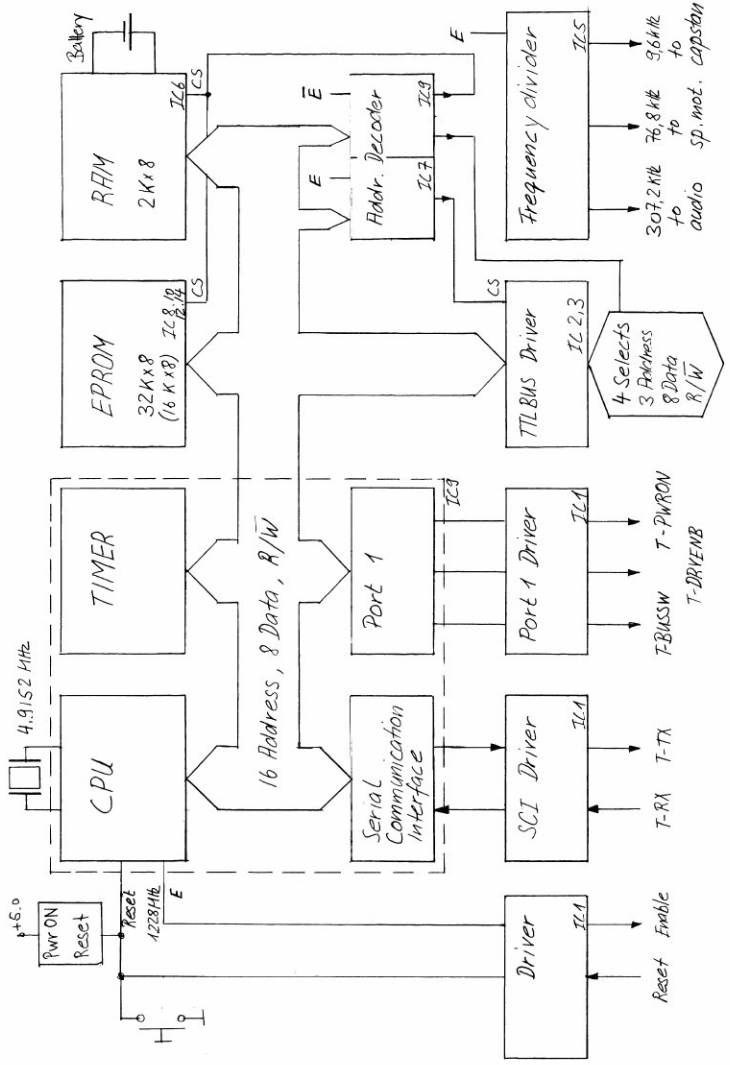

June 83 Ke	A810	Blockdiagram		
STUDER	MP unit		1820,780.00	PAGE 1 OF 8

BLOCK DIAGRAM TAPE DECK CONTROLLER

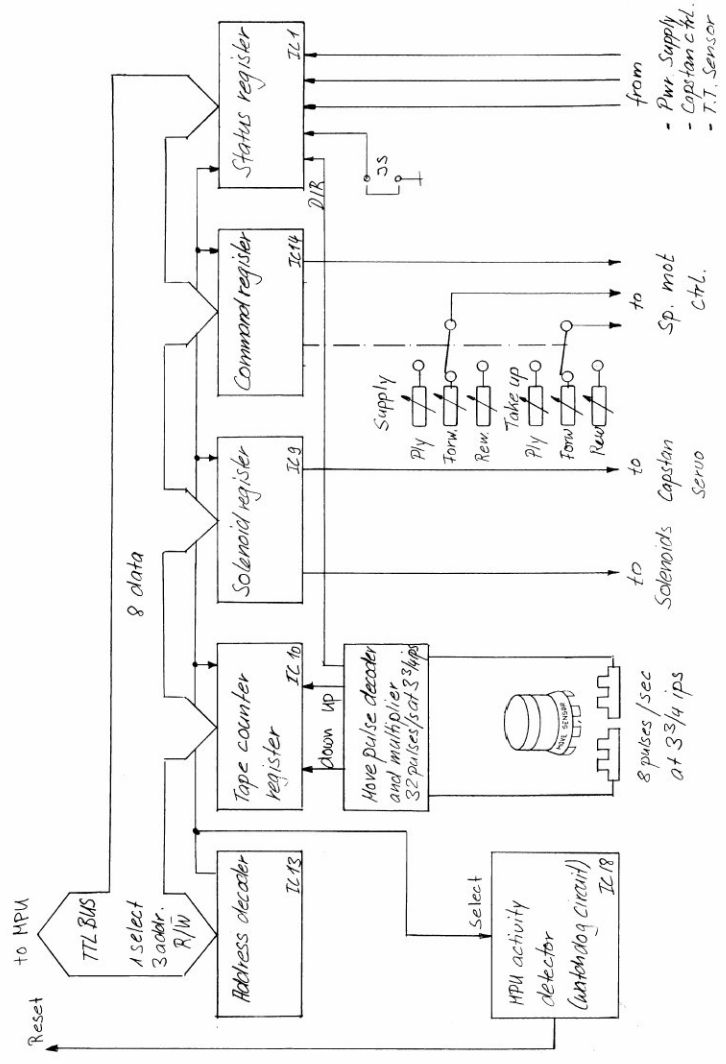

June 83 Ke	A810	Blockdiagram		
STUDER	Tape Deck Controller		181075000	PAGE 1 OF 3

BLOCK DIAGRAM SERIAL REMOTE CONTROLLER

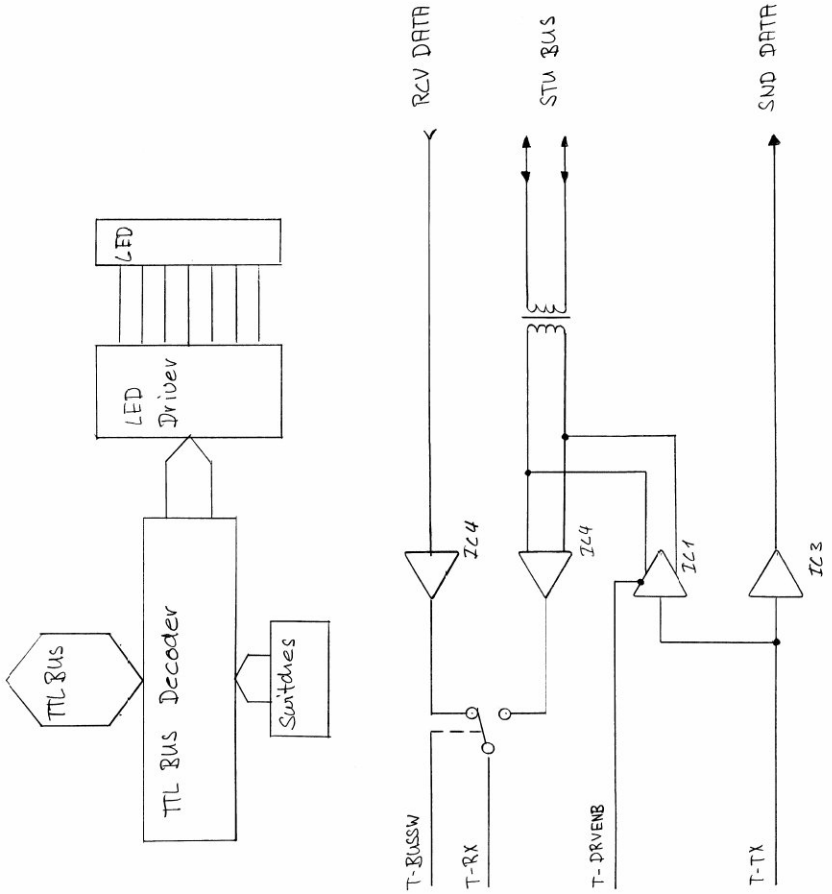

June 83 Ke	A810			
STUDER	SERIAL REMOTE CONTROLLER		181075100	PAGE 1 OF 5

BLOCK DIAGRAM PERIPHERY CONTROLLER

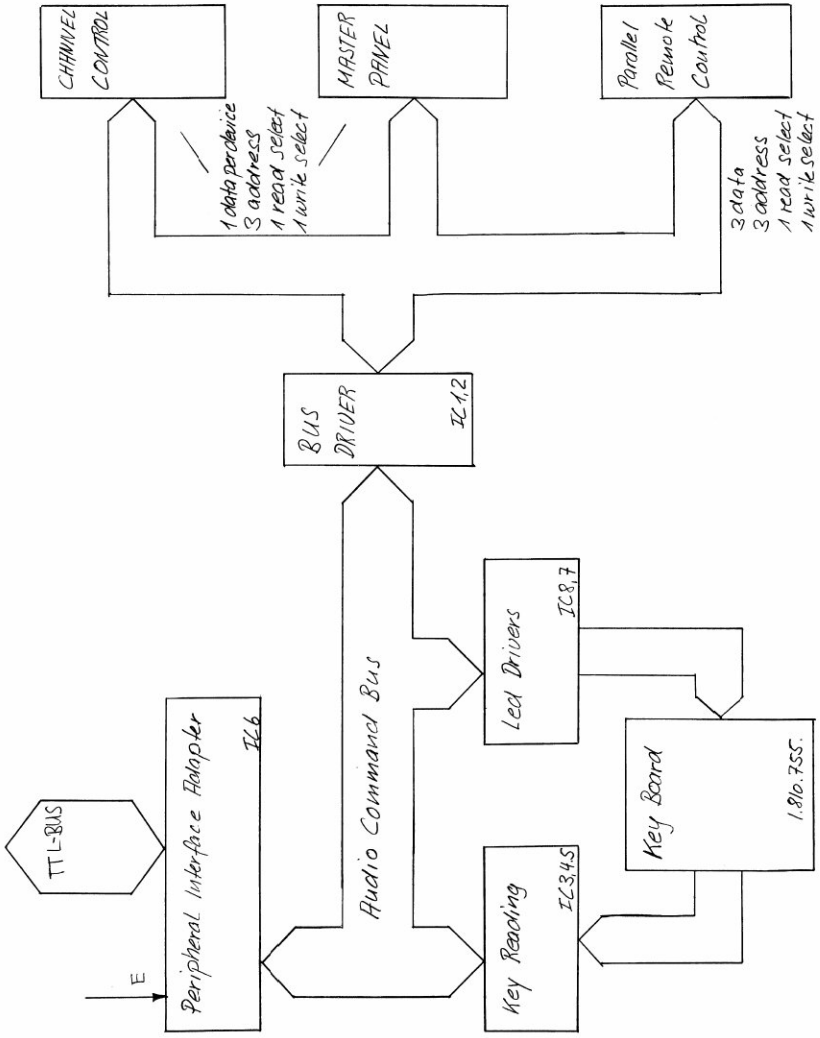

June 83 Ke	A810	Blockdiagram		
STUDER	Periphery Controller		1.810.753.00	PAGE 1 OF 3

BLOCK DIAGRAM CHANNEL CTRL. MASTER PANEL

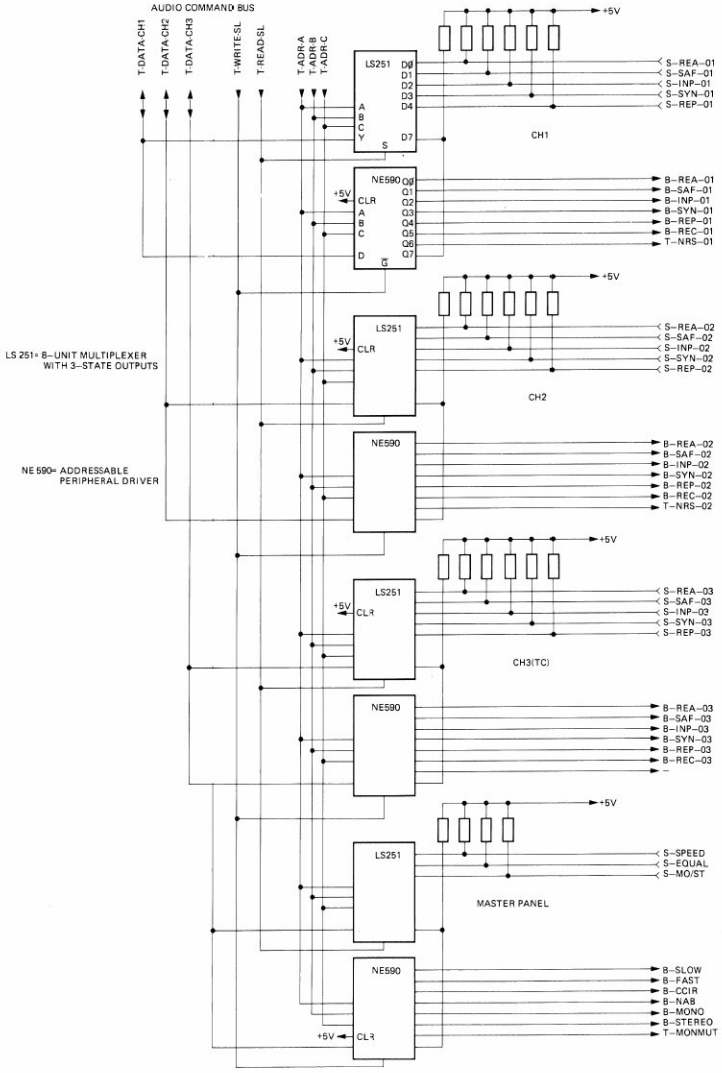

June 83 Ke	A 810	Blockdiagramm		
STUDER	CHANNEL CTRL. MASTER PANEL			PAGE OF

BLOCK DIAGRAM BUS CONVERTER

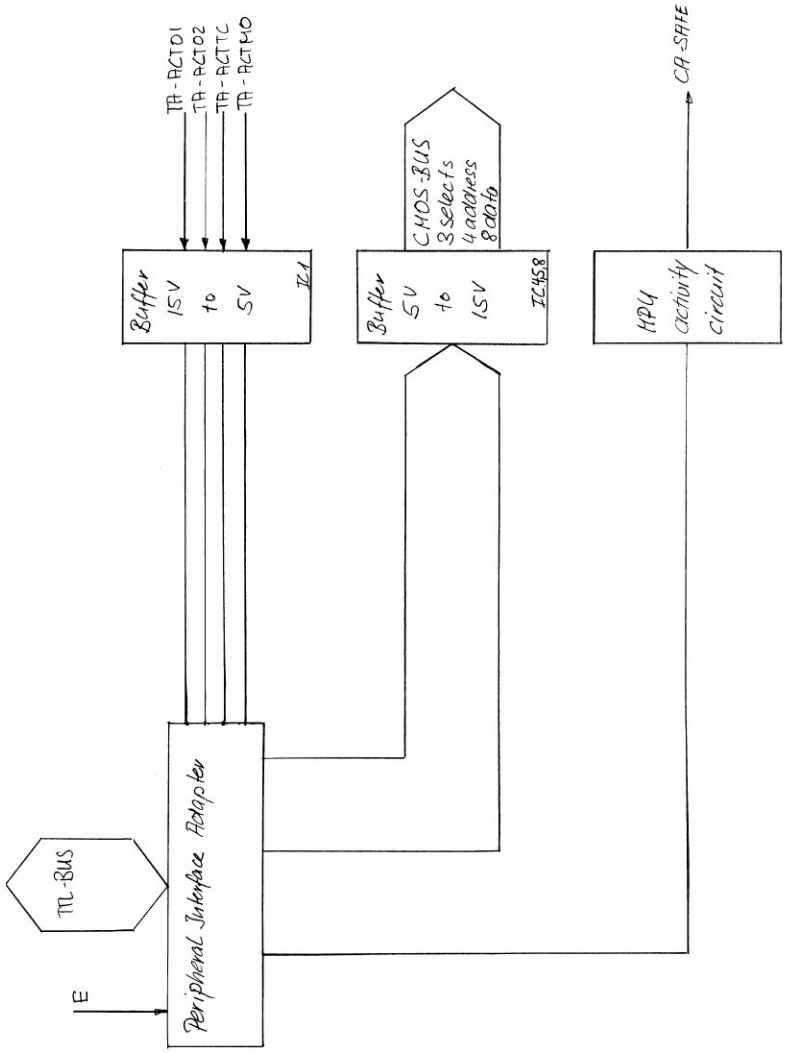

June 83 Ke	A810	Blockdiagram		
STUDER	BUS CONVERTER		1810754.00	PAGE 1 OF 2

BLOCK DIAGRAM BUS CONVERTER (PERIPHERY)

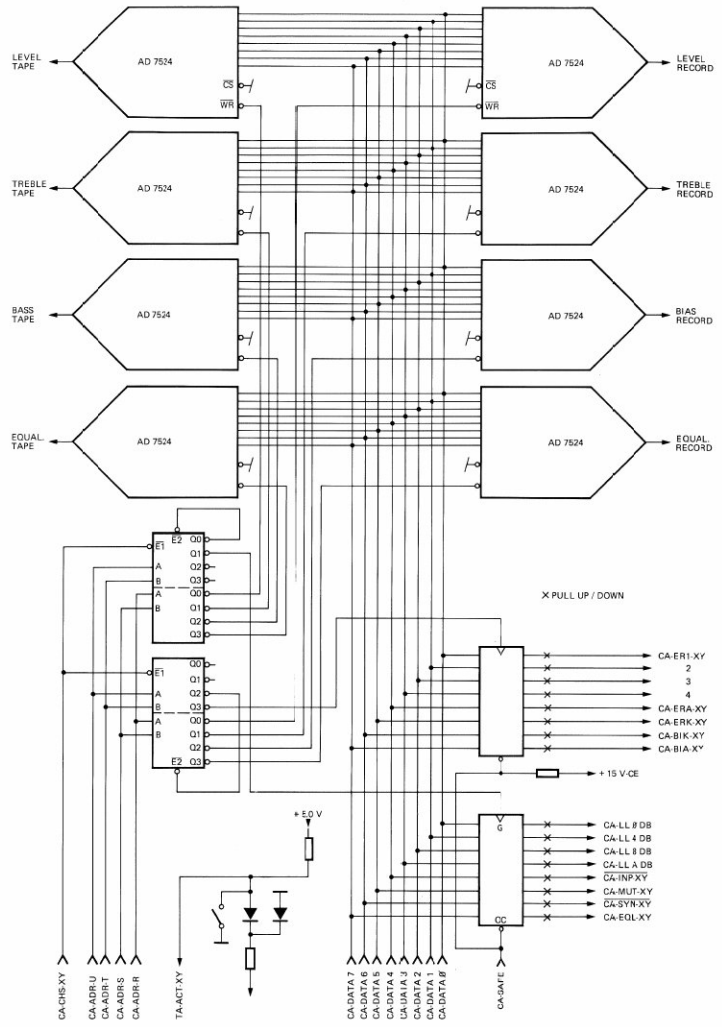

June 83 Ke	A 810	Blochdiagram	
STUDER	BUS CONVERTER (Periphery)		PAGE OF

SECTION 6 TAPE TRANSPORT DIAGRAMS

UNIT		PART NUMBER	GR/EL	PAGE
CAPSTAN MOTOR CONTROL PCB	▲	1.810.761-00	26	6/1
CAPSTAN MOTOR CONTROL PCB	▲	1.810.761-81	26	6/1
CAPSTAN MOTOR CONTROL PCB	▲	1.810.766-00	26	6/3
SPOOLING MOTOR CONTROL PCB	▲	1.810.760-00	24	6/5
- CONNECTION PCB LEFT		1.810.726-00	09	6/5
- CONNECTION PCB RIGHT		1.810.727-00	10	6/5
SPOOLING MOTOR CONTROL PCB	▲	1.810.760-81	24	6/7
- CONNECTION PCB LEFT		1.810.726-00	09	6/7
- CONNECTION PCB RIGHT		1.810.727-00	10	6/7
TAPE TENSION SENSOR PCB LEFT	▲	1.810.730-81/-82	27	6/9
- TAPE END SENSOR PCB		1.810.729-00	27/04	6/9
TAPE TENSION SENSOR PCB RIGHT	▲	1.810.728-81/-82	28	6/11
- TAPE END SENSOR PCB		1.810.729-00	28/06	6/11
TAPE MOVE SENSOR PCB		1.810.731-00	28/05	6/13
VARISPEED CONTROL PCB		1.810.762-00	42	6/15
VARISPEED CONTROL PCB		1.810.762-81	42	6/17
BLOCKDIAGRAM CAPSTAN MOTOR CONTROL				6/19

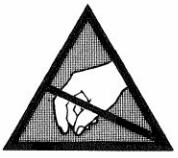

ALL PCBs MARKED WITH THIS SIGN ▲ CONTAIN COMPONENTS SENSITIVE TO STATIC CHARGES.
PLEASE, REFER TO PREFACE BEFORE YOU REMOVE THESE BOARDS.

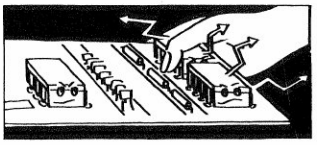

CAPSTAN MOTOR CONTROL PCB 1.810.761–00/–81 GR26 "ESE"

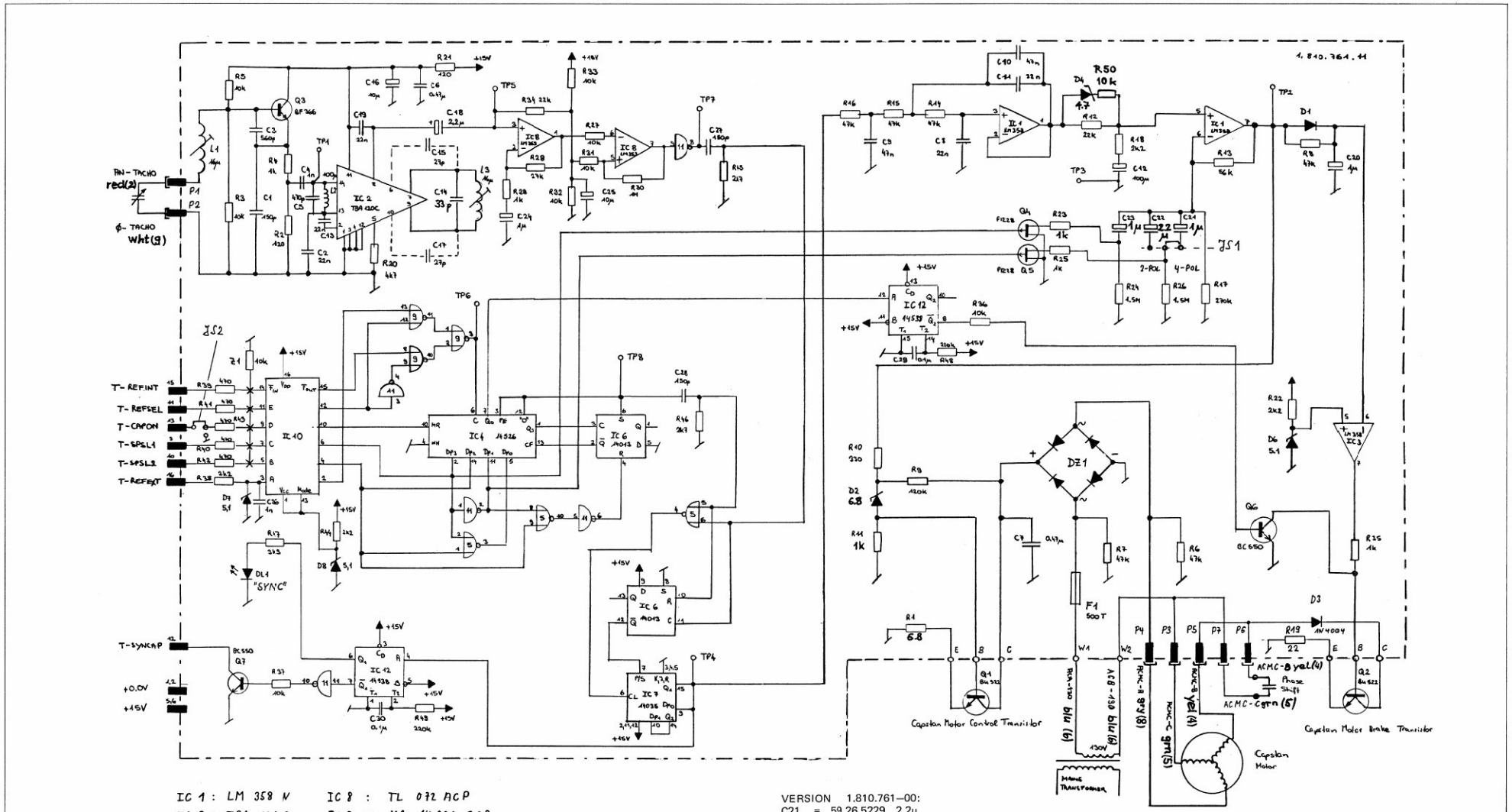

CAPSTAN MOTOR CONTROL PCB 1.810.761–00/–81 GR26 "ESE"

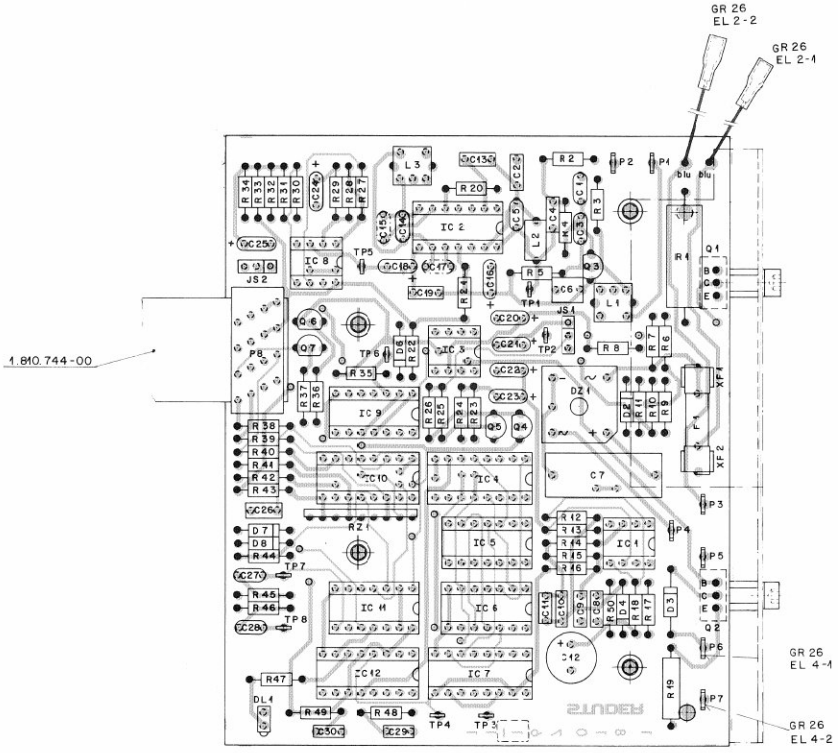

IND.	POS.NO.	PART NO.	VALUE	SPECIFICATIONS / EQUIVALENT	MANUF.
	C..0001	59.34.4151	150 pF	5%, 16V, Ce	
	C..0002	59.06.0223	22 nF	16V	
	C..0003	59.34.5561	560 pF	5%, 16V, Ce	
	C..0004	59.06.2102	1 nF	16V	
	C..0005	59.34.5471	470 pF	5%, 16V, Ce	
	C..0006	59.06.0474	0.47 uF	16V	
	C..0007	59.49.0450	0.47 uF	150V	
	C..0008	59.06.0223	22 nF	10%, 16V	
	C..0009	59.06.0473	47 nF	10%, 16V	
	C..0010	59.06.0473	47 nF	10%, 16V	
	C..0011	59.06.0333	33 nF	10%, 16V	
	C..0012	59.22.5101	100 uF	-10%, 16V, El	
	C..0013	59.06.0223	22 nF	10%, 16V	
	C..0014	59.34.2330	33 pF	5%, 16V, Ce	
	C..0015	59.34.2270		See note 1	
	C..0016	59.26.2100	10 uF	-20%, 16V, El	
	C..0017	59.34.2270		See note 1	
	C..0018	59.26.5229	2.2 uF	-20%, 16V, El	
	C..0019	59.06.0223	22 nF	10%, 16V	
	C..0020	59.26.9109	1.0 uF	-20%, 16V, Sal	Ph
	C..0021	59.26.9109	1.0 uF	-20%, 16V, Sal	Ph
	C..0022	59.26.5229	2.2 uF	-20%, 16V, Sal	Ph
	C..0023	59.26.9109	1.0 uF	-20%, 16V, Sal	Ph
	C..0024	59.26.9109	1.0 uF	-20%, 16V, Sal	Ph
	C..0025	59.26.2100	10 uF	-20%, 16V, Sal	Ph
	C..0026	59.06.2102	1 nF	16V	
	C..0027	59.34.4151	150 pF	16V, Ce	
	C..0028	59.34.4151	150 pF	16V, Ce	
	C..0029	59.06.2104	0.1 uF	16V	
	C..0030	59.06.2104	0.1 uF	16V	
	D..0001		not used		
	D..0002	50.04.1102	6.8 V Z	BZX83C 6.8, BZX55C 6.8, ZPD 6.8	ITT,Ses
	D..0003	50.04.2105	1N4004	1N4005, 1N4006, 1N4007	Mot
	D..0004	50.04.1123	4.7 V Z	BZX83C 4.7, BZX55C 4.7, ZPD 4.7	ITT,Ses
	D..0005		not used		
	D..0006	50.04.1112	5.1 V Z	BZX83C 5.1, BZX55C 5.1, ZPD 5.1	ITT,Ses

IND.	POS.NO.	PART NO.	VALUE	SPECIFICATIONS / EQUIVALENT	MANUF.
	D..0007	50.04.1112	5.1 V Z	BZX83C 5.1, BZX55C 5.1, ZPD 5.1	ITT,Ses
	D..0008	50.04.1112	5.1 V Z	BZX83C 5.1, BZX55C 5.1, ZPD 5.1	ITT,Ses
	DL.0001	50.04.2107	LED, red	Dialco Nr. 555-2007	
	DZ.0001	70.01.C226	Rectifier	150 V, 1 A, see Note 2	GI,Va
	F..0001	51.01.C114	0.5 A	Fuse, slow blow, 5 * 20 mm	
	IC.0001	50.09.0105	NE 5532N	XR 1532N	Mot,NS,TI
	IC.0002	50.11.0107	TBA120C	TBA120S, Q 67000-A490	Mot,Sie
	IC.0003	50.05.0266	LM358N	LM358P	Mot,NS,TI
	IC.0004	50.07.0526	MC145260CP		Fc,Mot
	IC.0005	50.07.0006	MC14001BCP	CD4C18E, CD4001BC, HEF4001BP	Mot,NS,Ph,RCA
	IC.0006	50.07.0013	MC14013BCP	F4013BPC	Fc,Mot
	IC.0007	50.07.0007	MC14035BCP	CD4C35BCN, HEF4035BP	Mot,NS,Ph
	IC.0008	50.04.0101	TL072ACP	LF353N, MC34003P	Mot,NS,TI
	IC.0009	50.07.0006	MC14001BCP	CD4C18E, CD4001BC, HEF4001BP	Mot,NS,Ph,RCA
	IC.0010	50.15.0103	MC3486P	MC1455AB	Mot
	IC.0011	50.07.0014	MC14584BCP	MM74C914N, 4008BPC, HEF40106BP	Fc,Mot,NS,Sig
	IC.0012	50.07.0538	MC145388CP	F45388PC	Fc,Mot
	J..0001	54.14.5021	16 cont.	See note 3	
	JS.0001			See note 4	
	JS.0002			See note 4	
	L..0001	1.022.222.00	16 uH		St
	L..0002	62.02.4101	100 uH	TOK Nr. EL 0810 SK-101 K	
	L..0003	1.022.222.00	16 uH		St
	P..0001	54.02.0320			
	P..0002	54.02.0320			
	P..0003	54.02.0320			
	P..0004	54.02.0320			
	P..0005	54.02.0320			
	P..0006	54.02.0320			

IND.	POS.NO.	PART NO.	VALUE	SPECIFICATIONS / EQUIVALENT	MANUF.
	P..0007	54.02.0320			
	Q..0001	50.03.0520	BU522		Mot
	Q..0002	50.03.0520	BU522		Mot
	Q..0003	50.03.0514	BF366		Mot
	Q..0004	50.03.0329	P1228E	WP146	TS,Sx
	Q..0005	50.03.0329	P1228E	WP146	TS,Sx
	Q..0006	50.03.0497	BC550E		Sie
	Q..0007	50.03.0497	BC550E		Sie
	R..0001	57.56.1689	6.8 Ohm	10%, 4 W	
	R..0002	57.11.4121	120 Ohm	5%	
	R..0003	57.11.4103	10 kOhm	5%	
	R..0004	57.11.4102	1 kOhm	5%	
	R..0005	57.11.4103	10 kOhm	5%	
	R..0006	57.11.4473	47 kOhm	5%	
	R..0007	57.11.4473	47 kOhm	5%	
	R..0008	57.11.4473	47 kOhm	5%	
	R..0009	57.11.4124	120 kOhm	5%	
	R..0010	57.11.4331	330 Ohm	5%	
	R..0011	57.11.4102	1 kOhm	5%	
	R..0012	57.11.4223	22 kOhm	2%	
	R..0013	57.11.4563	56 kOhm	2%	
	R..0014	57.11.4473	47 kOhm	2%	
	R..0015	57.11.4473	47 kOhm	2%	
	R..0016	57.11.4473	47 kOhm	2%	
	R..0017	57.11.4274	270 kOhm	5%	
	R..0018	57.11.4222	2.2 kOhm	2%	
	R..0019	57.13.4220	22 Ohm	5%, 0.3 W	
	R..0020	57.11.4472	4.7 kOhm	5%	
	R..0021	57.11.4121	120 Ohm	5%	
	R..0022	57.11.4222	2.2 kOhm	5%	
	R..0023	57.11.4102	1 kOhm	2%	
	R..0024	57.11.5155	1.5 MOhm	5%	
	R..0025	57.11.4102	1 kOhm	2%	
	R..0026	57.11.5155	1.5 MOhm	5%	
	R..0027	57.11.4103	10 kOhm	5%	

IND.	POS.NO.	PART NO.	VALUE	SPECIFICATIONS / EQUIVALENT	MANUF.
	R..0028	57.11.4273	27 kOhm	5%	
	R..0029	57.11.4102	1 kOhm	5%	
	R..0030	57.11.4105	1 MOhm	5%	
	R..0031	57.11.4103	10 kOhm	5%	
	R..0032	57.11.4103	10 kOhm	5%	
	R..0033	57.11.4103	10 kOhm	5%	
	R..0034	57.11.4223	22 kOhm	5%	
	R..0035	57.11.4102	1 kOhm	5%	
	R..0036	57.11.4103	10 kOhm	5%	
	R..0037	57.11.4103	10 kOhm	5%	
	R..0038	57.11.4222	2.2 kOhm	5%	
	R..0039	57.11.4471	470 Ohm	5%	
	R..0040	57.11.4471	470 Ohm	5%	
	R..0041	57.11.4471	470 Ohm	5%	
	R..0042	57.11.4471	470 Ohm	5%	
	R..0043	57.11.4471	470 Ohm	5%	
	R..0044	57.11.4222	2.2 kOhm	5%	
	R..0045	57.11.4272	2.7 kOhm	5%	
	R..0046	57.11.4272	2.7 kOhm	5%	
	R..0047	57.11.4332	3.3 kOhm	5%	
	R..0048	57.11.4224	220 kOhm	5%	
	R..0049	57.11.4224	220 kOhm	5%	
	R..0050	57.11.4103	10 kOhm	5%	
	RZ.0001	1.010.014.57		Network 8 * 10 kOhm, 10%	

IND.	POS.NO.	PART NO.	VALUE	SPECIFICATIONS / EQUIVALENT	MANUF.

Note 1 - C15,C17 (27pF)
Only used in connection with TBA 120
Note 2 - Rectifier
General Instruments Nr. KBPC 104
Varo Nr. VS 448, VS447
Note 3 - Yamaichi Nr. FAS-16-17, Burndy Nr. FRS-16 30-4P
Connection cable Studer Nr. 1.810.744.00
Note 4 - Contact pins Studer 54.01.0820, Berg 75 160-102-34
Bridge: Studer 54.01.0921, Philips 2422 024 88003

Ce=Ceramic, El=Electrolytic, Sal=Solid Aluminium

MANUFACTURER: Fc=Fairchild, GI=General Instruments, ITT=Intersetall,
Mot=Motorola, NS=National Semiconductors, Ph=Philips,
RCA=Radio Corp. of America, Ses=Sescosem, Sie=Siemens,
Sig=Signetics, St=Studer, Sx=Siliconix,
TI=Texas Instruments, TS=Teledyne Semiconductors,
Va=Varo

ORIG 82/12/21

CAPSTAN MOTOR CONTROL PCB 1.810.766–00 GR26 "ESE"

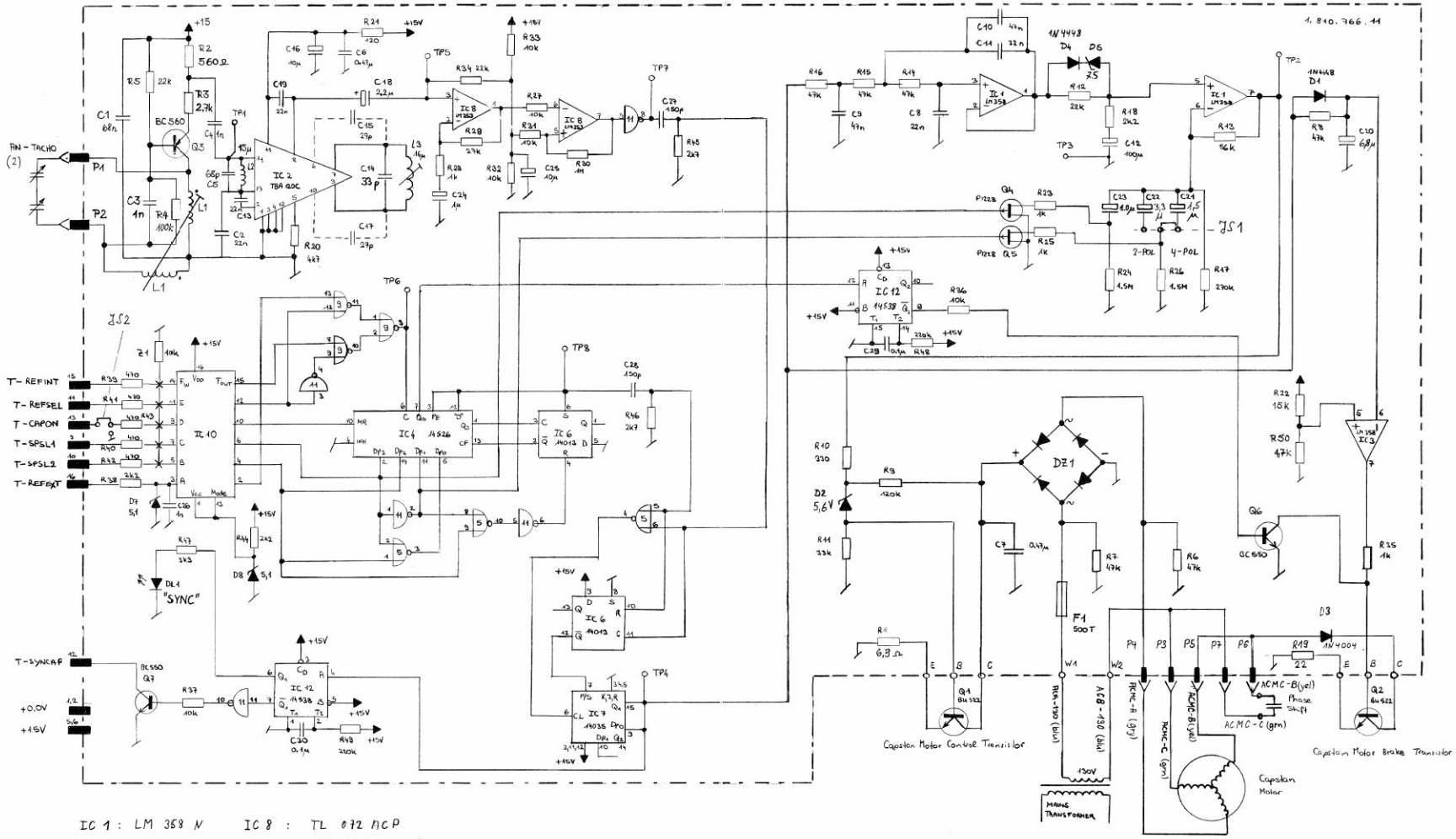

IC 1 : LM 358 N
IC 2 : TBA 120 C
IC 3 : LM 358 N
IC 4 : 4526 BPC
IC 5 : MC 14 001
IC 6 : MC 14 013
IC 7 : MC 14 035
IC 8 : TL 072 ACP
IC 9 : MC 14 001 BCP
IC 10 : MC 14 504 B
IC 11 : 40 114 BCB / MC 14 584 BCP
IC 12 : MC 14 538 BCP

CAPSTAN MOTOR CONTROL PCB 1.810.766–00 GR26 "ESE"

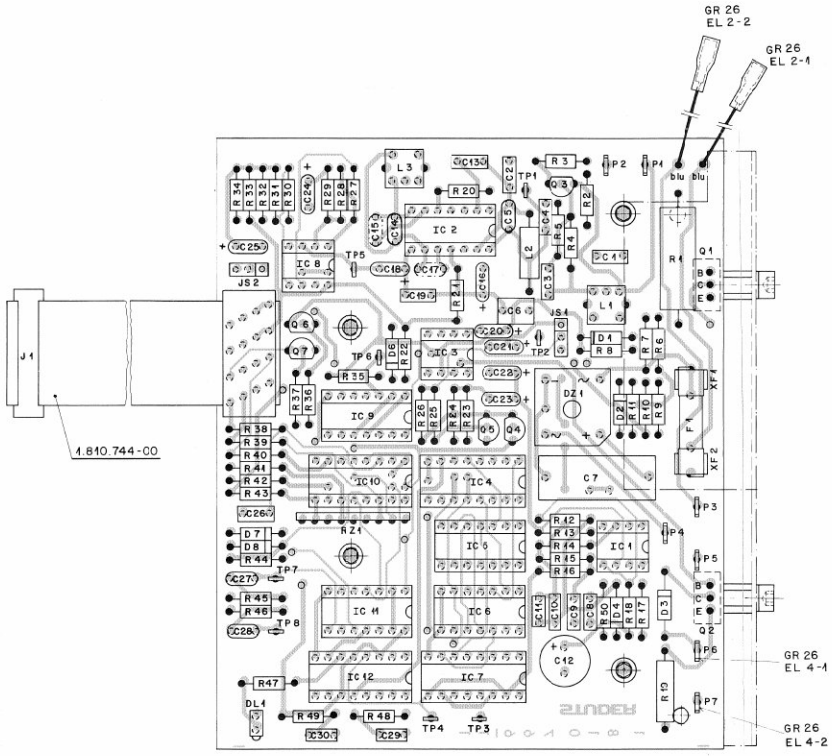

IND.	POS.NO.	PART NO.	VALUE	SPECIFICATIONS / EQUIVALENT	MANUF.
	C.0001	59.99.3205	68 nF	-20%, 16V, Ce	
	C.0002	59.06.0223	22 nF	16V	
	C.0003	59.06.0102	1 nF		
	C.0004	59.06.0102	1 nF		
	C.0005	59.34.4681	68 pF	5%, 16V, Ce	
	C.0006	59.06.0476	.47 uF	16V	
	C.0007	59.99.0450	.47 uF	150V	
	C.0008	59.06.0223	22 nF	10%, 16V	
	C.0009	59.06.0473	47 nF	10%, 16V	
	C.0010	59.06.0473	47 nF	10%, 16V	
	C.0011	59.06.0333	33 nF	10%, 16V	
	C.0012	59.22.5101	100 uF	-10%, 16V, El	
	C.0013	59.06.0223	22 nF	10%, 16V	
	C.0014	59.34.2330	33 pF	5%, 16V, Ce	
	C.0015	59.34.2270		See note 1	
	C.0016	59.26.2100	10 uF	-20%, 16V, El	
	C.0017	59.34.2270		See note 1	
	C.0018	59.26.2229	2.2 uF	-20%, 16V, El	
	C.0019	59.06.0223	22 nF	10%, 16V	
(03)	C.0020	59.26.3689	6.8 uF	-20%, 16V, Sal	Ph
(01)	C.0021	59.26.5229	2.2 uF	-20%, 16V, Sal	Ph
(01)	C.0021	59.26.5159	1.5 uF	-20%, 16V, Sal	Ph
(03)	C.0022	59.26.4479	4.7 uF	-20%, 16V, Sal	
(01)	C.0022	59.26.2339	3.3 uF	-20%, 16V, Sal	
	C.0023	59.26.4109	1.0 uF	-20%, 16V, Sal	Ph
	C.0024	59.26.4109	1.0 uF	-20%, 16V, Sal	Ph
	C.0025	59.26.2100	10 uF	-20%, 16V, Sal	
	C.0026	59.06.0102	1 nF	16V	
	C.0027	59.34.4151	150 pF	16V, Ce	
	C.0028	59.34.4151	150 pF	16V, Ce	
	C.0029	59.06.0104	0.1 uF	16V	
	C.0030	59.06.0474	0.47uF	16V	
	D.0001	50.04.0125	1N4448		ITT,Ph,Sns,TI
	D.0002	50.04.1108	5.6 V Z	BZX83C 5.6, BZX55C 5.6, ZPD 5.6	ITT,Ses
	D.0003	50.04.0105	1N4004	1N4005, 1N4006, 1N4007	Mot
	D.0004	50.04.0125	1N4448		ITT,Ph,Sns,TI

IND.	POS.NO.	PART NO.	VALUE	SPECIFICATIONS / EQUIVALENT	MANUF.
	D.0005	50.04.1103	7.5 V Z	BZX83C 7.5, BZX55C 7.5, ZPD 7.5	ITT,Ses
	D.0006		not used		
	D.0007	50.04.1117	5.1 V Z	BZX83C 5.1, BZX55C 5.1, ZPD 5.1	ITT,Ses
	D.0008	50.04.1117	5.1 V Z	BZX83C 5.1, BZX55C 5.1, ZPD 5.1	ITT,Ses
	DL.0001	50.94.2107	LED, red	Dialco Nr. 555-2007	
	G7.0001	79.01.0226	Rectifier	150 V, 1 A, see Note 2	GI,Va
	F.0001	51.01.0114	0.5 A	Fuse, slow blow, 5 * 20 mm	
	IC.0001	50.09.0105	NE553N	XR553N	Sig,Exar
	IC.0032	50.11.0107	TDA1208	TDA1208, 2 67000-A490	Mot,Sie
	IC.0033	50.05.0286	LM358N	LM358P	Mot,NS,TI
	IC.0034	50.07.0526	MC14528BCP		Fc,Mot
	IC.0035	50.07.0005	MC14001BCP	CD4011BE, CD4011BC, HEF4011BP	Mot,NS,Ph,RCA
	IC.0036	50.07.0013	MC14013BCP	F4C13BPC	Fc,Mot
	IC.0037	50.07.0007	MC14035BCP	CD4035BCN, HEF4035BP	Mot,NS,Ph
	IC.0038	50.09.0101	TL072ACP	LF353N, MC3403P	Mot,NS,TI
	IC.0039	50.07.0005	MC14001BCP	CD4011BE, CD4011BC, HEF4011BP	Mot,NS,Ph,RCA
	IC.0040	50.15.0103	MC3446P	MC3446P	Mot
	IC.0041	50.07.0014	MC14516BCP	MM74C914N, 4208PC, HEF4516BP	Fc,Mot,NS,Sig
	IC.0042	50.07.0538	MC14538BCP	F4538BPC	Fc,Mot
	J.0001	54.14.5021	15 cont.	See note 1	
	JS.0001			See note 4	
	JS.0002			See note 4	
	L.0001	1.072.234.07	2410.4 u	H	St
	L.0002	82.02.2126	15 um	Helwan Ind. Corpor.	
	L.0003	1.072.225.00	16 um		St
	P.0001	54.02.3320			
	P.0002	54.02.3320			
	P.0003	54.02.3320			
	P.0004	54.02.3320			

IND.	POS.NO.	PART NO.	VALUE	SPECIFICATIONS / EQUIVALENT	MANUF.
	P.0005	54.02.3320			
	P.0006	54.02.3320			
	P.0007	54.02.3320			
	Q.0001	50.03.0520	BU522		Mot
	Q.0002	50.03.0520	BU522		Mot
	Q.0003	50.03.0496	BC560		Sie
	Q.0004	50.03.0329	PLZ28E	xPlus	TS,Sx
	Q.0005	50.03.0329	PLZ28E	xPlus	TS,Sx
	Q.0006	50.03.0497	BC550C		Sie
	Q.0007	50.03.0497	BC550C		Sie
	R.0001	57.06.3689	6.8 Ohm	10%, 4 W	
	R.0002	57.11.5561	560 Ohm	2%	
	R.0003	57.11.5272	2.7 kOhm	2%	
	R.0004	57.11.5104	100 kOhm	5%	
	R.0005	57.11.5223	22 kOhm	5%	
	R.0006	57.11.5473	47 kOhm	5%	
	R.0007	57.11.5473	47 kOhm	5%	
	R.0008	57.11.5473	47 kOhm	5%	
	R.0009	57.11.5124	120 kOhm	5%	
	R.0010	57.11.5331	330 Ohm	5%	
	R.0011	57.11.5333	33 kOhm	5%	
	R.0012	57.11.5223	22 kOhm	2%	
	R.0013	57.11.5563	56 kOhm	2%	
	R.0014	57.11.5473	47 kOhm	2%	
	R.0015	57.11.5473	47 kOhm	2%	
	R.0016	57.11.5473	47 kOhm	2%	
	R.0017	57.11.5274	270 kOhm	5%	
	R.0018	57.11.5227	2.2 kOhm	2%	
	R.0019	57.11.5220	22 Ohm	5%, 0.1 W	
	R.0020	57.11.5472	4.7 kOhm	5%	
	R.0021	57.11.5121	120 Ohm	5%	
	R.0022	57.11.5153	15 kOhm	2%	
	R.0023	57.11.5102	1 kOhm	2%	
	R.0024	57.11.5154	1.5 MOhm	5%	
	R.0025	57.11.5102	1 kOhm	2%	

IND.	POS.NO.	PART NO.	VALUE	SPECIFICATIONS / EQUIVALENT	MANUF.
	R.0026	57.11.5155	1.5 MOhm	5%	
	R.0027	57.11.5103	10 kOhm	5%	
	R.0028	57.11.5273	27 kOhm	5%	
	R.0029	57.11.5102	1 kOhm	5%	
	R.0030	57.11.5105	1 MOhm	5%	
	R.0031	57.11.5103	10 kOhm	5%	
	R.0032	57.11.5103	10 kOhm	5%	
	R.0033	57.11.5103	10 kOhm	5%	
	R.0034	57.11.5223	22 kOhm	5%	
	R.0035	57.11.5102	1 kOhm	5%	
	R.0036	57.11.5103	10 kOhm	5%	
	R.0037	57.11.5103	10 kOhm	5%	
	R.0038	57.11.5222	2.2 kOhm	5%	
	R.0039	57.11.5471	470 Ohm	5%	
	R.0040	57.11.5471	470 Ohm	5%	
	R.0041	57.11.5471	470 Ohm	5%	
	R.0042	57.11.5471	470 Ohm	5%	
	R.0043	57.11.5471	470 Ohm	5%	
	R.0044	57.11.5222	2.2 kOhm	5%	
	R.0045	57.11.5272	2.7 kOhm	5%	
	R.0046	57.11.5272	2.7 kOhm	5%	
	R.0047	57.11.5332	3.3 kOhm	5%	
	R.0048	57.11.5224	220 kOhm	5%	
	R.0049	57.11.5224	220 kOhm	5%	
	R.0050	57.11.5472	4.7 kOhm	2%	
	RZ.0001	1.810.014.57		Network 8 * 10 kOhm, 101	

(01) 83.04.08 improved stability behaviour at 7.5 ips and 3.75 ips for 2- and 4-poles motors.

Note 1 - L15,C17 (27pF)
Only used in connection with TDA 120

Note 2 - Rectifier
General Instruments Nr. KBPC 104
Varo Nr. VS 449, VS447

Note 3 - Yamaichi Nr. FAS-16-17, Burndy Nr. FRS-16 BE-4P
Connection cable Studer Nr. 1.810.744.00

Note 4 - Contact pin: Studer 54.01.0021, Berg 75 360-102-36
Bright Studer 54.01.0021, Philips 2422 024 16003

Co=Ceramic, El=Electrolytic, Sal=Solid Aluminum

MANUFACTURER: Fc=Fairchild, GI=General Instruments, ITT=Intermetall,
Mot=Motorola, NS=National Semiconductors, Ph=Philips,
RCA=Radio Corp. of America, Ses=Sescosem, Sie=Siemens,
Sig=Signetics, St=Studer, Sx=Siliconix,
Ti=Texas Instruments, TS=Teledyne Semiconductors,
Va=Varo

DATE 82/12/01 (01) 83/04/08

CAPSTAN MOTOR CONTROL 1.810.766.81

R
C

R
C

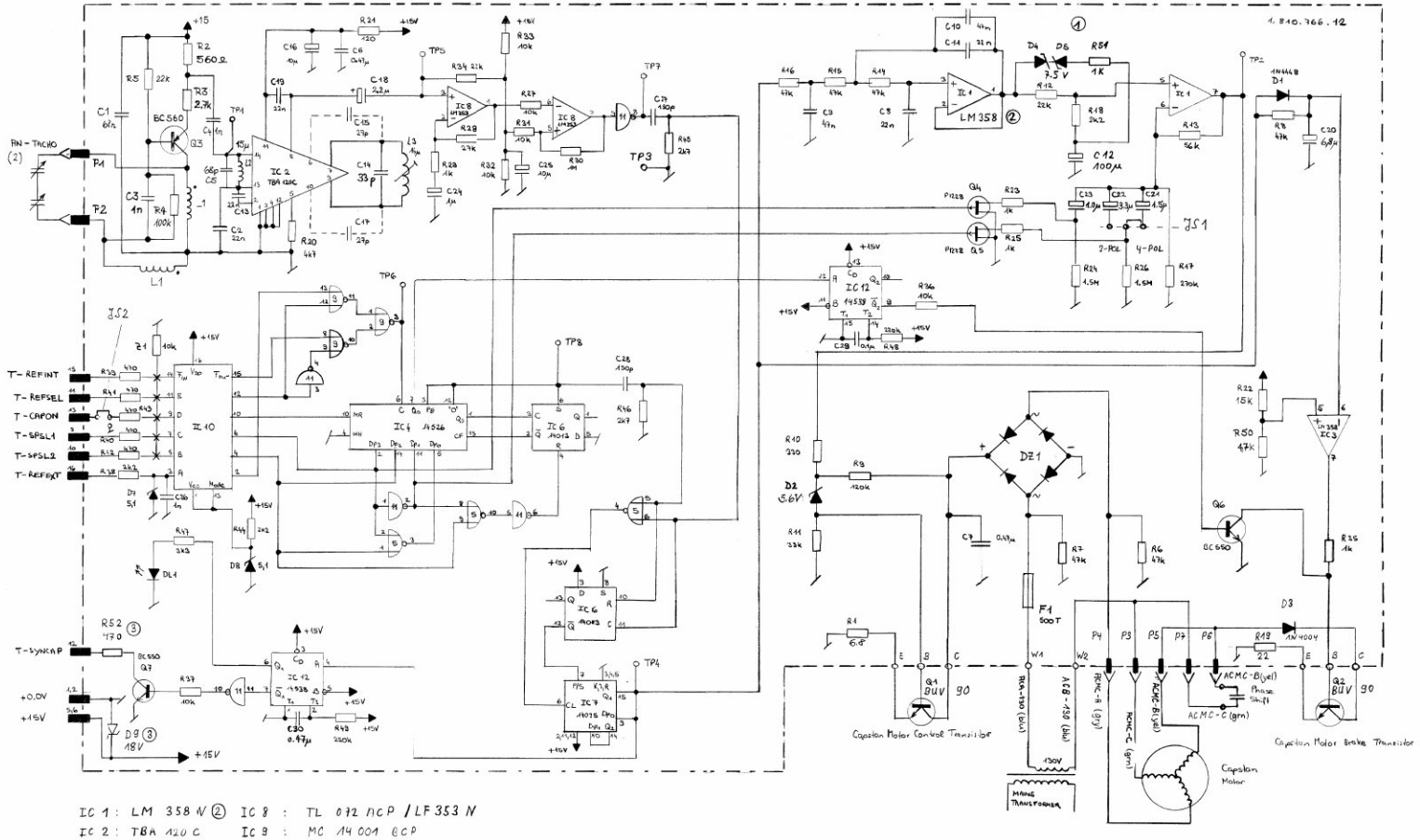

IC 1 : LM 358 N ②
IC 2 : TBA 120 C
IC 3 : LM 358 N
IC 4 : 4526 BPC
IC 5 : MC 14 001
IC 6 : MC 14 013
IC 7 : MC 14 035
IC 8 : TL 072 NCP / LF 353 N
IC 9 : MC 14 001 BCP
IC 10 : MC 14 504 B
IC 11 : 40 014 BCB / MC 14584 BCP
IC 12 : MC 14 538 BCP

2	26.6.89 A.St	3	30. 8. 89 A.St			
0	12.1.88 A.St	1	20. 12. 88 A.St	A 810 Tape Deck Control		
STUDER	Capstan Motor Control			SC	1.810.766-81	PAGE 1 OF 1

CAPSTAN MOTOR CONTROL 1.820.766.81

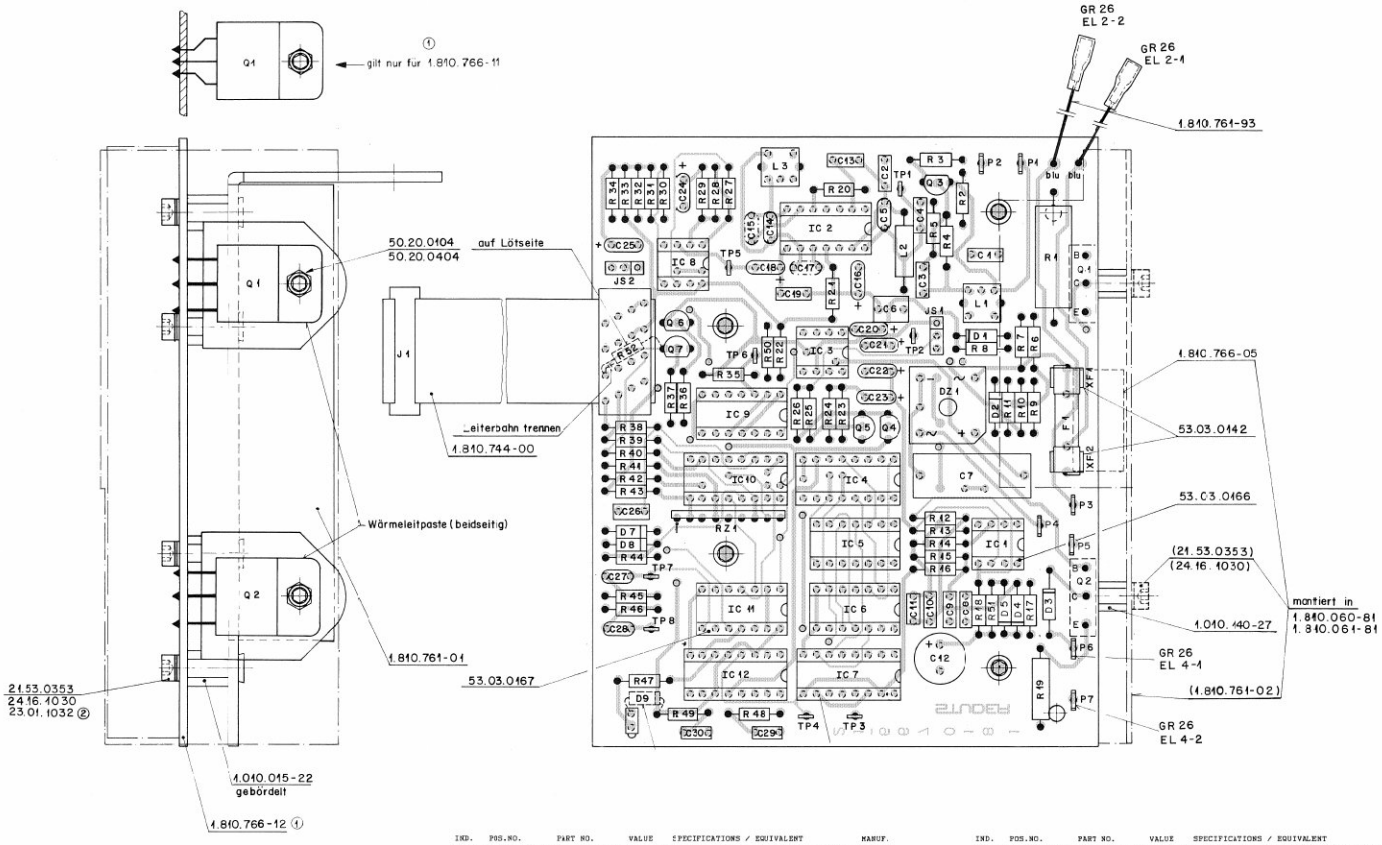

IND.	POS.NO.	PART NO.	VALUE	SPECIFICATIONS / EQUIVALENT	MANUF.
	C....1	59.99.0205	68 nF	-20%, 16V, Ce	
	C....2	59.06.0223	22 nF	16V	
	C....3	59.06.0102	1 nF		
	C....4	59.06.0102	1 nF		
	C....5	59.34.4680	68 pF	5%, 16V, Ce	
	C....6	59.06.0474	470 nF	16V	
	C....7	59.99.0450	470 nF	150V	
	C....8	59.06.0223	22 nF	10%, 16V	
	C....9	59.06.0473	47 nF	10%, 16V	
	C....10	59.06.0473	47 nF	10%, 16V	
	C....11	59.06.0333	33 nF	10%, 16V	
	C....12	59.22.5101	100 uF	-10%, 16V, El	
	C....13	59.06.0223	22 nF	10%, 16V	
	C....14	59.34.2330	33 pF	5%, 16V, Ce	
	C....15	59.34.2270		See note 1	
	C....16	59.26.2100	10 uF	-20%, 16V, El	
	C....17	59.34.2270		See note 1	
	C....18	59.26.5229	2.2 uF	-20%, 16V, El	
	C....19	59.06.0223	22 nF	10%, 16V	
(00)	C....20	59.26.5689	6.8 uF	-20%, 16V, Sal	Ph
(02)	C....20	59.26.2689	6.8 uF	-20%, 16V, Sal	Ph
	C....21	59.26.5159	1.5 uF	-20%, 16V, Sal	Ph
	C....22	59.26.2339	3.3 uF	-20%, 16V, Sal	
	C....23	59.26.9109	1.0 uF	-20%, 16V, Sal	Ph
	C....24	59.26.9109	1.0 uF	-20%, 16V, Sal	Ph
	C....25	59.26.2100	10 uF	-20%, 16V, Sal	
	C....26	59.06.0102	1 nF	16V	
	C....27	59.34.4151	150 pF	16V, Ce	
	C....28	59.34.4151	150 pF	16V, Ce	
	C....29	59.06.0104	100 nF	16V	
	C....30	59.06.0474	470 nF	16V	
	D.....1	50.04.0125	1N4448		ITT,Ph,Sse,TI
	D.....2	50.04.1108	5.6 V Z	BZX 55-C5V6	ITT,Mot,Ph,Tf,SGS,Tho
	D.....3	50.04.0105	1N4004	1N4003, 1N4006, 1N4207	Mot
(03)	D.....4	50.04.0125	1N4448		ITT,Ph,Sse,TI
(01)	D.....4	50.04.1103	7.5 V Z	BZX 55-C7V5	ITT,Mot,Ph,Tf,SGS,Tho

IND.	POS.NO.	PART NO.	VALUE	SPECIFICATIONS / EQUIVALENT	MANUF.
	D.....5	50.04.1103	7.5 V Z	BZX 55-C7V5	ITT,Mot,Ph,Tf,SGS,Tho
	D.....6		not used		
	D.....7	50.04.1112	5.1 V Z	BZX 55-C5V1	ITT,Mot,Ph,Tf,SGS,Tho
	D.....8	50.04.1112	5.1 V Z	BZX 55-C5V1	ITT,Mot,Ph,Tf,SGS,Tho
(03)	D.....9	50.04.1222	18 V Z	BZX 85-C18	
	DL....1	50.04.2107	LED, red	Dialco Nr. 555-2007	
	DZ....1	70.01.0226	Rectifier	150 V, 1 A, see Note 2	GI,Va
	F.....1	51.01.0114	0.5 A	Fuse, slow blow, 5 * 20 mm	
(00)	IC....1	50.09.0101	LF 353 N	TL 072 CP	NS,TI
(02)	IC....1	50.05.0286	LM 358 N	LM 358 P	MOT,NS,TI
	IC....2	50.11.0107	TBA120C	TBA120S, Q 67000-A490	Mot,Sie
	IC....3	50.05.0286	LM358N	LM358P	Mot,NS,TI
	IC....4	50.07.0526	MC14526BCP		Fc,Mot
	IC....5	50.07.0006	MC14001BCP	CD401BE, CD401BC, HEF4001BP	Mot,NS,Ph,RCA
	IC....6	50.07.0013	MC14013BCP	F4C13BPC	Fc,Mot
	IC....7	50.07.0007	MC14035BCP	CD4035BCS, HEF4035BP	Mot,NS,Ph
	IC....8	50.09.0101	TL072ACP	LF353N, NE3403P	Mot,NS,TI
	IC....9	50.07.0006	MC14001BCP	CD401BE, CD401BC, HEF4001BP	Mot,NS,Ph,RCA
	IC....10	50.15.0103	MC3486P	MC14504B	Mot
	IC....11	50.07.0014	MC14584BCP	MM74C914N, 4008BPC, HEF4510BP	Fc,Mot,NS,Sig
	IC....12	50.07.0538	MC14538BCP	F4538BPC	Fc,Mot
	J.....1	54.14.5021	16 cont.	See note 3	
	JS....1			See note 4	
	JS....2			See note 4	
	L.....1	1.022.234.00	2*10.4 u H		St
	L.....2	62.01.0126	15 uH	Delevan El. Corpor.	
	L.....3	1.022.222.00	16 uH		St
	P.....1	54.02.0320			
	P.....2	54.02.0320			

IND.	POS.NO.	PART NO.	VALUE	SPECIFICATIONS / EQUIVALENT	MANUF.
	P.....3	54.02.0320			
	P.....4	54.02.0320			
	P.....5	54.02.0320			
	P.....6	54.02.0320			
	P.....7	54.02.0320			
	Q.....1	50.03.0900	BUY 90		Ph
	Q.....2	50.03.0900	BUY 90		Ph
	Q.....3	50.03.0496	BC560		Sie
	Q.....4	50.03.0329	P122BE	WP146	TS,Sx
	Q.....5	50.03.0329	P122BE	WP146	TS,Sx
	Q.....6	50.03.0497	BC550E		Sie
	Q.....7	50.03.0497	BC550E		Sie
	R.....1	57.56.5689	6.8 Ohm	10%, 4 W	
	R.....2	57.11.3561	560 Ohm	2%	
	R.....3	57.11.3272	2.7 kOhm	2%	
	R.....4	57.11.3104	100 kOhm	5%	
	R.....5	57.11.3223	22 kOhm	5%	
	R.....6	57.11.3473	47 kOhm	5%	
	R.....7	57.11.3473	47 kOhm	5%	
	R.....8	57.11.3473	47 kOhm	5%	
	R.....9	57.11.3124	120 kOhm	5%	
	R....10	57.11.3331	330 Ohm	5%	
	R....11	57.11.3333	33 kOhm	5%	
	R....12	57.11.3223	22 kOhm	2%	
	R....13	57.11.3563	56 kOhm	2%	
	R....14	57.11.3473	47 kOhm	2%	
	R....15	57.11.3473	47 kOhm	2%	
	R....16	57.11.3473	47 kOhm	2%	
	R....17	57.11.3274	270 kOhm	5%	
	R....18	57.11.3222	2.2 kOhm	2%	
	R....19	57.13.4220	22 Ohm	5%, 0.3 W	
	R....20	57.11.3472	4.7 kOhm	5%	
	R....21	57.11.3121	120 Ohm	5%	
	R....22	57.11.3153	15 kOhm	2%	
	R....23	57.11.3102	1 kOhm	2%	

IND.	POS.NO.	PART NO.	VALUE	SPECIFICATIONS / EQUIVALENT	MANUF.
	R....24	57.11.5155	1.5 MOhm	5%	
	R....25	57.11.3102	1 kOhm	2%	
	R....26	57.11.5155	1.5 MOhm	5%	
	R....27	57.11.3103	10 kOhm	5%	
	R....28	57.11.3273	27 kOhm	5%	
	R....29	57.11.3102	1 kOhm	5%	
	R....30	57.11.3105	1 MOhm	5%	
	R....31	57.11.3103	10 kOhm	5%	
	R....32	57.11.3103	10 kOhm	5%	
	R....33	57.11.3103	10 kOhm	5%	
	R....34	57.11.3223	22 kOhm	5%	
	R....35	57.11.3102	1 kOhm	5%	
	R....36	57.11.3103	10 kOhm	5%	
	R....37	57.11.3103	10 kOhm	5%	
	R....38	57.11.3222	2.2 kOhm	5%	
	R....39	57.11.3471	470 Ohm	5%	
	R....40	57.11.3471	470 Ohm	5%	
	R....41	57.11.3471	470 Ohm	5%	
	R....42	57.11.3471	470 Ohm	5%	
	R....43	57.11.3471	470 Ohm	5%	
	R....44	57.11.3222	2.2 kOhm	5%	
	R....45	57.11.3272	2.7 kOhm	5%	
	R....46	57.11.3272	2.7 kOhm	5%	
	R....47	57.11.3332	3.3 kOhm	5%	
	R....48	57.11.3224	220 kOhm	5%	
	R....49	57.11.3224	220 kOhm	5%	
	R....50	57.11.3472	4.7 kOhm	2%	
(01)	R....51	57.11.3102	1 kOhm	5%	
(03)	R....52	57.11.3471	470 Ohm	5%	
	RZ....1	57.88.4103		Network 8 * 10 kOhm (old part 1.010.014.57)	

Replaces CAPSTAN MOTOR CONTROL 1.810.766.00 for improved
Reliability of the power stages and no latch-up of IC1

(01) 20.12.88 Improved synchronizing performance on low speeds.
(02) 26.06.89 Improved input voltage range of IC1.
(03) 30.08.89 Prevents severe CMOS-IC-Failure on Power-on.

Note 1 - C15,C17 (27pF)
Only used in connection with TBA 120

Note 2 - Rectifier
General Instruments Nr. KBPC 104
Varo Nr. VS 448, V3447

Note 3 - Yamaichi Nr. FAS-16-17, Burndy Nr. FRS-16 BD-4F
Connection cable Studer Nr. 1.810.744.00

Note 4 - Contact pin: Studer 54.01.0020, Berg 75 160-102-36
Bridge: Studer 54.01.0021, Philips 2422 024 88003

Ce=Ceramic; El=Electrolytic; Sal=Solid Aluminium

MANUFACTURER: Fc=Fairchild; GI=General Instruments; ITT=Intermetall;
Mot=Motorola; NS=National Semiconductor; Ph=Philips;
RCA=Radio Corp. of America; Sse=Semicosmo; Sie=Siemens;
Sig=Signetics; St=Studer; Sx=Siliconix; Ph=Philips;
TI=Texas Instruments; TS=Teledyne Semiconductors;
Va=Varo

ORIG 88/02/28 (01) 88/12/20 (02) 89/06/26 (03) 89/08/30

SPOOLING MOTOR CONTROL PCB 1.810.760–00 GR24 "ESE"
CONNECTION PCB LEFT 1.810.726–00 GR9, CONNECTION PCB RIGHT 1.810.727–00 GR10

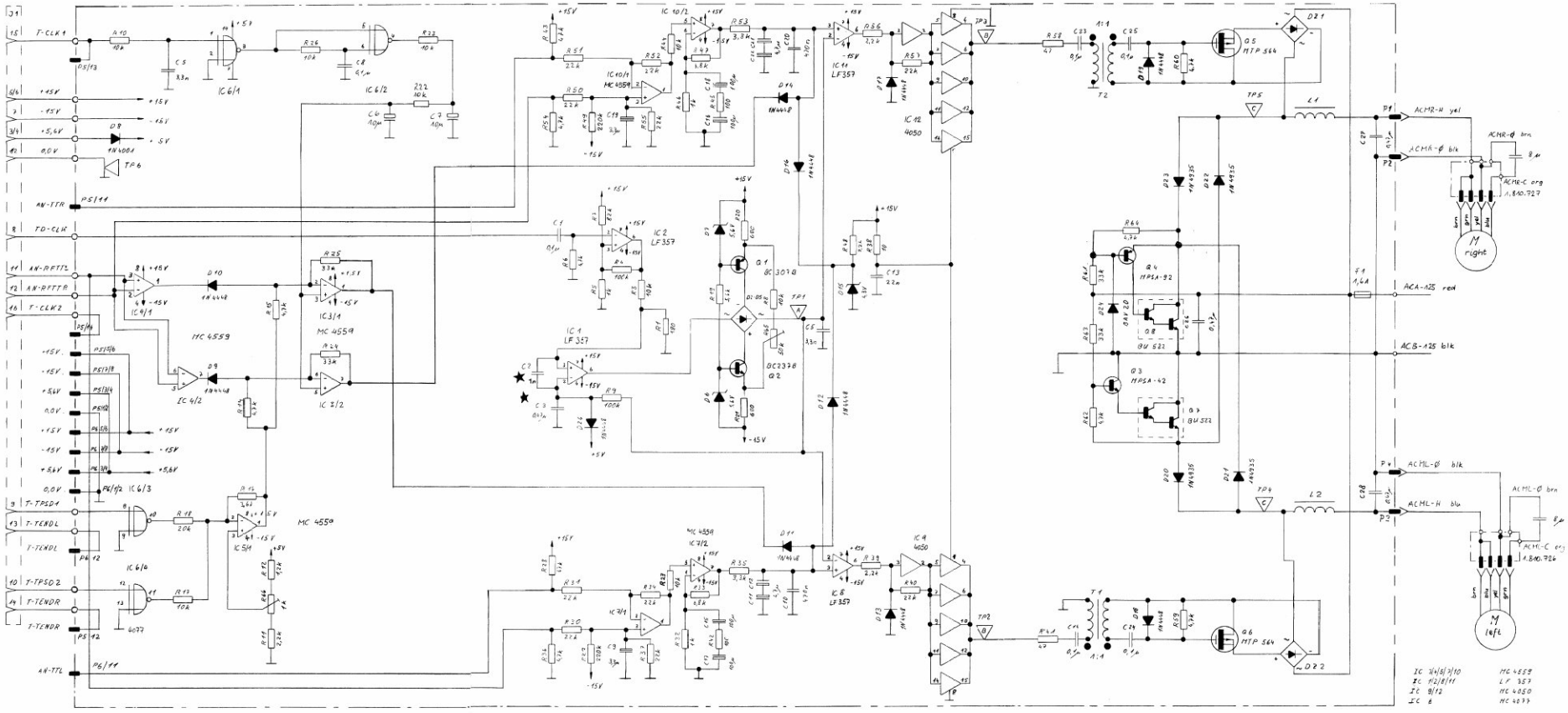

✶ HAS BEEN MODIFIED

SPOOLING MOTOR CONTROL PCB 1.810.760–00 GR24 "ESE"

P5: TAPE TENSION SENSOR LEFT

P6: TAPE TENSION SENSOR RIGHT

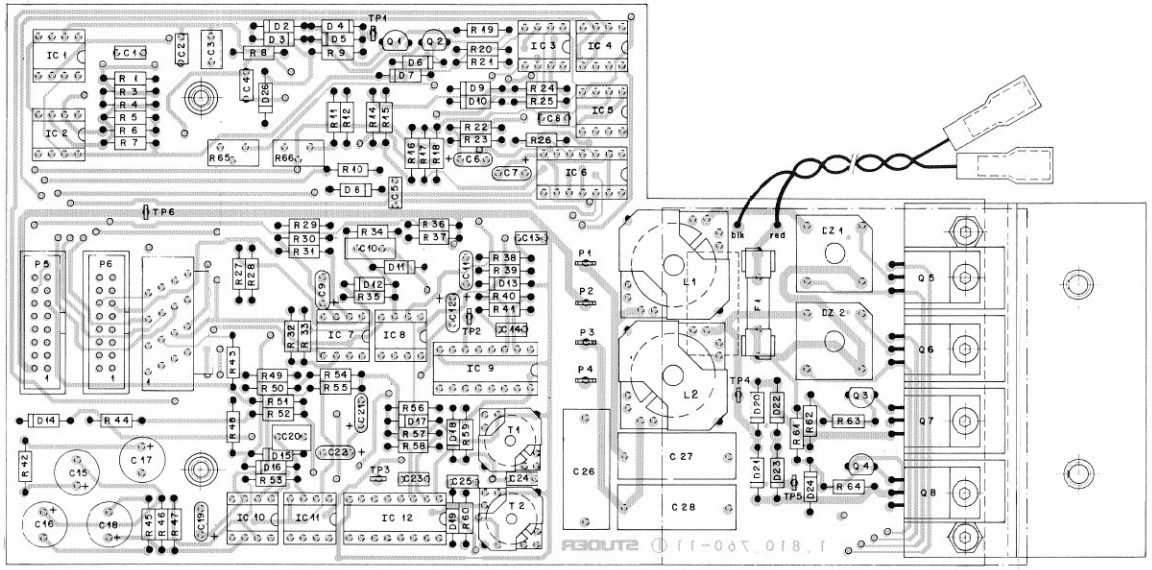

IND.	POS.NO.	PART NO.	VALUE	SPECIFICATIONS / EQUIVALENT	MANUF.
	R..0016	57.11.3362	3.6 kOhm	2%	
	R..0017	57.11.4103	10 kOhm		
	R..0018	57.11.3203	20 kOhm	2%	
	R..0019	57.11.4562	5.6 kOhm		
	R..0020	57.11.4681	680 Ohm		
	R..0021	57.11.4681	680 Ohm		
	R..0022	57.11.4103	10 kOhm		
	R..0023	57.11.4103	10 kOhm		
	R..0024	57.11.4333	33 kOhm		
	R..0025	57.11.4333	33 kOhm		
	R..0026	57.11.4103	10 kOhm		
	R..0027	57.11.4103	10 kOhm		
	R..0028	57.11.4473	47 kOhm		
	R..0029	57.11.4224	220 kOhm		
	R..0030	57.11.4223	22 kOhm		
	R..0031	57.11.4223	22 kOhm		
	R..0032	57.11.4102	1 kOhm		
	R..0033	57.11.4682	6.8 kOhm		
	R..0034	57.11.4223	22 kOhm		
	R..0035	57.11.4332	3.3 kOhm		
	R..0036	57.11.4472	4.7 kOhm		
	R..0037	57.11.4223	22 kOhm		
	R..0038	57.11.4100	10 Ohm		
	R..0039	57.11.4222	2.2 kOhm		
	R..0040	57.11.4223	22 kOhm		
	R..0041	57.11.4470	47 Ohm		
	R..0042	57.11.4101	100 Ohm		
	R..0043	57.11.4473	47 kOhm		
	R..0044	57.11.4103	10 kOhm		
	R..0045	57.11.4101	100 Ohm		
	R..0046	57.11.4102	1 kOhm		
	R..0047	57.11.4682	6.8 kOhm		
	R..0048	57.11.4222	2.2 kOhm		
	R..0049	57.11.4224	220 kOhm		
	R..0050	57.11.4223	22 kOhm		
	R..0051	57.11.4223	22 kOhm		
	R..0052	57.11.4223	22 kOhm		

S T U D E R (02) 84/01/17 PB SPOOLING MOTOR CONTROL "ESE" 1.810.760.00 PAGE 4

IND.	POS.NO.	PART NO.	VALUE	SPECIFICATIONS / EQUIVALENT	MANUF.
	R..0053	57.11.4332	3.3 kOhm		
	R..0054	57.11.4472	4.7 kOhm		
	R..0055	57.11.4223	22 kOhm		
	R..0056	57.11.4222	2.2 kOhm		
	R..0057	57.11.4223	22 kOhm		
	R..0058	57.11.4470	47 Ohm		
	R..0059	57.11.4472	4.7 kOhm		
	R..0060	57.11.4472	4.7 kOhm		
	R..0061	57.11.4333	33 kOhm		
	R..0062	57.11.4472	4.7 kOhm		
	R..0063	57.11.4333	33 kOhm		
	R..0064	57.11.4472	4.7 kOhm		
	R..0065	58.01.7103	50 kOhm	See note 3	
	R..0066	58.01.7102	1 kOhm	See note 4	
(01)	TP.0001	29.21.6002		Test Point	
(01)	TP.0002	29.21.6002		Test Point	
(01)	TP.0003	29.21.6002		Test Point	
(01)	TP.0004	29.21.6002		Test Point	
(01)	TP.0005	29.21.6002		Test Point	
(01)	TP.0006	29.21.6002		Test Point	
	T..0001	1.022.220.00		Impulse Transformer	St
	T..0002	1.022.220.00		Impulse Transformer	St

S T U D E R (02) 84/01/17 PB SPOOLING MOTOR CONTROL "ESE" 1.810.760.00 PAGE 5

IND.	POS.NO.	PART NO.	VALUE	SPECIFICATIONS / EQUIVALENT	MANUF.
	C..0001	59.06.0104	0.1 uF	10%, 63V	
(08)	C..0002	59.06.0332	3.3 nF	10%, 63V	
(02)	C..0002	59.06.0102	1 nF	10%, 63V	
	C..0003	59.06.0474	0.47 uF	10%, 63V	
	C..0004	59.06.0332	3.3 nF	10%, 63V	
	C..0005	59.06.0332	3.3 nF	10%, 63V	
	C..0006	59.26.2100	10 uF	-20%, 16V, Sal	Ph
	C..0007	59.26.2100	10 uF	-20%, 16V, Sal	Ph
	C..0008	59.06.0104	0.1 uF	10%, 63V	
	C..0009	59.26.2339	3.3 uF	20%, 16V, Sal	Ph
	C..0010	59.06.0474	0.47 uF	10%, 63V	
	C..0011	59.26.5479	4.7 uF	-20%, 25V, Sal	Ph
	C..0012	59.26.5479	4.7 uF	-20%, 25V, Sal	Ph
	C..0013	59.06.0223	22 nF	10%, 63V	
(08)	C..0014	59.06.0104	0.1 uF	10%, 63V	
	C..0014	59.06.0104	0.1 uF	10%, 63V	
	C..0015	59.22.5101	100 uF	-10%, 25V, El	
	C..0016	59.22.5101	100 uF	-10%, 25V, El	
	C..0017	59.22.5101	100 uF	-10%, 25V, El	
	C..0018	59.22.5101	100 uF	-10%, 25V, El	
	C..0019	59.26.2339	3.3 uF	20%, 16V, Sal	Ph
	C..0020	59.06.0474	0.47 uF	10%, 63V	
	C..0021	59.26.5479	4.7 uF	-20%, 25V, Sal	Ph
	C..0022	59.26.5479	4.7 uF	-20%, 25V, Sal	Ph
	C..0023	59.06.0104	0.1 uF	10%, 63V	
	C..0024	59.06.0104	0.1 uF	10%, 63V	
	C..0025	59.06.0104	0.1 uF	10%, 63V	
	C..0026	59.99.0450	0.47 uF	10%, 150V, Mp	
	C..0027	59.99.0450	0.47 uF	10%, 150V, Mp	
	C..0028	59.99.0450	0.47 uF	10%, 150V, Mp	
	D..0001	not used			
	D..0002	50.04.0125	1N4448		ITT,Ph,Ses,TI
	D..0003	50.04.0125	1N4448		ITT,Ph,Ses,TI
	D..0004	50.04.0125	1N4448		ITT,Ph,Ses,TI
	D..0005	50.04.0125	1N4448		ITT,Ph,Ses,TI
	D..0006	50.04.0125	1N4448		ITT,Ph,Ses
	D..0007	50.04.1108	5.6 V Z	BZX83C 5.6, BZX55C 5.6, ZPD 5.6	ITT,Ses
	D..0008	50.04.0122	1N4001	1N4002, 1N4003, 1N4004	Fc,GI,Mot
	D..0009	50.04.0125	1N4448		ITT,Ph,Ses,TI
	D..0010	50.04.0125	1N4448		ITT,Ph,Ses,TI
	D..0011	50.04.0125	1N4448		ITT,Ph,Ses,TI
	D..0012	50.04.0125	1N4448		ITT,Ph,Ses,TI
	D..0013	50.04.0125	1N4448		ITT,Ph,Ses,TI
	D..0014	50.04.0125	1N4448		ITT,Ph,Ses,TI
	D..0015	50.04.1120	4.3 V Z	BZX83C 4.3, BZX55C 4.3, ZPD 4.3	ITT,Ses
	D..0016	50.04.0125	1N4448		ITT,Ph,Ses,TI
	D..0017	50.04.0125	1N4448		ITT,Ph,Ses,TI
	D..0018	50.04.0125	1N4448		ITT,Ph,Ses,TI
	D..0019	50.04.0125	1N4448		ITT,Ph,Ses,TI
	D..0020	50.04.0508	1N4935RL	1N4936RL, A1148, RG10	GE,GI,Mot
	D..0021	50.04.0508	1N4935RL	1N4936RL, A1148, RG10	GE,GI,Mot
	D..0022	50.04.0508	1N4935RL	1N4936RL, A1148, RG10	GE,GI,Mot
	D..0023	50.04.0508	1N4935RL	1N4936RL, A1148, RG10	GE,GI,Mot
	D..0024	50.04.0133	BAV20		ITT,Ph
	D..0025		not used		
	D..0026	50.04.0125	1N4448		ITT,Ph,Ses,TI
	DZ.0001	70.01.0226	Rectifier	ZPD V, Z A, see note 1	GI,Va
	DZ.0002	70.01.0226	Rectifier	ZPD V, Z A, see note 1	GI,Va
	F..0001	51.01.0119	1.6 A	Fuse, slow blow, 5 = 20 mm	
	IC.0001	50.05.0102	LF357P	LF357N	TI,NS
	IC.0002	50.05.0102	LF357P	LF357N	TI,NS
	IC.0003	50.05.0107	RC4559NB		Ra
	IC.0004	50.05.0107	RC4559NB		Ra
	IC.0005	50.05.0107	RC4559NB		Ra
	IC.0006	50.07.0017	MC14077BCP		Mot
	IC.0007	50.05.0107	RC4559NB		Ra
	IC.0008	50.05.0102	LF357P	LF357N	TI,NS
	IC.0009	50.07.0050	MC14050BCP	4050BCP	Fc,Mot
	IC.0010	50.05.0107	RC4559NB		Ra
	IC.0011	50.05.0102	LF357P	LF357N	TI,NS

S T U D E R (02) 84/01/17 PB SPOOLING MOTOR CONTROL "ESE" 1.810.760.00 PAGE 1

IND.	POS.NO.	PART NO.	VALUE	SPECIFICATIONS / EQUIVALENT	MANUF.
	IC.0012	50.07.0050	MC14050BCP	4050BCP	Fc,Mot
	J..0001	54.14.9021	16 cont.	See note 2	
	L..0001	1.022.213.00	1 mH	Storage coil	St
	L..0002	1.022.213.00	1 mH	Storage coil	St
	P..0001	54.02.3320			
	P..0002	54.02.3320			
	P..0003	54.02.3320			
	P..0004	54.02.3320			
	P..0005	54.14.2002	16 cont.	Yamaichi Nr. FAP-16-0824	
	P..0006	54.14.2002	16 cont.	Yamaichi Nr. FAP-16-0824	
	Q..0001	50.03.0515	BC307B	BC251B, BC557B, BC560B	ITT,Mot,Ph,Tf,TI
	Q..0002	50.03.0340	BC337-25		Tf
	Q..0003	50.03.0484	MPSA42		Fc,Mot
	Q..0004	50.03.0485	MPSA92		Fc,Mot
	Q..0005	50.03.0519	MTP5N35	IRF733, BUZ41L	IR,Mot,Sie
	Q..0006	50.03.0519	MTP5N35	IRF733, BUZ41L	IR,Mot,Sie
	Q..0007	50.03.0520	BU522		Mot
	Q..0008	50.03.0520	BU522		Mot
	R..0001	57.11.4181	180 Ohm	see note 5	
	R..0002		not used		
	R..0003	57.11.4103	10 kOhm		
	R..0004	57.11.4104	100 kOhm		
	R..0005	57.11.4102	1 kOhm		
	R..0006	57.11.4472	4.7 kOhm		
	R..0007	57.11.4823	82 kOhm		
	R..0008	57.11.4103	10 kOhm		
	R..0009	57.11.4104	100 kOhm		
	R..0010	57.11.4103	10 kOhm		
	R..0011	57.11.4222	2.2 kOhm		
	R..0012	57.11.4122	1.2 kOhm		
	R..0014	57.11.4472	4.7 kOhm		
	R..0015	57.11.4472	4.7 kOhm		

S T U D E R (02) 84/01/17 PB SPOOLING MOTOR CONTROL "ESE" 1.810.760.00 PAGE 3

IND.	POS.NO.	PART NO.	VALUE	SPECIFICATIONS / EQUIVALENT	MANUF.
	(01) 83.04.11 Testpoints added.				
	(02) 84.01.17 C Z was changed in order to prevent the delta generator from uncontrolled oscillations at power-on.				

Note 1 - Rectifier
General Instruments Nr. KBPC 104
Varo Nr. VS 448, VS447

Note 2 - Yamaichi Nr. FAS-16-17, Burndy Nr. FRS-16 80-4P
Connection cable Studer Nr. 1.810.745.00

Note 3 - 50 kOhm Potentiometer lin.= 10%
Bourns Nr. 3386 M-1-503
Diplomatic Nr. 361 50k / S 25.640 10%

Note 4 - 1 kOhm Potentiometer lin.= 10%
Bourns Nr. 3386 M-1-102
Diplomatic Nr. 361 1k / S 25.633 10%

Note 5 - All resistors 5% tolerance, unless otherwise noted

Ce=Ceramic, El=Electrolytic, Mp=Metallized paper, Sal=Solid alluminium

MANUFACTURER: Fc=Fairchild, GE=General Electric,
GI=General Instruments, IR=International Rectifier,
ITT=Intermetall, Mot=Motorola,
NS=National Semiconductors, Ph=Philips, Ra=Raytheon,
Ses=Sescosem, Sie=Siemens, St=Studer, Tf=Telefunken,
TI=Texas Instruments, Va=Varo

ORIG 82/05/03 (01) 83/04/11 (02) 84/01/17

S T U D E R (02) 84/01/17 PB SPOOLING MOTOR CONTROL "ESE" 1.810.760.00 PAGE 6

SPOOLING MOTOR CONTROL PCB 1.810.760–81 GR24 "ESE"
CONNECTION PCB LEFT 1.810.726–00 GR9, CONNECTION PCB RIGHT 1.810.727–00 GR10

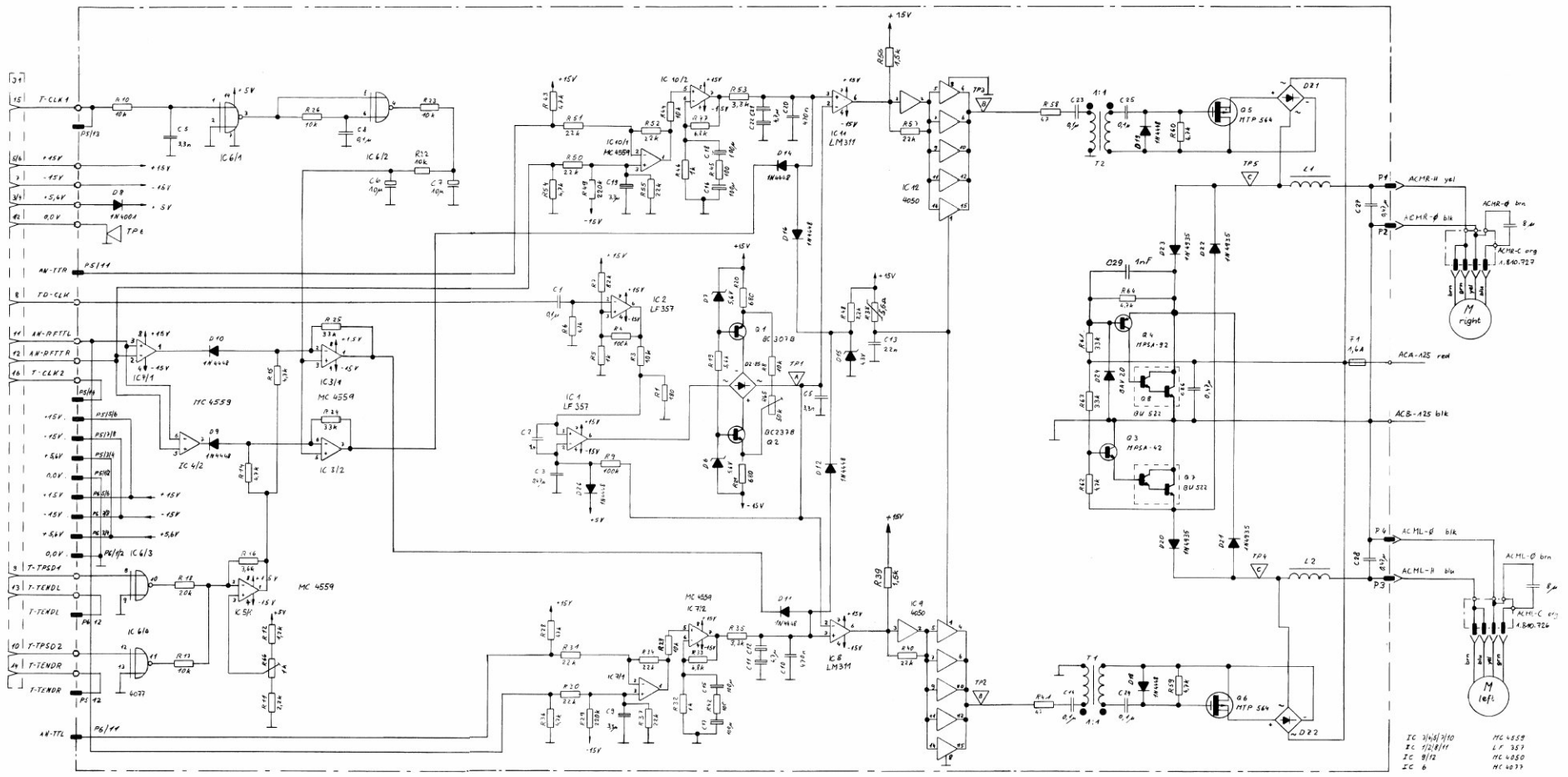

✱ HAS BEEN MODIFIED

SPOOLING MOTOR CONTROL PCB 1.810.760–81 GR24 "ESE"

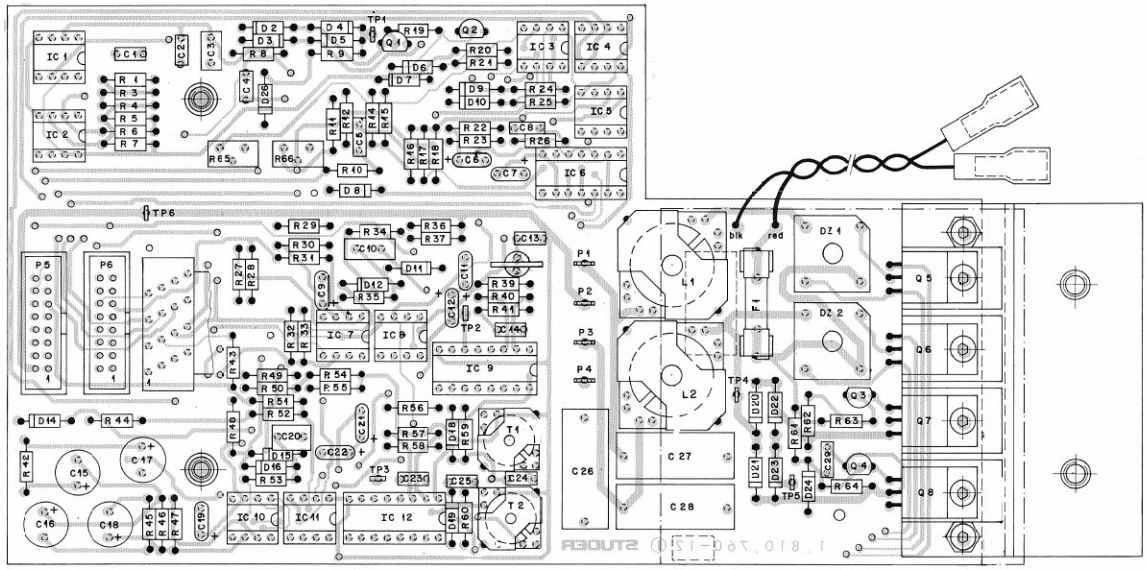

IND.	POS.NO.	PART NO.	VALUE	SPECIFICATIONS / EQUIVALENT	MANUF.
	R..0015	57.11.4472	4.7 kOhm		
	R..0016	57.11.3362	3.6 kOhm	2%	
	R..0017	57.11.4103	10 kOhm		
	R..0018	57.11.3203	20 kOhm	2%	
	R..0019	57.11.4562	5.6 kOhm		
	R..0020	57.11.4681	680 Ohm		
	R..0021	57.11.4681	680 Ohm		
	R..0022	57.11.4103	10 kOhm		
	R..0023	57.11.4103	10 kOhm		
	R..0024	57.11.4333	33 kOhm		
	R..0025	57.11.4333	33 kOhm		
	R..0026	57.11.4103	10 kOhm		
	R..0027	57.11.4103	10 kOhm		
	R..0028	57.11.4473	47 kOhm		
	R..0029	57.11.4224	220 kOhm		
	R..0030	57.11.4223	22 kOhm		
	R..0031	57.11.4223	22 kOhm		
	R..0032	57.11.4102	1 kOhm		
	R..0033	57.11.4682	6.8 kOhm		
	R..0034	57.11.4223	22 kOhm		
	R..0035	57.11.4332	3.3 kOhm		
	R..0036	57.11.4472	4.7 kOhm		
	R..0037	57.11.4223	22 kOhm		
	R..0038	57.99.0209	5.6 Ohm	PTC-Resistor, Philips Nr. 2322 562 91005	
	R..0039	57.11.4152	1.5 kOhm		
	R..0040	57.11.4223	22 kOhm		
	R..0041	57.11.4470	47 Ohm		
	R..0042	57.11.4101	100 Ohm		
	R..0043	57.11.4473	47 kOhm		
	R..0044	57.11.4103	10 kOhm		
	R..0045	57.11.4101	100 Ohm		
	R..0046	57.11.4102	1 kOhm		
	R..0047	57.11.4682	6.8 kOhm		
	R..0048	57.11.4222	2.2 kOhm		
	R..0049	57.11.4224	220 kOhm		
	R..0050	57.11.4223	22 kOhm		
	R..0051	57.11.4223	22 kOhm		

IND.	POS.NO.	PART NO.	VALUE	SPECIFICATIONS / EQUIVALENT	MANUF.
	R..0052	57.11.4223	22 kOhm		
	R..0053	57.11.4332	3.3 kOhm		
	R..0054	57.11.4472	4.7 kOhm		
	R..0055	57.11.4223	22 kOhm		
	R..0056	57.11.4152	1.5 kOhm		
	R..0057	57.11.4223	22 kOhm		
	R..0058	57.11.4470	47 Ohm		
	R..0059	57.11.4472	4.7 kOhm		
	R..0060	57.11.4472	4.7 kOhm		
	R..0061	57.11.4333	33 kOhm		
	R..0062	57.11.4472	4.7 kOhm		
	R..0063	57.11.4333	33 kOhm		
	R..0064	57.11.4472	4.7 kOhm		
	R..0065	58.01.9503	50 kOhm	See note 3	
	R..0066	58.01.9102	1 kOhm	See note 4	
	TP..0001	29.21.6002		Test Point	
	TP..0002	29.21.6002		Test Point	
	TP..0003	29.21.6002		Test Point	
	TP..0004	29.21.6002		Test Point	
	TP..0005	29.21.6002		Test Point	
	TP..0006	29.21.6002		Test Point	
	T..0001	1.022.220.00		Impulse Transformer	St
	T..0002	1.022.220.00		Impulse Transformer	St

IND.	POS.NO.	PART NO.	VALUE	SPECIFICATIONS / EQUIVALENT	MANUF.
	C..0001	59.06.0104	0.1 uF	10%, 63V	
(00)	C..0002	59.06.0332	3.3 nF	10%, 63V	
(01)	C..0002	59.06.0102	1 nF	10%, 63V	
	C..0003	59.06.0474	0.47 uF	10%, 63V	
	C..0004	59.06.0332	3.3 nF	10%, 63V	
	C..0005	59.06.0332	3.3 nF	10%, 63V	
	C..0006	59.26.2100	10 uF	-20%, 16V, Sal	Ph
	C..0007	59.26.2100	10 uF	-20%, 16V, Sal	Ph
	C..0008	59.06.0104	0.1 uF	10%, 63V	
	C..0009	59.26.2339	3.3 uF	20%, 16V, Sal	Ph
	C..0010	59.06.0474	0.47 uF	10%, 63V	
	C..0011	59.26.5479	4.7 uF	-20%, 25V, Sal	Ph
	C..0012	59.26.5479	4.7 uF	-20%, 25V, Sal	Ph
	C..0013	59.06.0223	22 nF	10%, 63V	
(00)	C..0014	59.06.0104	0.1 uF	10%, 63V	
	C..0014	59.06.0104	0.1 uF	10%, 63V	
	C..0015	59.22.5101	100 uF	-10%, 25V, El	
	C..0016	59.22.5101	100 uF	-10%, 25V, El	
	C..0017	59.22.5101	100 uF	-10%, 25V, El	
	C..0018	59.22.5101	100 uF	-10%, 25V, El	
	C..0019	59.26.2339	3.3 uF	20%, 16V, Sal	Ph
	C..0020	59.06.0474	0.47 uF	10%, 63V	
	C..0021	59.26.5479	4.7 uF	-20%, 25V, Sal	Ph
	C..0022	59.26.5479	4.7 uF	-20%, 25V, Sal	Ph
	C..0023	59.06.0104	0.1 uF	10%, 63V	
	C..0024	59.06.0104	0.1 uF	10%, 63V	
	C..0025	59.06.0104	0.1 uF	10%, 63V	
	C..0026	59.99.0450	0.47 uF	10%, 150V, Mp	
	C..0027	59.99.0450	0.47 uF	10%, 150V, Mp	
	C..0028	59.99.0450	0.47 uF	10%, 150V, Mp	
	C..0029	59.06.0102	1000 pF	10%, 63V, PETP	
	D..0001		no: used		
	D..0002	50.04.0125	1N4448		ITT+Ph+Ses+TI
	D..0003	50.04.0125	1N4448		ITT+Ph+Ses+TI
	D..0004	50.04.0125	1N4448		ITT+Ph+Ses+TI
	D..0005	50.04.0125	1N4448		ITT+Ph+Ses+TI

IND.	POS.NO.	PART NO.	VALUE	SPECIFICATIONS / EQUIVALENT	MANUF.
	D..0006	50.04.1108	5.6 V Z	BZX83C 5.6, BZX55C 5.6, ZPD 5.6	ITT+Ses
	D..0007	50.04.1108	5.6 V Z	BZX83C 5.6, BZX55C 5.6, ZPD 5.6	ITT+Ses
	D..0008	50.04.0122	1N4001	1N4002, 1N4003, 1N4004	Fc+GI +Mot
	D..0009	50.04.0125	1N4448		ITT+Ph+Ses+TI
	D..0010	50.04.0125	1N4448		ITT+Ph+Ses+TI
	D..0011	50.04.0125	1N4448		ITT+Ph+Ses+TI
	D..0012	50.04.0125	1N4448		ITT+Ph+Ses+TI
	D..0013		not used		
	D..0014	50.04.0125	1N4448		ITT+Ph+Ses+TI
	D..0015	50.04.1120	4.3 V Z	BZX83C 4.3, BZX55C 4.3, ZPD 4.3	ITT+Ses
	D..0016	50.04.0125	1N4448		ITT+Ph+Ses+TI
	D..0017		not used		
	D..0018	50.04.0125	1N4448		ITT+Ph+Ses+TI
	D..0019	50.04.0125	1N4448		ITT+Ph+Ses+TI
	D..0020	50.34.0508	1N4935RL	1N4936RL, A1148, RGLD	GE+GI +Mot
	D..0021	50.34.0508	1N4935RL	1N4936RL, A1148, RGLD	GE+GI +Mot
	D..0022	50.34.0508	1N4935RL	1N4936RL, A1148, RGLD	GE+GI +Mot
	D..0023	50.34.0508	1N4935RL	1N4936RL, A1148, RGLD	GE+GI +Mot
	D..0024	50.04.0133	BAV20		ITT+Ph
	D..0025		not used		
	D..0026	50.04.0125	1N4448		ITT+Ph+Ses+TI
	DZ.0001	70.01.0226	Rectifier	28D V, 2 A, see note 1	GI+Va
	DZ.0002	70.01.0226	Rectifier	28D V, 2 A, see note 1	GI+Va
	F..0001	51.01.0119	1.6 A	Fuse, slow blow, 5 * 20 mm	
	IC.0001	50.04.0102	LF357P	LF357N	TI+NS
	IC.0002	50.04.0102	LF357P	LF357N	TI+NS
	IC.0003	50.04.0107	RC4559NB		RA
	IC.0004	50.04.0107	RC4559NB		RA
	IC.0005	50.04.0107	RC4559NB		RA
	IC.0006	50.07.0017		MC14071BCP	Mot
	IC.0007	50.04.0107	RC4559NB		RA
	IC.0008	50.11.0114	LM311P	LM311N	Mot+NS
	IC.0009	50.07.0050	MC14050	4050BCP	Mot+FC
	IC.0010	50.04.0107	RC4559NB		RA

IND.	POS.NO.	PART NO.	VALUE	SPECIFICATIONS / EQUIVALENT	MANUF.
	IC.0011	50.11.0114	LM311P	LM311N	Mot+NS
	IC.0012	50.07.0050	MC14050	4050BCP	Mot+FC
	J..0001	54.14.0021	16 CONT.	SEE NOTE 2	
	L..0001	1.022.217.00	1 mH	Storage coil	St
	L..0002	1.022.217.00	1 mH	Storage coil	St
	P..0001	54.02.3320			
	P..0002	54.02.3320			
	P..0003	54.02.3320			
	P..0004	54.02.3320			
	P..0005	54.14.7002	16 cont.	Yamaichi Nr. FAP-16-0824	
	P..0006	54.14.7002	16 cont.	Yamaichi Nr. FAP-16-0824	
	Q..0001	50.03.3515	BC307B	BC251B, BC557B, BC560B	ITT+Mot+Ph+TF+TI
	Q..0002	50.03.3340	BC337-25		TF
	Q..0003	50.03.3484	MPSA42		Fc+Mot
	Q..0004	50.03.3485	MPSA92		Fc+Mot
	Q..0005	50.03.3519	MEP5N35	IRF233, BUZ41L	IR+Mot+Sie
	Q..0006	50.03.3519	MEP5N35	IRF233, BUZ41L	IR+Mot+Sie
	Q..0007	50.03.3520	BU522		Mot
	Q..0008	50.03.3520	BU522		Mot
	R..0001	57.11.4181	180 Ohm	see note 5	
	R..0002		not used		
	R..0003	57.11.4103	10 kOhm		
	R..0004	57.11.4104	100 kOhm		
	R..0005	57.11.4102	1 kOhm		
	R..0006	57.11.4472	4.7 kOhm		
	R..0007	57.11.4823	82 kOhm		
	R..0008	57.11.4103	10 kOhm		
	R..0009	57.11.4104	100 kOhm		
	R..0010	57.11.4103	10 kOhm		
	R..0011	57.11.4222	2.2 kOhm		
	R..0012	57.11.4122	1.2 kOhm		
	R..0014	57.11.4472	4.7 kOhm		

IND.	POS.NO.	PART NO.	VALUE	SPECIFICATIONS / EQUIVALENT	MANUF.

(01) 84.01.17 C 2 was changed in order to prevent the delta generator from uncontrolled oscillations at power-on.

Note 1 - Rectifier
General Instruments Nr. KBPC 104
Varo Nr. VS 448, VS447

Note 2 - Yamaichi Nr. FAS-16-17, Burndy Nr. FRS-16 88-4P
Connection cable Studer Nr. 1.810.745.00

Note 3 - 50 kOhm Potentiometer lin., 10%
Bourns Nr. 3386 X-1-503
Spektrol Nr. 63 X 503 TQ10

Note 4 - 1 kOhm Potentiomator lin., 10%
Bourns Nr. 3386 X-1-102
Spektrol Nr. 63 X 102 TQ10

Note 5 - All resistors 5% tolerance, unless otherwise noted

Ce=Ceramic, El=Electrolytic, Mp=Metallized paper, Sal=Solid alluminium

MANUFACTURER: Fc=Fairchilds GE=General Electric,
GI=General Instruments, IR=International Rectifier,
ITT=Intermetall, Mot=Motorola,
NS=National Semiconductors, Ph=Philips, Ra=Raytheon,
Ses=Sescosem, Sie=Siemens, St=Studer, Tf=Telefunken,
TI=Texas Instruments, Va=Varo

TRIG 83/09/19 (01) 84/01/17

SPOOLING MOTOR CONTROLLER 1.810.760-82 GR24 "ESE"
- CONNECTION PCB 1.810.726-00 GR9
- CONNECTION PCB 1.810.727-00, GR10

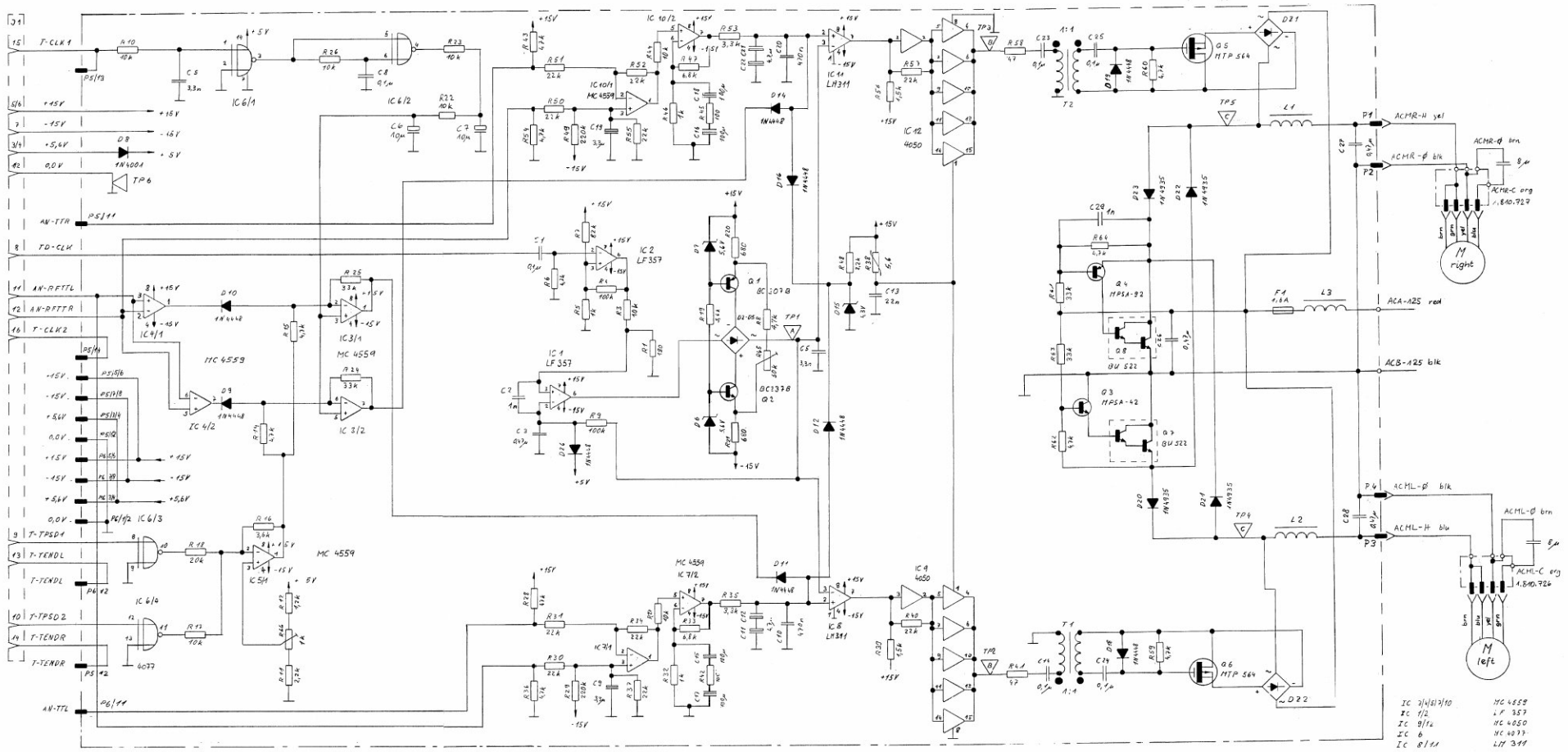

© 28.10.85 Buk	A 810 Tape Deck Control		
STUDER	Spooling Motor Control	SC 1.810.760-82	PAGE 2 OF 2

© 28.10.85 Buk	A 810 Tape Deck Control		
STUDER	Spooling Motor Control	SC 1.810.760-82	PAGE 1 OF 2

PUBLISHED: 12/86

SPOOLING MOTOR CONTROLLER 1.810.760-82 GR24 "ESE"

P5: TAPE TENSION SENSOR RIGHT

P6: TAPE TENSION SENSOR LEFT

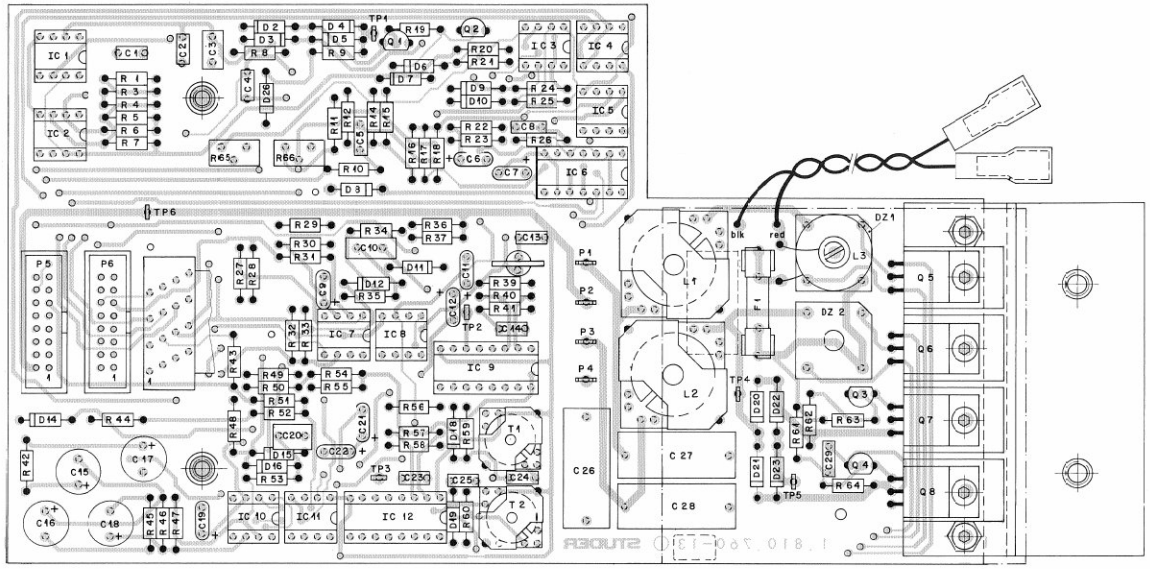

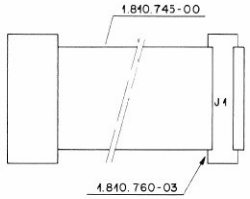

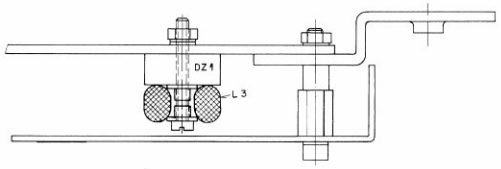

IND.	POS.NO.	PART NO.	VALUE	SPECIFICATIONS / EQUIVALENT	MANUF.
	R.0015	57.11.4472	4.7 kOhm		
	R.0016	57.11.3362	3.6 kOhm	2%	
	R.0017	57.11.4103	10 kOhm		
	R.0018	57.11.3203	20 kOhm	2%	
	R.0019	57.11.4562	5.6 kOhm		
	R.0020	57.11.4681	680 Ohm		
	R.0021	57.11.4681	680 Ohm		
	R.0022	57.11.4103	10 kOhm		
	R.0023	57.11.4103	10 kOhm		
	R.0024	57.11.4333	33 kOhm		
	R.0025	57.11.4333	33 kOhm		
	R.0026	57.11.4103	10 kOhm		
	R.0027	57.11.4103	10 kOhm		
	R.0028	57.11.4473	47 kOhm		
	R.0029	57.11.4224	220 kOhm		
	R.0030	57.11.4223	22 kOhm		
	R.0031	57.11.4223	22 kOhm		
	R.0032	57.11.4102	1 kOhm		
	R.0033	57.11.4682	6.8 kOhm		
	R.0034	57.11.4223	22 kOhm		
	R.0035	57.11.4332	3.3 kOhm		
	R.0036	57.11.4472	4.7 kOhm		
	R.0037	57.11.4223	22 kOhm		
	R.0038	57.99.0209	5.6 Ohm	PTC-Resistor, Philips Nr. 2322 662 91005	
	R.0039	57.11.4152	1.5 kOhm		
	R.0040	57.11.4223	22 kOhm		
	R.0041	57.11.4470	47 Ohm		
	R.0042	57.11.4101	100 Ohm		
	R.0043	57.11.4473	47 kOhm		
	R.0044	57.11.4103	10 kOhm		
	R.0045	57.11.4101	100 Ohm		
	R.0046	57.11.4102	1 kOhm		
	R.0047	57.11.4682	6.8 kOhm		
	R.0048	57.11.4222	2.2 kOhm		
	R.0049	57.11.4224	220 kOhm		
	R.0050	57.11.4223	22 kOhm		
	R.0051	57.11.4223	22 kOhm		

IND.	POS.NO.	PART NO.	VALUE	SPECIFICATIONS / EQUIVALENT	MANUF.
	R.0052	57.11.4223	22 kOhm		
	R.0053	57.11.4332	3.3 kOhm		
	R.0054	57.11.4472	4.7 kOhm		
	R.0055	57.11.4223	22 kOhm		
	R.0056	57.11.4152	1.5 kOhm		
	R.0057	57.11.4223	22 kOhm		
	R.0058	57.11.4470	47 Ohm		
	R.0059	57.11.4472	4.7 kOhm		
	R.0060	57.11.4472	4.7 kOhm		
	R.0061	57.11.4333	33 kOhm		
	R.0062	57.11.4472	4.7 kOhm		
	R.0063	57.11.4333	33 kOhm		
	R.0064	57.11.4472	4.7 kOhm		
	R.0065	58.01.9303	50 kOhm	See note 3	
	R.0066	58.01.9102	1 kOhm	See note 4	
	TP.0001	29.21.6002		Test Point	
	TP.0002	29.21.6002		Test Point	
	TP.0003	29.21.6002		Test Point	
	TP.0004	29.21.6002		Test Point	
	TP.0005	29.21.6002		Test Point	
	TP.0006	29.21.6002		Test Point	
	T.0001	1.022.220.00		Impulse Transformer	St
	T.0002	1.022.220.00		Impulse Transformer	St

IND.	POS.NO.	PART NO.	VALUE	SPECIFICATIONS / EQUIVALENT	MANUF.
	C.0001	59.06.0104	0.1 uF	10%, 63V	
	C.0002	59.06.0102	1 nF	10%, 63V	
	C.0003	59.06.0474	0.47 uF	10%, 63V	
	C.0004	59.06.0332	3.3 nF	10%, 63V	
	C.0005	59.06.0332	3.3 nF	10%, 63V	
	C.0006	59.26.2100	10 uF	-20%, 16V, Sal	Ph
	C.0007	59.26.2100	10 uF	-20%, 16V, Sal	Ph
	C.0008	59.06.0104	0.1 uF	10%, 63V	
	C.0009	59.26.2339	3.3 uF	20%, 16V, Sal	Ph
	C.0010	59.06.0474	0.47 uF	10%, 63V	
	C.0011	59.26.5479	4.7 uF	-20%, 25V, Sal	Ph
	C.0012	59.26.5479	4.7 uF	-20%, 25V, Sal	Ph
	C.0013	59.06.0223	22 nF	10%, 63V	
(00)	C.0014	59.06.0104	0.1 uF	10%, 63V	
	C.0014	59.06.0104	0.1 uF	10%, 63V	
	C.0015	59.22.5101	100 uF	-10%, 25V, El	
	C.0016	59.22.5101	100 uF	-10%, 25V, El	
	C.0017	59.22.5101	100 uF	-10%, 25V, El	
	C.0018	59.22.5101	100 uF	-10%, 25V, El	
	C.0019	59.26.2339	3.3 uF	20%, 16V, Sal	Ph
	C.0020	59.06.0474	0.47 uF	10%, 63V	
	C.0021	59.26.5479	4.7 uF	-20%, 25V, Sal	Ph
	C.0022	59.26.5479	4.7 uF	-20%, 25V, Sal	Ph
	C.0023	59.06.0104	0.1 uF	10%, 63V	
	C.0024	59.06.0104	0.1 uF	10%, 63V	
	C.0025	59.06.0104	0.1 uF	10%, 63V	
	C.0026	59.99.0450	0.47 uF	10%, 150V, Mp	
	C.0027	59.99.0450	0.47 uF	10%, 150V, Mp	
	C.0028	59.99.0450	0.47 uF	10%, 150V, Mp	
	C.0029	59.06.0102	1000 pF	10%, 63V, PETP	
	D.0001		not used		
	D.0002	50.04.0125	1N4448		ITT+Ph+Ses+TI
	D.0003	50.04.0125	1N4448		ITT+Ph+Ses+TI
	D.0004	50.04.0125	1N4448		ITT+Ph+Ses+TI
	D.0005	50.04.0125	1N4448		ITT+Ph+Ses+TI
	D.0006	50.04.1108	5.6 V Z	BZX83C 5.6, BZX55C 5.6, ZPD 5.6	ITT+Ses

IND.	POS.NO.	PART NO.	VALUE	SPECIFICATIONS / EQUIVALENT	MANUF.
	D.0007	50.04.1108	5.6 V Z	BZX83C 5.6, BZX55C 5.6, ZPD 5.6	ITT+Ses
	D.0008	50.04.0122	1N4001	1N4002, 1N4003, 1N4004	Fc+GI +Mot
	D.0009	50.04.0125	1N4448		ITT+Ph+Ses+TI
	D.0010	50.04.0125	1N4448		ITT+Ph+Ses+TI
	D.0011	50.04.0125	1N4448		ITT+Ph+Ses+TI
	D.0012	50.04.0125	1N4448		ITT+Ph+Ses+TI
	D.0013		not used		
	D.0014	50.04.0125	1N4448		ITT+Ph+Ses+TI
	D.0015	50.04.1120	4.3 V Z	BZX83C 4.3, BZX55C 4.3, ZPD 4.3	ITT+Ses
	D.0016	50.04.0125	1N4448		ITT+Ph+Ses+TI
	D.0017		not used		
	D.0018	50.04.0125	1N4448		ITT+Ph+Ses+TI
	D.0019	50.04.0125	1N4448		ITT+Ph+Ses+TI
	D.0020	50.04.0508	1N4935RL	1N4935RL, A1148, RGLD	GE+GI +Mot
	D.0021	50.04.0508	1N4935RL	1N4935RL, A1148, RGLD	GE+GI +Mot
	D.0022	50.04.0508	1N4935RL	1N4935RL, A1148, RGLD	GE+GI +Mot
	D.0023	50.04.0508	1N4935RL	1N4935RL, A1148, RGLD	GE+GI +Mot
	D.0024		not used		
	D.0025		not used		
	D.0026	50.04.0125	1N4448		ITT+Ph+Ses+TI
	DZ.0001	70.01.0226	Rectifier	280 V, 2 A, see note 1	GI+Va
	DZ.0002	70.01.0226	Rectifier	280 V, 2 A, see note 1	GI+Va
	F.0001	51.01.0119	1.6 A	Fuse, slow blow, 5 x 20 mm	
	IC.0001	50.09.0102	LF357P	LF357N	TI+NS
	IC.0002	50.09.0102	LF357P	LF357N	TI+NS
	IC.0003	50.09.0107	RC4559NB		Ra
	IC.0004	50.09.0107	RC4559NB		Ra
	IC.0005	50.09.0107	RC4559NB		Ra
	IC.0006	50.07.0017		MC14077BCP	Mot
	IC.0007	50.09.0107	RC4559NB		Ra
	IC.0008	50.11.0114	LM311P	LM311N	Mot+NS
	IC.0009	50.07.0050	MC14050	4050BCP	Mot+Fc
	IC.0010	50.09.0107	RC4559NB		Ra
	IC.0011	50.11.0114	LM311P	LM311N	Mot+NS

IND.	POS.NO.	PART NO.	VALUE	SPECIFICATIONS / EQUIVALENT	MANUF.
	IC.0012	50.07.0050	MC14050	4050BCP	Mot+Fc
	J.0001	54.14.0021	16 cont.	see note 2	
	L.0001	1.022.219.00	1 mH	Storage coil	St
	L.0002	1.022.219.00	1 mH	Storage coil	St
	L.0003	62.03.0015	72 uH	Filter coil, 2 A, 0.068 Ohm	
	P.0001	54.02.0320			
	P.0002	54.02.0320			
	P.0003	54.02.0320			
	P.0004	54.02.0320			
	P.0005	54.14.2002	16 cont.	Yamaichi Nr. FAP-16-0824	
	P.0006	54.14.2002	16 cont.	Yamaichi Nr. FAP-16-0824	
	Q.0001	50.03.0515	BC307B	BC251B, BC557B, BC560B	ITT+Mot+Ph+Tf+TI
	Q.0002	50.03.0340	BC337-25		Tf
	Q.0003	50.03.0484	MPSA42		Fc+Mot
	Q.0004	50.03.0485	MPSA92		Fc+Mot
	Q.0005	50.03.0519	MTP5N35	IRF733, BUZ41L	IR+Mot+Sie
	Q.0006	50.03.0519	MTP5N35	IRF733, BUZ41L	IR+Mot+Sie
	Q.0007	50.03.0520	BU522		Mot
	Q.0008	50.03.0520	BU522		Mot
	R.0001	57.11.4181	180 Ohm	see note 5	
	R.0002		not used		
	R.0003	57.11.4103	10 kOhm		
	R.0004	57.11.4104	100 kOhm		
	R.0005	57.11.4102	1 kOhm		
	R.0006	57.11.4472	4.7 kOhm		
	R.0007	57.11.4823	82 kOhm		
	R.0008	57.11.4472	4.7 kOhm		
	R.0009	57.11.4104	100 kOhm		
	R.0010	57.11.4103	10 kOhm		
	R.0011	57.11.4222	2.2 kOhm		
	R.0012	57.11.4122	1.2 kOhm		
	R.0014	57.11.4472	4.7 kOhm		

IND.	POS.NO.	PART NO.	VALUE	SPECIFICATIONS / EQUIVALENT	MANUF.

Note 1 - Rectifier
General Instruments Nr. KBPC 104
Varo Nr. VS 4461, VS447

Note 2 - Yamaichi Nr. FAS-16-17, Burndy Nr. FRS-16 BD-4P
Connection cable Studer Nr. 1.810.745.00

Note 3 - 50 kOhm Potentiometer lin., 10%
Bourns Nr. 3386 X-1-503
Spektrol Nr. 63 X 503 T010

Note 4 - 1 kOhm Potentiometer lin., 10%
Bourns Nr. 3386 X-1-102
Spektrol Nr. 63 X 102 T010

Note 5 - All resistors 5% tolerance, unless otherwise noted

Ce=Ceramic, El=Electrolytic, Mp=Metallized paper, Sal=Solid alluminium

MANUFACTURERS: Fc=Fairchild, GE=General Electric, GI=General Instruments, IR=International Rectifier, ITT=Intermetall, Mot=Motorola, NS=National Semiconductor, Ph=Philips, Ra=Raytheon, Ses=Sescosem, Sie=Siemens, St=Studer, Tf=Telefunken, TI=Texas Instruments, Va=Varo

ORIG 85/10/28

PUBLISHED: 12/86

TAPE TENSION SENSOR PCB LEFT 1.810.730–81 GR27 "ESE"
TAPE END SENSOR PCB 1.810.729–00 GR27 EL4

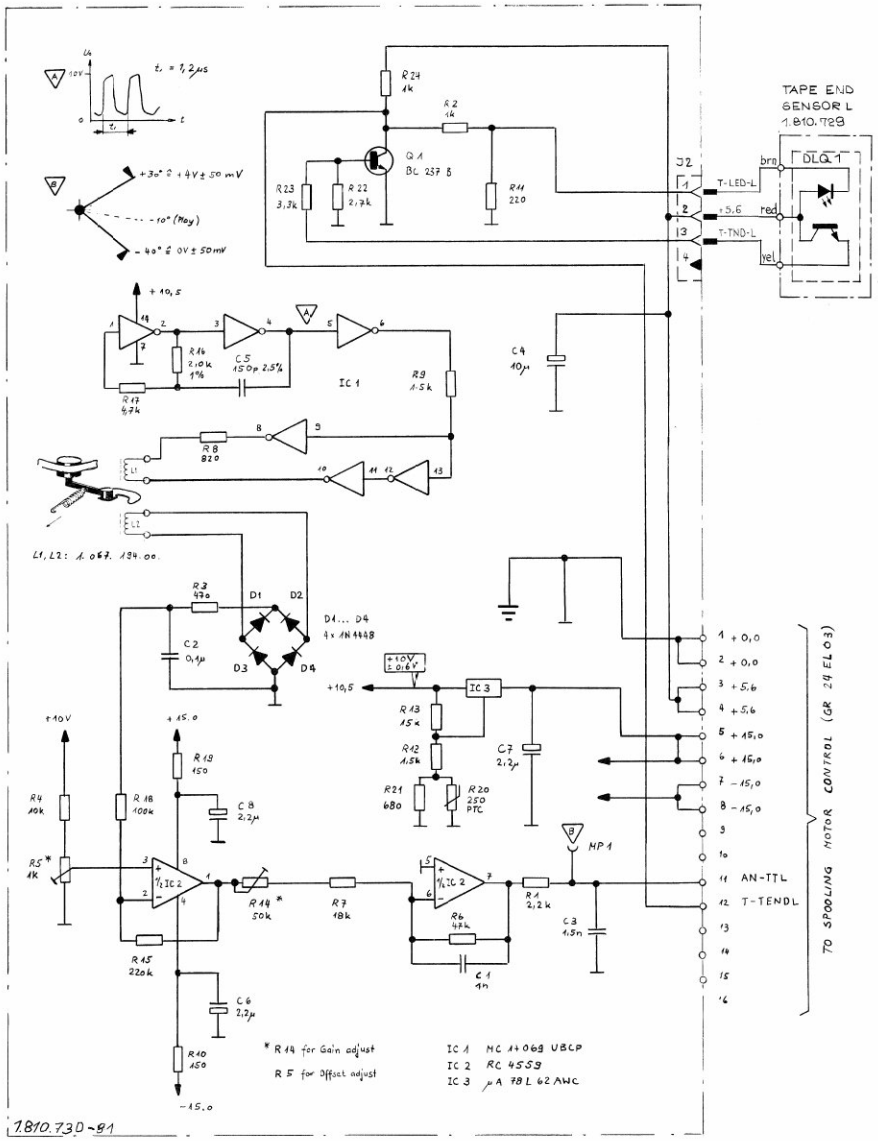

TAPE TENSION SENSOR PCB LEFT 1.810.730–82 GR27 "ESE"
TAPE END SENSOR PCB 1.810.729–00 GR27 EL4

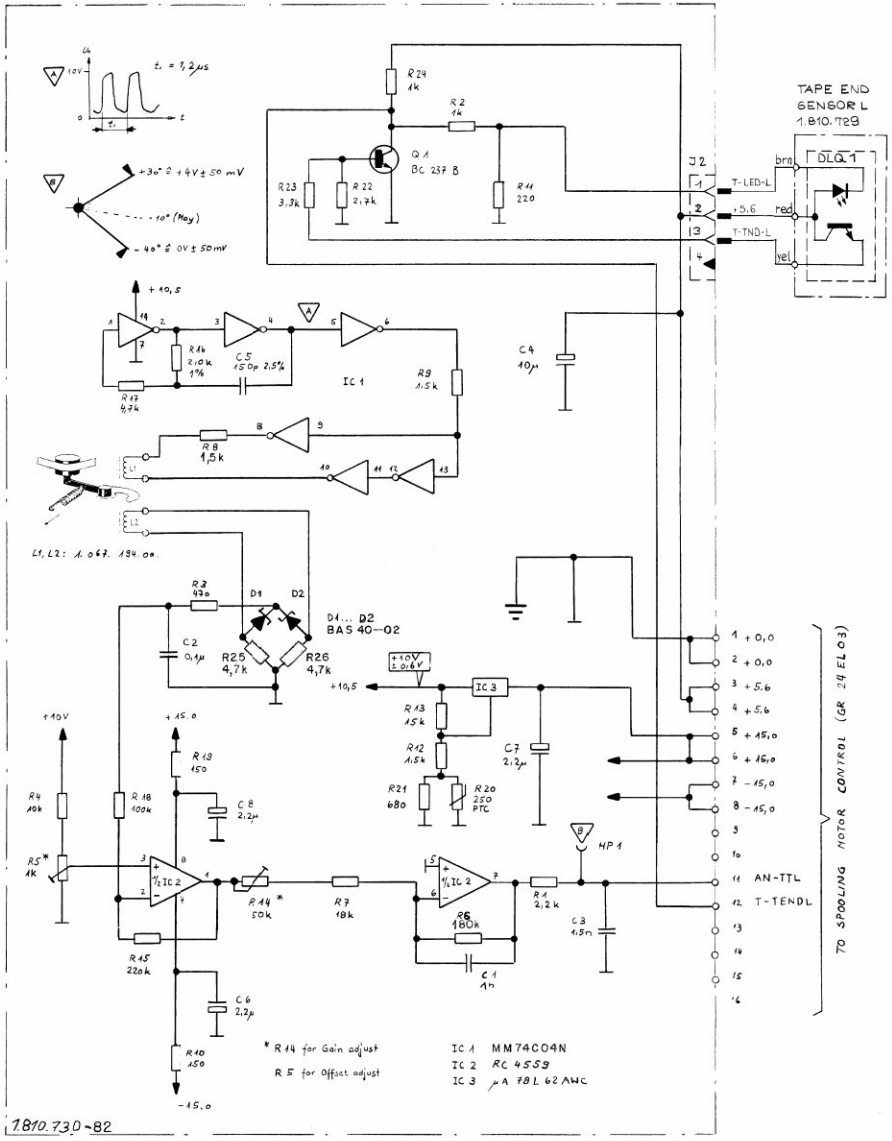

TAPE TENSION SENSOR PCB LEFT 1.810.730–81/–82 GR27 "ESE"

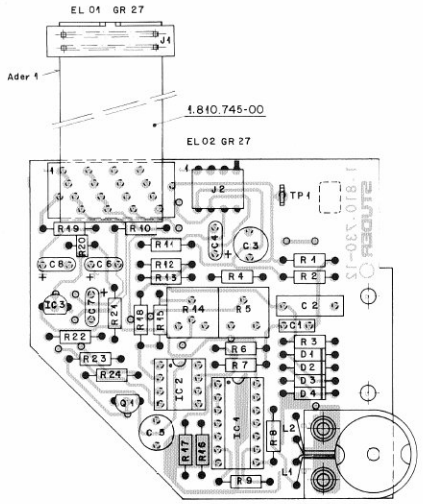

IND.	POS.NO.	PART NO.	VALUE	SPECIFICATIONS / EQUIVALENT	MANUF.
	C.....1	59.06.0102	1 nF	10%	
	C.....2	59.12.2104	100 nF	5%	
	C.....3	59.05.2152	1.5 nF	2.5%, PP	
	C.....4	59.26.2100	10 uF	20%, 16V, Sal	Ph
	C.....5	59.05.2151	150 pF	2.5%, PP	
	C.....6	59.26.5229	2.2 uF	20%, 25V, Sal	Ph
	C.....7	59.26.5229	2.2 uF	20%, 25V, Sal	Ph
	C.....8	59.26.5229	2.2 uF	20%, 25V, Sal	Ph
	D.....1	50.04.0125	1N4448		ITT,Ph,Ses,TI
	D.....2	50.04.0125	1N4448		ITT,Ph,Ses,TI
	D.....3	50.04.0125	1N4448		ITT,Ph,Ses,TI
	D.....4	50.04.0125	1N4448		ITT,Ph,Ses,TI
	IC....1	50.07.1069	4069UBCP	MC14069UBCP,CD4069UBE	Fc,Mot,RCA
	IC....2	50.09.0107	RC4559NB		Ra,TI
	IC....3	50.10.0101	uA78L62ANC	78L06ACS	Fc,Sig
	J.....1	54.01.0304	4 cont.	AMP Nr. 163.683-2	
	J.....2	54.14.5021	16 cont.	See note 1	
	L.....1	1.067.194.00		Sensor coil	St
	L.....2	1.067.194.00		Sensor coil	St
	Q.....1	50.03.0436	BC237B	BC547B, BC550B	ITT,Mot,Ph,Sie,TF
	R.....1	57.11.4222	2.2 kOhm	2%	
	R.....2	57.11.4102	1 kOhm	2%	
	R.....3	57.11.4471	470 Ohm	2%	
	R.....4	57.11.4103	10 kOhm	2%	
	R.....5	58.01.8102	1 kOhm	See note 2	
	R.....6	57.11.4473	47 kOhm	2%	
	R.....7	57.11.4183	18 kOhm	2%	
	R.....8	57.11.4821	820 Ohm	2%	
	R.....9	57.11.4152	1.5 kOhm	2%	
	R....10	57.11.4151	150 Ohm	2%	
	R....11	57.11.4221	220 Ohm	2%	

S T U D E R (00) 82/09/28 PST TAPE TENSION SENSOR LEFT 1.810.730.81 PAGE 1

IND.	POS.NO.	PART NO.	VALUE	SPECIFICATIONS / EQUIVALENT	MANUF.
	R....12	57.11.4152	1.5 kOhm	2%	
	R....13	57.11.4153	15 kOhm	2%	
	R....14	58.01.8503	50 kOhm	See note 3	
	R....15	57.11.4224	220 kOhm	2%	
	R....16	57.11.3202	2.0 kOhm	1%	
	R....17	57.11.4472	4.7 kOhm	2%	
	R....18	57.11.4104	100 kOhm	2%	
	R....19	57.11.4151	150 Ohm	2%	
	R....20	57.99.0216	250 Ohm	PTC Resistor, Philips Nr. 2322 660 91001	
	R....21	57.11.4681	680 Ohm	2%	
	R....22	57.11.4272	2.7 kOhm	2%	
	R....23	57.11.4332	3.3 kOhm	2%	
	R....24	57.11.4102	1 kOhm	2%	
	R....25	57.11.4472	4.7 kOhm	5%	
	R....26	57.11.4102	1 kOhm	2%	

Note 1 - Yamaichi Nr. FAS-16-17, Burndy Nr. FRS-16 BD-4P
Connection cable Studer Nr. 1.810.745.00
Note 2 - Potentiometer, 1 kOhm
Allen Bradley Nr. E ZB 102
Bourns Nr. 3386 F-1-102
Spectrol Nr. 63 M 102 T010
Note 3 - Potentiometer, 50 kOhm
Allen Bradley Nr. E ZB 503
Bourns Nr. 3386 F-1-503
Spectrol Nr. 63 M 503 T010

PP=Polypropylen, Sal=solid aluminium

MANUFACTURER: Fc=Fairchild, ITT=Intermetall, Mot=Motorola, Ph=Philips,
Ra=Raytheon, RCA=Radio Corp. of America, Ses=Sescosem,
Sie=Siemens, Sig=Signetics, St=Studer, Tf=Telefunken,
TI=Texas Instruments

ORIG 82/09/28

S T U D E R (00) 82/09/28 PST TAPE TENSION SENSOR LEFT 1.810.730.81 PAGE 2

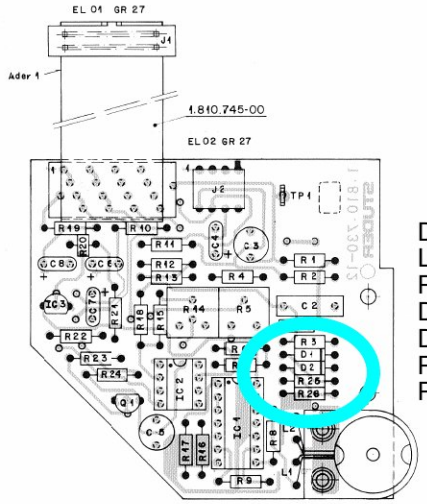

Deze versie heb ik
Let op de
R3
D1
D2
R25
R26

IND.	POS.NO.	PART NO.	VALUE	SPECIFICATIONS / EQUIVALENT	MANUF.
	C.....1	59.06.0102	1 nF	10%	
	C.....2	59.12.6104	100 nF	10%	
	C.....3	59.05.2152	1.5 nF	2.5%, PP	
	C.....4	59.26.2100	10 uF	20%, 16V, Sal	Ph
	C.....5	59.05.2151	150 pF	2.5%, PP	
	C.....6	59.26.5229	2.2 uF	20%, 25V, Sal	Ph
	C.....7	59.26.5229	2.2 uF	20%, 25V, Sal	Ph
	C.....8	59.26.5229	2.2 uF	20%, 25V, Sal	Ph
	D.....1	50.04.0127	BAS 40-02	BAT 85	Sie
	D.....2	50.04.0127	BAS 40-02	BAT 85	Sie
	IC....1	50.99.0167	MM74C04N,	MM74C04N/A+	NS
	IC....2	50.09.0107	RC4559NB		Ra,TI
	IC....3	50.10.0101	uA78L62ANC	78L06ACS	Fc,Sig
	J.....1	54.01.0304	4 cont.	AMP Nr. 163.683-2	
	J.....2	54.14.5021	16 cont.	See note 1	
	L.....1	1.067.194.00		Sensor coil	St
	L.....2	1.067.194.00		Sensor coil	St
	Q.....1	50.03.0436	BC237B	BC547B, BC550B	ITT,Mot,Ph,Sie,TF
	R.....1	57.11.4222	2.2 kOhm	2%	
	R.....2	57.11.4102	1 kOhm	2%	
	R.....3	57.11.4471	470 Ohm	2%	
	R.....4	57.11.4103	10 kOhm	2%	
	R.....5	58.01.8102	1 kOhm	See note 2	
	R.....6	57.11.4184	180 kOhm	2%	
	R.....7	57.11.4183	18 kOhm	2%	
	R.....8	57.11.4152	1.5 kOhm	2%	
	R.....9	57.11.4152	1.5 kOhm	2%	
	R....10	57.11.4151	150 Ohm	2%	
	R....11	57.11.4221	220 Ohm	2%	
	R....12	57.11.4152	1.5 kOhm	2%	
	R....13	57.11.4153	15 kOhm	2%	

S T U D E R (00) 84/01/10 BBT TAPE TENSION SENSOR LEFT 1.810.730.82 PAGE 1

IND.	POS.NO.	PART NO.	VALUE	SPECIFICATIONS / EQUIVALENT	MANUF.
	R....14	58.81.8503	50 kOhm	See note 3	
	R....15	57.11.4224	220 kOhm	2%	
	R....16	57.11.3202	2.0 kOhm	1%	
	R....17	57.11.4472	4.7 kOhm	2%	
	R....18	57.11.4104	100 kOhm	2%	
	R....19	57.11.4151	150 Ohm	2%	
	R....20	57.99.0216	250 Ohm	PTC Resistor, Philips Nr. 2322 660 91001	
	R....21	57.11.4681	680 Ohm	2%	
	R....22	57.11.4272	2.7 kOhm	2%	
	R....23	57.11.4332	3.3 kOhm	2%	
	R....24	57.11.4102	1 kOhm	2%	
	R....25	57.11.4472	4.7 kOhm	5%	
	R....26	57.11.4472	4.7 kOhm	5%	

Note 1 - Yamaichi Nr. FAS-16-17, Burndy Nr. FRS-16 BD-4P
Connection cable Studer Nr. 1.810.745.00
Note 2 - Potentiometer, 1 kOhm
Allen Bradley Nr. E ZB 102
Bourns Nr. 3386 F-1-102
Spectrol Nr. 63 M 102 T010
Note 3 - Potentiometer, 50 kOhm
Allen Bradley Nr. E ZB 503
Bourns Nr. 3386 F-1-503
Spectrol Nr. 63 M 503 T010

PP=Polypropylen, Sal=solid aluminium

MANUFACTURER: Fc=Fairchild, ITT=Intermetall, Mot=Motorola, Ph=Philips,
Ra=Raytheon, RCA=Radio Corp. of America, Ses=Sescosem,
Sie=Siemens, Sig=Signetics, St=Studer, Tf=Telefunken,
TI=Texas Instruments

ORIG 84/01/10

S T U D E R (00) 84/01/10 BBT TAPE TENSION SENSOR LEFT 1.810.730.82 PAGE 2

TAPE END SENSOR PCB 1.810,729–00 GR27 EL4

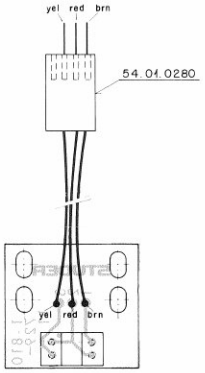

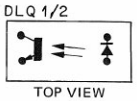

TOP VIEW

IND.	POS.NO.	PART NO.	VALUE	SPECIFICATIONS / EQUIVALENT	MANUF.
	DLQ0001	50.04.2128	OPB804		Op

MANUFACTURER: Op=Optron

ORIG 81/10/14

S T U D E R 81/10/14 DSC TAPE END SENSOR BOARD A810 1.810.729.00 PAGE 1

TAPE TENSION SENSOR PCB RIGHT 1.810.728–81 GR28 "ESE"
TAPE END SENSOR PCB 1.810.729–00 GR28 EL6

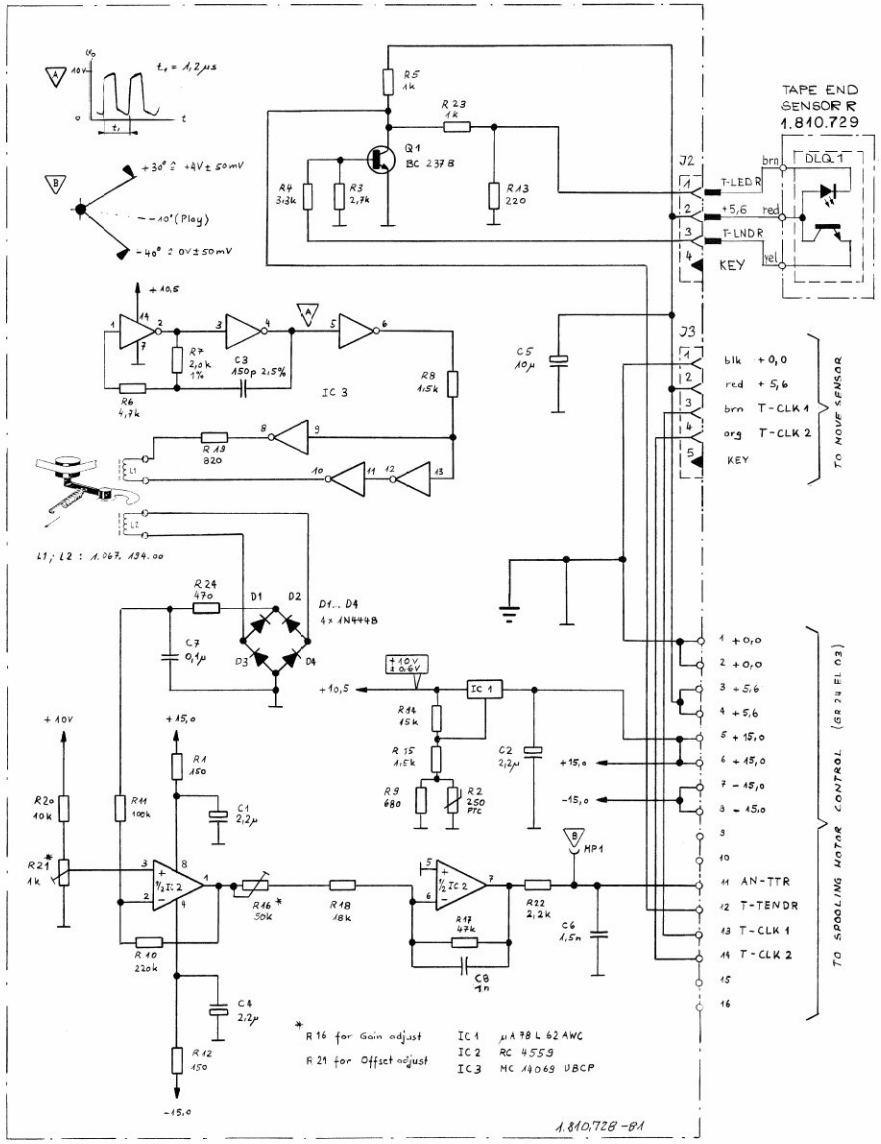

TAPE TENSION SENSOR PCB RIGHT 1.810.728–82 GR28 "ESE"
TAPE END SENSOR PCB 1.810.729–00 GR28 EL6

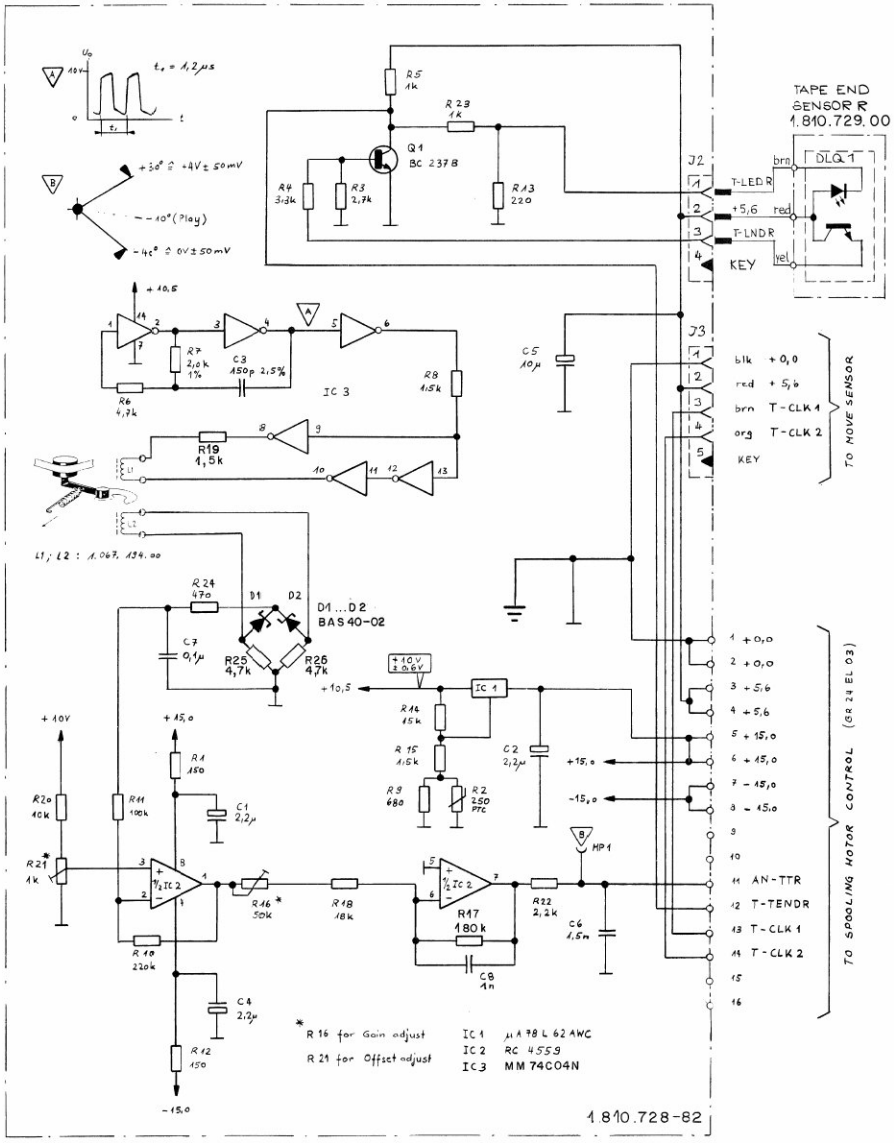

TAPE TENSION SENSOR PCB RIGHT 1.810.728–81/–82 GR28 "ESE"

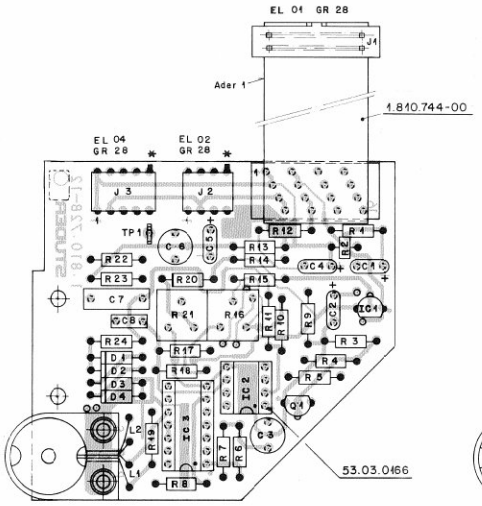

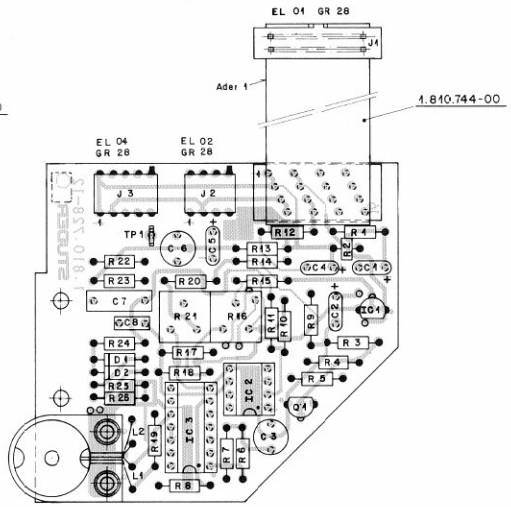

IND.	POS.NO.	PART NO.	VALUE	SPECIFICATIONS / EQUIVALENT	MANUF.
	C..0001	59.26.5229	2.2 uF	20%, 25V, Sal	Ph
	C..0002	59.26.5229	2.2 uF	20%, 25V, Sal	Ph
	C..0003	59.05.2151	150 pF	2.5%, PP	
	C..0004	59.26.5229	2.2 uF	20%, 25V, Sal	Ph
	C..0005	59.26.2100	10 uF	20%, 16V, Sal	Ph
	C..0006	59.05.2152	1.5 nF	2.5%, PP	
	C..0007	59.12.2104	100 nF	5%	
	C..0008	59.06.0102	1 nF	10%	
	D..0001	50.04.0125	.N4148		ITT+Ph+Ses+TI
	D..0002	50.04.0125	.N4148		ITT+Ph+Ses+TI
	D..0003	50.04.0125	.N4148		ITT+Ph+Ses+TI
	D..0004	50.04.0125	.N4148		ITT+Ph+Ses+TI
	IC.0001	50.10.0101	uA78L62AWC	78L06ACS	Fc+Sig
	IC.0002	50.09.0107	RC4559NB		Ra+TI
	IC.0003	50.07.1069	4869UBCP	MC14069UBCP, CD4069UBE	Fc+Mot+RCA
	J..0001	54.14.5021	16 cont.	See note 1	
	J..0002	54.01.0304	4 cont.	AMP Nr. 163.683-2	
	J..0003	54.01.0305	5 cont.	AMP Nr. 163.683-3	
	L..0001	1.067.194.00		Sensor coil	St
	L..0002	1.067.194.00		Sensor coil	St
	Q..0001	50.03.0436	BC237B	BC547B, BC550B	ITT+Mot+Ph+Sie+Tf
	R..0001	57.11.4151	150 Ohm	2%	
	R..0002	57.99.0216	250 Ohm	PTC Resistor, Philips Nr. 2322 650 91001	
	R..0003	57.11.4272	2.7 kOhm	2%	
	R..0004	57.11.4332	3.3 kOhm	2%	
	R..0005	57.11.4102	1 kOhm	2%	
	R..0006	57.11.4472	4.7 kOhm	2%	
	R..0007	57.11.3202	2.0 kOhm	1%	
	R..0008	57.11.4152	1.5 kOhm	2%	
	R..0009	57.11.4681	680 Ohm	2%	
	R..0010	57.11.4224	220 kOhm	2%	
	R..0011	57.11.4104	100 kOhm	2%	
	R..0012	57.11.4151	150 Ohm	2%	
	R..0013	57.11.4221	220 Ohm	2%	
	R..0014	57.11.4153	15 kOhm	2%	
	R..0015	57.11.4152	1.5 kOhm	2%	
	R..0016	58.01.8503	50 kOhm	See note 2	
	R..0017	57.11.4184	180 kOhm	2%	
	R..0018	57.11.4183	18 kOhm	2%	
	R..0019	57.11.4152	1.5 kOhm	2%	
	R..0020	57.11.4103	10 kOhm	2%	
	R..0021	58.01.8102	1 kOhm	See note 3	
	R..0022	57.11.4222	2.2 kOhm	2%	
	R..0023	57.11.4102	1 kOhm	2%	
	R..0024	57.11.4471	470 Ohm	2%	

Note 1 - Yamaichi Nr. FAS-16-17, Burndy Nr. FRS-16 BD-4P
Connection cable Studer Nr. 1.810.744.00
Note 2 - Potentiometer, 50 kOhm
Allen Bradley Nr. E 2B 503
Bourns Nr. 3386 F-1-503
Spectrol Nr. 63 M 503 T010
Note 3 - Potentiometer, 1 kOhm
Allen Bradley Nr. E 2B 102
Bourns Nr. 3386 F-1-102
Spectrol Nr. 63 M 102 T010

PP=Polypropylen, Sal=solid aluminium

MANUFACTURER: Fc=Fairchild, ITT=Intermetall, Mot=Motorola, Ph=Philips,
Ra=Raytheon, RCA=Radio Corp. of America, Ses=Sescosem,
Sie=Siemens, Sig=Sigmetics, St=Studer, Tf=Telefunken,
TI=Texas Instruments

DRIG 82/09/28

S T U D E R 82/09/28 PST TAPE TENSION SENSOR RIGHT 1.810.728.81 PAGE 2

TAPE END SENSOR PCB 1.810.729–00 GR28 EL6

IND.	POS.NO.	PART NO.	VALUE	SPECIFICATIONS / EQUIVALENT	MANUF.
	C..0001	59.26.5229	2.2 uF	20%, 25V, Sal	Ph
	C..0002	59.26.5229	2.2 uF	20%, 25V, Sal	Ph
	C..0003	59.05.2151	150 pF	2.5%, PP	
	C..0004	59.26.5229	2.2 uF	20%, 25V, Sal	Ph
	C..0005	59.26.2100	10 uF	20%, 16V, Sal	Ph
	C..0006	59.05.2152	1.5 nF	2.5%, PP	
	C..0007	59.31.6104	100 nF	10%	
	C..0008	59.06.0102	1 nF	10%	
	D..0001	50.04.0127	BAS 40-02	BAT 85	Sie
	D..0002	50.04.0127	BAS 40-02	BAT 85	Sie
	IC.0001	50.10.0101	uA78L62AWC	78L06ACS	Fc+Sig
	IC.0002	50.09.0107	RC4559NB		Ra+TI
	IC.0003	50.99.0167	MM74C04N,	M74C04N/A+	NS
	J..0001	54.14.5021	16 cont.	See note 1	
	J..0002	54.01.0304	4 cont.	AMP Nr. 163.683-2	
	J..0003	54.01.0305	5 cont.	AMP Nr. 163.683-3	
	L..0001	1.067.194.00		Sensor coil	St
	L..0002	1.067.194.00		Sensor coil	St
	Q..0001	50.03.0436	BC237B	BC547B, BC550B	ITT+Mot+Ph+Sie+Tf
	R..0001	57.11.4151	150 Ohm	2%	
	R..0002	57.99.0216	250 Ohm	PTC Resistor, Philips Nr. 2322 660 91001	
	R..0003	57.11.4272	2.7 kOhm	2%	
	R..0004	57.11.4332	3.3 kOhm	2%	
	R..0005	57.11.4102	1 kOhm	2%	
	R..0006	57.11.4472	4.7 kOhm	2%	
	R..0007	57.11.3202	2.0 kOhm	1%	
	R..0008	57.11.4152	1.5 kOhm	2%	
	R..0009	57.11.4681	680 Ohm	2%	
	R..0010	57.11.4224	220 kOhm	2%	
	R..0011	57.11.4104	100 kOhm	2%	
	R..0012	57.11.4151	150 Ohm	2%	
	R..0013	57.11.4221	220 Ohm	2%	
	R..0014	57.11.4153	15 kOhm	2%	
	R..0015	57.11.4152	1.5 kOhm	2%	
	R..0016	58.01.8503	50 kOhm	See note 2	
	R..0017	57.11.4184	180 kOhm	2%	
	R..0018	57.11.4183	18 kOhm	2%	
	R..0019	57.11.4152	1.5 kOhm	2%	
	R..0020	57.11.4103	10 kOhm	2%	
	R..0021	58.01.8102	1 kOhm	See note 3	
	R..0022	57.11.4222	2.2 kOhm	2%	
	R..0023	57.11.4102	1 kOhm	2%	
	R..0024	57.11.4471	470 Ohm	2%	
	R..0025	57.11.4472	4.7 kOhm	5%	
	R..0026	57.11.4472	4.7 kOhm	5%	

ote 1 - Yamaichi Nr. FAS-16-17, Burndy Nr. FRS-16 BD-4P
Connection cable Studer Nr. 1.810.744.00
Note 2 - Potentiometer, 50 kOhm
Allen Bradley Nr. E 2B 503
Bourns Nr. 3386 F-1-503
Spectrol Nr. 63 M 503 T010
Note 3 - Potentiometer, 1 kOhm
Allen Bradley Nr. E 2B 102
Bourns Nr. 3386 F-1-102
Spectrol Nr. 63 M 102 T010

PP=Polypropylen, Sal=solid aluminium

MANUFACTURER: Fc=Fairchild, ITT=Intermetall, Mot=Motorola, Ph=Philips,
Ra=Raytheon, RCA=Radio Corp. of America, Ses=Sescosem,
Sie=Siemens, Sig=Sigmetics, St=Studer, Tf=Telefunken,
TI=Texas Instruments

DRIG 84/01/10

S T U D E R (00) 84/01/10 BBT TAPE TENSION SENSOR RIGHT 1.810.728.82 PAGE 2

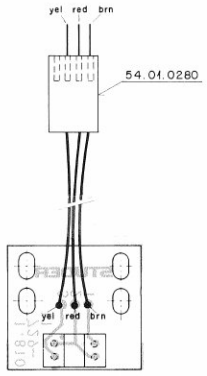

DLQ 1/2

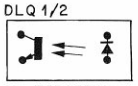

TOP VIEW

IND.	POS.NO.	PART NO.	VALUE	SPECIFICATIONS / EQUIVALENT	MANUF.
	DLQ0001	52.04.2128	OPB804		Op

MANUFACTURER: Op=Optron

DRIG 81/10/14

S T U D E R 81/10/14 DSC TAPE END SENSOR BOARD A810 1.810.729.00 PAGE 1

TAPE MOVE SENSOR PCB 1.810.731–00 GR28 EL5

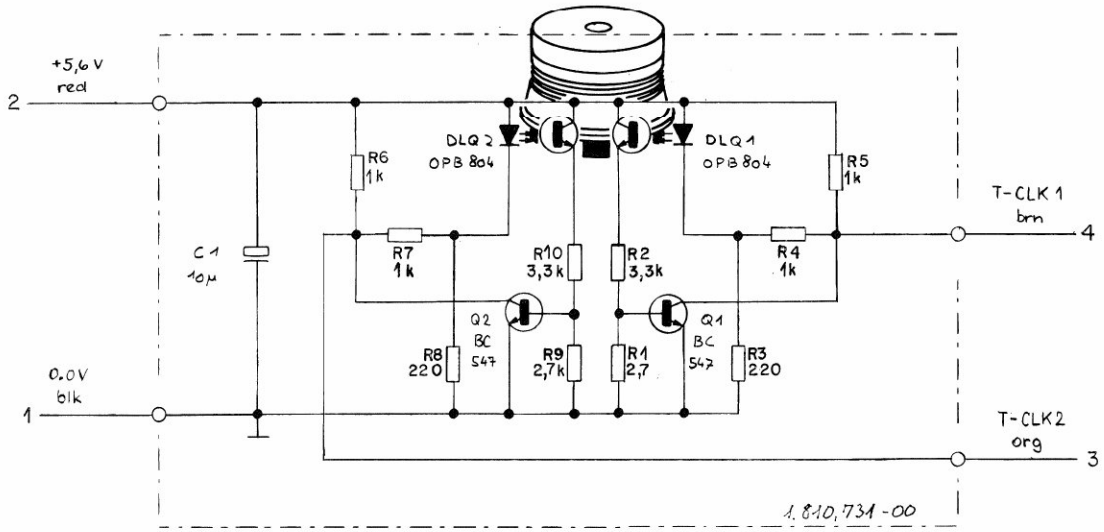

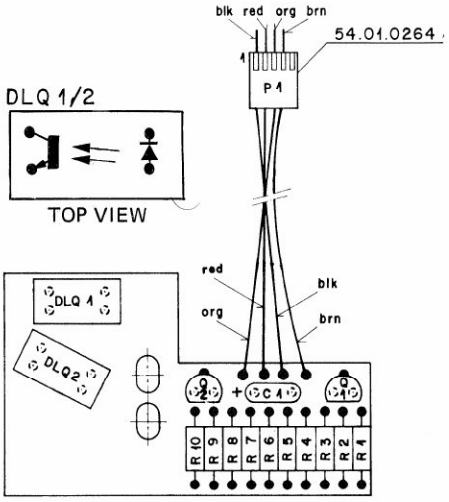

IND.	POS.NO.	PART NO.	VALUE	SPECIFICATIONS / EQUIVALENT	MANUF.
	C.....1	59.26.2100	10 uF	20%, 16V, Sal	Ph
	DLQ...1	50.04.2128	OPB804		Op
	DLQ...2	50.04.2128	OPB804		Op
	P.....1		5 cont.	See note 1	
	Q.....1	50.03.0436	BC237B	BC547B, BC550B	ITT,Mot,Ph,Sie,Tf
	Q.....2	50.03.0436	BC237B	BC547B, BC550B	ITT,Mot,Ph,Sie,Tf
	R.....1	57.11.4272	2.7 kOhm		
	R.....2	57.11.4332	3.3 kOhm		
	R.....3	57.11.4221	220 Ohm		
	R.....4	57.11.4102	1 kOhm		
	R.....5	57.11.4102	1 kOhm		
	R.....6	57.11.4102	1 kOhm		
	R.....7	57.11.4102	1 kOhm		
	R.....8	57.11.4221	220 Ohm		
	R.....9	57.11.4272	2.7 kOhm		
	R....10	57.11.4332	3.3 kOhm		

Note 1 - Contact pin: Studer Nr. 54.01.0225, AMP Nr. 163.618-1
Case: Studer Nr. 54.01.0264, AMP Nr. 163.690-3

Sal=Solid aluminium
MANUFACTURER: ITT=Intermetall, Mot=Motorola, Op=Optron, Ph=Philips,
Sie=Siemens, Tf=Telefunken

ORIG 82/02/23

S T U D E R 82/02/23 DSC MOVE SENSOR BOARD 1.810.731.00 PAGE 1

VARISPEED CONTROL PCB 1.810.762–00 GR42

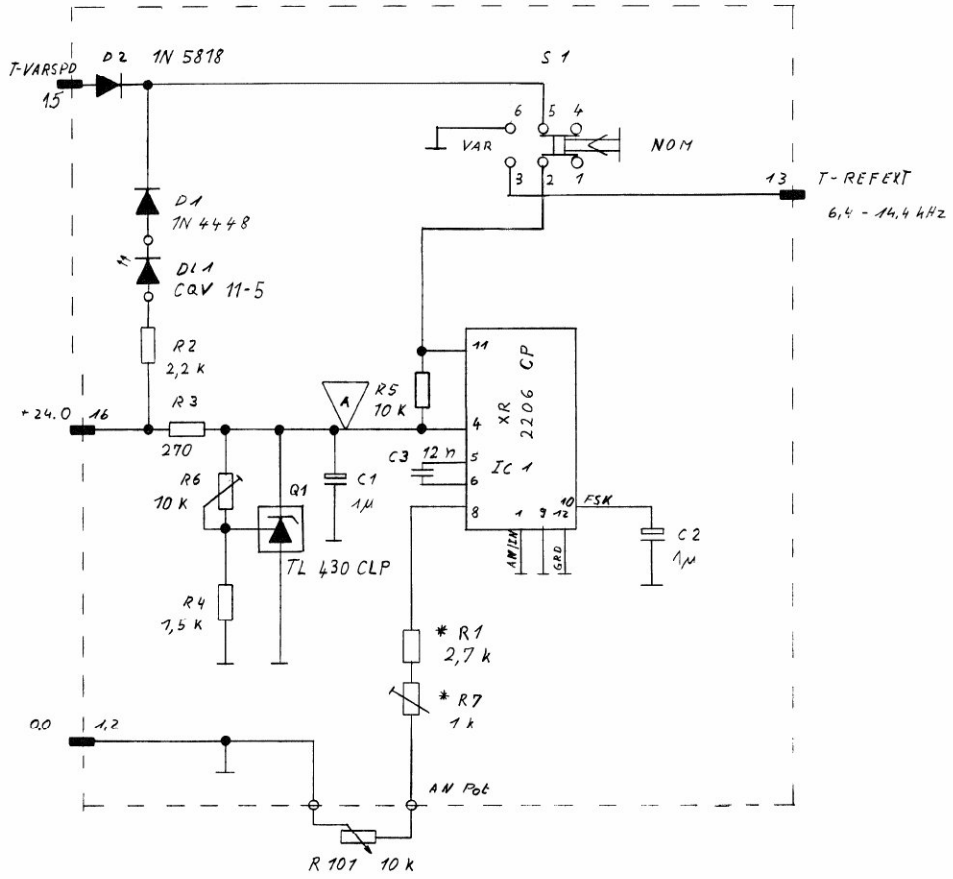

A 15V±0,2V ADJUSTED WITH R6

PIN 13: WITH R101 IN POS. 500 AND
S1 IN POS. VAR, ADJUST OUTPUT
WITH R7 TO 9.6 kHz.

✶ HAS BEEN MODIFIED

VARISPEED CONTROL PCB 1.810.762–00 GR42

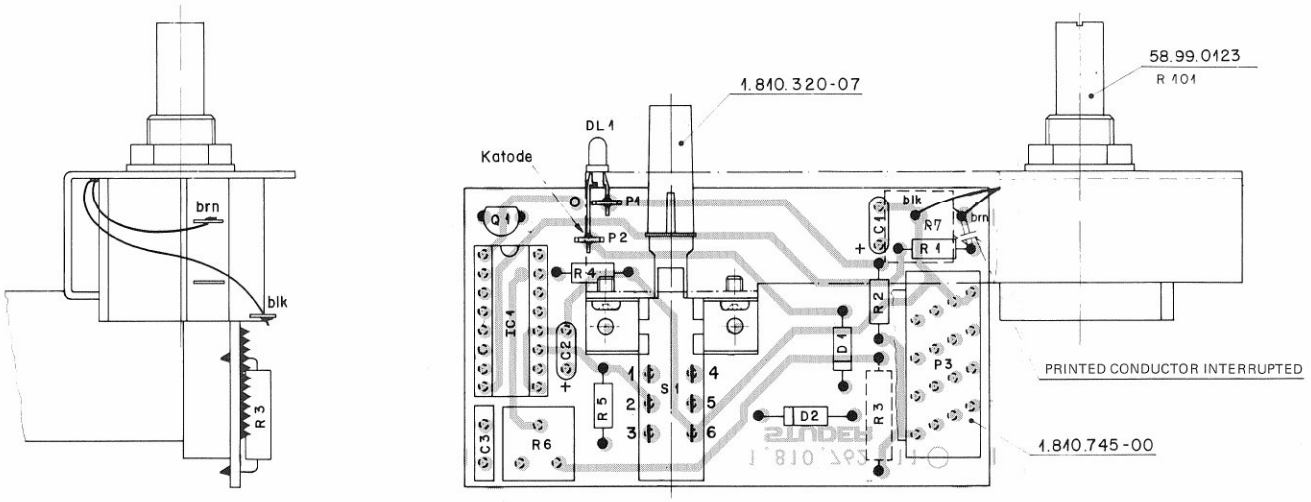

IND.	POS.NO.	PART NO.	VALUE	SPECIFICATIONS / EQUIVALENT	MANUF.
	C..0001	59.26.9109	1 uF	20%, 24V, Sal	Ph
	C..0002	59.26.9109	1 uF	20%, 24V, Sal	Ph
	C..0003	59.99.0220	12 nF	See note 1	
	D..0001	50.04.0125	1N4448		ITT,Ph,Ses,TI
	D..0002	50.04.0512	1N5818	1N5819	Mot
	DL.0001	50.04.2129	CQV11-5	Q62703-Q571	Sie
	IC.0001	50.11.0108	XR2206CP	SG2206	Ex,SG
	J..0001	54.14.5021		See note 2	
	Q..0001	50.10.0106	TL430CLP		TI
(01)	R..0001	57.11.4272	2.7 kOhm	5%	
	R..0002	57.11.4222	2.2 kOhm	5%	
	R..0003	57.13.4271	270 Ohm	5% 5 W	
	R..0004	57.11.4152	1.5 kOhm	5%	
	R..0005	57.11.4103	10 kOhm	5%	
	R..0006	58.01.0103	10 kOhm	See note 4	
(01)	R..0007	58.01.9102	1 kOhm	10%	
	R..0101	58.99.0123	10 kOhm	5% see note 5	
	S..0001	1.177.100.07	Switch	ITT/Schadow Nr. 1 x F 2u S1 EE	

(01) 83/07/02 Improved frequency adjust circuit by inserting R 7 and reducing R 1

Note 1 - Ceramic Capacitor, 5%, Temperature coefficient +-30 ppm
Centralab Nr. CN 40 C 123 J
Siemens Nr. B 37983-J 5123-J
Kemet Nr. C 062 S 123 J 5G 5CA

Note 2 - Yamaichi Nr. FAS-16-17, Burndy Nr. FRS-16 BD-4P
Connection cable Studer Nr. 1.810.745.00

Note 3 - For original version (00) of R 1 only :
Metal-film resistor, 1%, 0.1 W, Temp. coefficient +-25ppm
Philips Nr. 2322 150 41803
Holco Nr. H 10 D 1% 5.11 kOhm

Note 4 - Potentiometer
Allen Bradley Nr. E 2B 103
Bourns Nr. 3386 F-1-103
Spectrol Nr. 63 M 103 T010

Note 5 - Ten turns potentiometer mounted on the front panel

Ce=Ceramic, El Electrolytic, Sal=Solid aluminium

MANUFACTURER: Ex=Exar, ITT=Intermetall, Mot=Motorola, Ph=Philips, Ses=Sescosem, SG=Silicon General, Sie=Siemens, TI=Texas Instruments

ORIG 82/03/16 (01) 83/07/02

VARISPEED CONTROL PCB 1.810.762–81 GR42

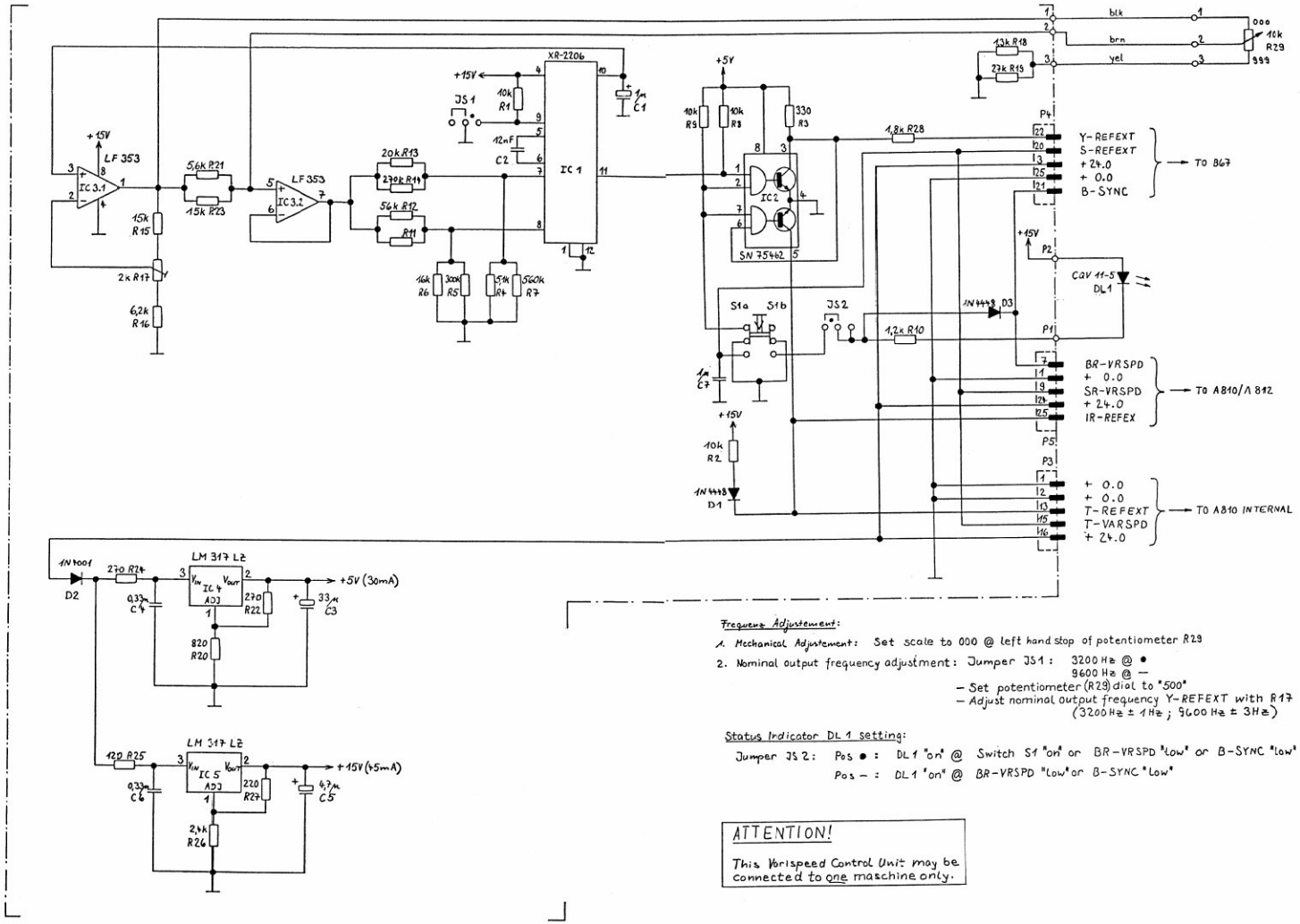

Frequenz Adjustement:

1. Mechanical Adjustement: Set scale to 000 @ left hand stop of potentiometer R29
2. Nominal output frequency adjustment: Jumper JS1: 3200 Hz @ •
   9600 Hz @ –
   – Set potentiometer (R29) dial to "500"
   – Adjust nominal output frequency Y-REFEXT with R17 (3200 Hz ± 1 Hz ; 9600 Hz ± 3 Hz)

Status Indicator DL 1 setting:

Jumper JS 2: Pos • : DL 1 "on" @ Switch S1 "on" or BR-VRSPD "Low" or B-SYNC "Low"
Pos – : DL 1 "on" @ BR-VRSPD "Low" or B-SYNC "Low"

ATTENTION!

This Varispeed Control Unit may be connected to one maschine only.

0 07.02.84 LN	. .	. .	. .	. .
				PAGE 1 OF 1
STUDER	Varispeed Control Board		SC	1.810.762.81

VARISPEED CONTROL PCB 1.810.762–81 GR42

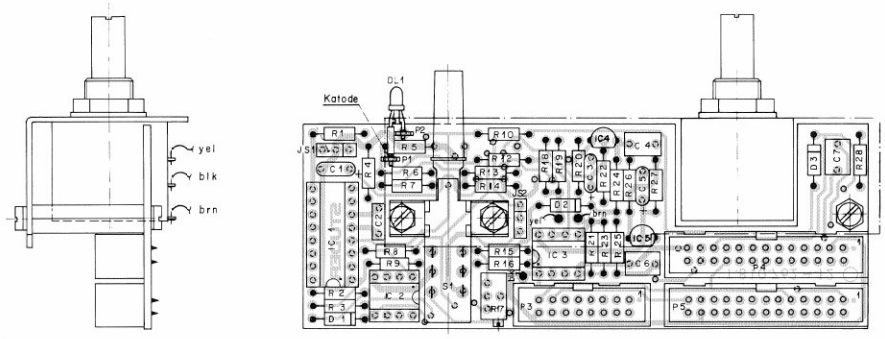

IND.	POS.NO.	PART NO.	VALUE	SPECIFICATIONS / EQUIVALENT		MANUF.
	C..0001	59.26.9109	1 uF	20%, 40V , Sal		Ph
	C..0002	59.99.0220	12 nF	5%, 50V , Cer	see note 1	
	C..0003	59.26.1330	33 uF	20%, 10V , Sal		Ph
	C..0004	59.06.0334	0.33uF	10%, 63V , Petp		
	C..0005	59.26.5479	4.7 uF	20%, 25V , Sal		Ph
	C..0006	59.06.0334	0.33uF	10%, 63V , Petp		
	C..0007	59.06.5105	1uF	10%, 50V , Petp		
	D..0001	50.04.0125	1N 4448			Ph,Ses,ITT,Fc,Tf
	D..0002	50.04.0122	1N 4001			Mot,Gi,Sol
	D..0003	50.04.0125	1N 4448			Ph,Ses,ITT,Fc,Tf
	DL.0001	50.04.2129	CQV11-7			Sie
	IC.0001	50.11.0108	XR2206CP	SG 2206		Ex
	IC.0002	50.05.0227	SN75462P			TI
	IC.0003	50.09.0101	LF 353N	TL 072CP		TI,NS,Mot
	IC.0004	50.10.0108	LP317LZ			Nat,Mot
	IC.0005	50.10.0108	LM317LZ			Nat,Mot
	JS.0001	54.01.0020	Pin (3P)	54.01.0021 Bridge (1P) see note 2		
	JS.0002	54.01.0020	Pin (3P)	54.01.0021 Bridge (1P) see note 2		
	P..0001	54.02.0320		2.890.8		
	P..0002	54.02.0320		2.890.8		
	P..0003	54.14.2002		16-contacts	see note 3	
	P..0004	54.14.2003		26-contacts	see note 4	
	P..0005	54.14.2003		26-contacts	see note 4	
	R..0001	57.11.4103	10 kOhm	5%		
	R..0002	57.11.4103	10 kOhm	5%		
	R..0003	57.11.4331	330 Ohm	5%		
	R..0004	57.11.3512	5.1 kOhm	1%		
	R..0005	57.11.3304	300 kOhm	5%		
	R..0006	57.11.3163	16 kOhm	1%		
	R..0007	57.11.4564	560 kOhm	5%		
	R..0008	57.11.4103	10 kOhm	5%		

IND.	POS.NO.	PART NO.	VALUE	SPECIFICATIONS / EQUIVALENT		MANUF.
	R..0009	57.11.4103	10 kOhm	5%		
	R..0010	57.11.4122	1.2 kOhm	5%		
	R..0011		not used			
	R..0012	57.11.3563	56 kOhm	1%		
	R..0013	57.11.3203	20 kOhm	1%		
	R..0014	57.11.4274	270 kOhm	5%		
	R..0015	57.11.3153	15 kOhm	5%		
	R..0016	57.11.3622	6.2 kOhm	5%		
	R..0017	58.85.0202	2 kOhm		25 turns	
	R..0018	57.11.3132	1.3 kOhm	1%		
	R..0019	57.11.4273	27 kOhm	5%		
	R..0020	57.11.3821	820 Ohm	1%		
	R..0021	57.11.3562	5.6 kOhm	1%		
	R..0022	57.11.3271	270 Ohm	1%		
	R..0023	57.11.3153	15 kOhm	1%		
	R..0024	57.11.3271	270 Ohm	5%		
	R..0025	57.11.4121	120 Ohm	5%		
	R..0026	57.11.3242	2.4 kOhm	1%		
	R..0027	57.11.3221	220 Ohm	1%		
	R..0028	57.11.4182	1.8 kOhm	5%		
	R..0029	58.99.0123	10 kOhm		10 turns	
	S..0001	1.177.100.07		Switch		St

IND.	POS.NO.	PART NO.	VALUE	SPECIFICATIONS / EQUIVALENT	MANUF.
	Note 1: 12nF,50V:	Centrafab Nr.	CN 40 C 123 J		
		Siemens Nr.	B 37 983 - J - 5123 - J		
		Kemet Nr.	C 062 S 123 J 5 G 5 CA		
	Note 2: Contact pin:	Berg Nr.	75160-102-36		
		Philips Nr.	2422 025 89303		
	Bridge:	Berg Nr.	65474-001		
		AMP Nr.	141767-1		
		Philips Nr.	2422 024 88003		
	Note 3: 16-contacts:	Yamaichi Nr.	FAP-16-08//4		
		Burndy Nr.	BPH 9 B 16 B00 GS		
	Note 4: 26-contacts:	Yamaichi Nr.	FAP-26-08//4		
		Burndy Nr.	BPH 9 B 26 B00 GS		

Manufacturer: Ex=Exar, Fc=Fairchild, Gi=General Instruments,
ITT=Intermetall, Mot=Motorola, Nat=National(Matsushita)
NS=National Semiconductors, Ph=Philips,
Ses=Sescosem, Sie=Siemens, Sol=Solitron,
St=Studer, Tf=Telefunken, TI=Texas Instrument

ORIG 84/03/05

VARISPEED CONTROL PCB 1.810.762-82 GR42 "ESE"

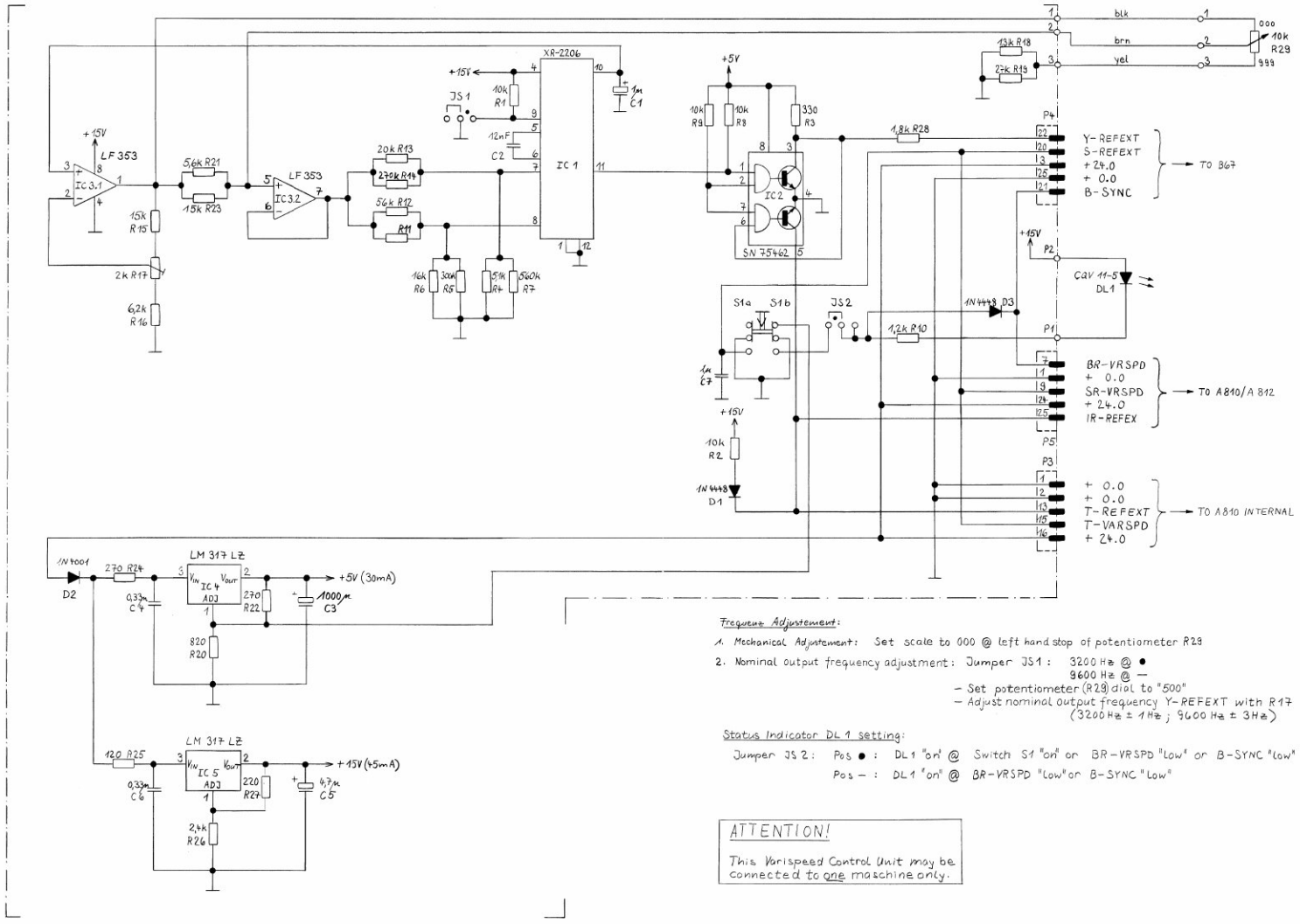

Frequenz Adjustement:

1. Mechanical Adjustement: Set scale to 000 @ left hand stop of potentiometer R29
2. Nominal output frequency adjustment: Jumper JS1: 3200 Hz @ ●
   9600 Hz @ —
   - Set potentiometer (R29) dial to "500"
   - Adjust nominal output frequency Y-REFEXT with R17 (3200 Hz ± 1 Hz ; 9600 Hz ± 3 Hz)

Status Indicator DL 1 setting:

Jumper JS 2: Pos ● : DL 1 "on" @ Switch S1 "on" or BR-VRSPD "Low" or B-SYNC "Low"
Pos — : DL 1 "on" @ BR-VRSPD "Low" or B-SYNC "Low"

ATTENTION!

This Varispeed Control Unit may be connected to one maschine only.

0 09.07.85 LN	. .	. .	. .	. .
				PAGE 1 OF 1
STUDER	Varispeed Control Board		SC	1.810.762.82

VARISPEED CONTROL PCB 1.810.762-82 GR42 "ESE"

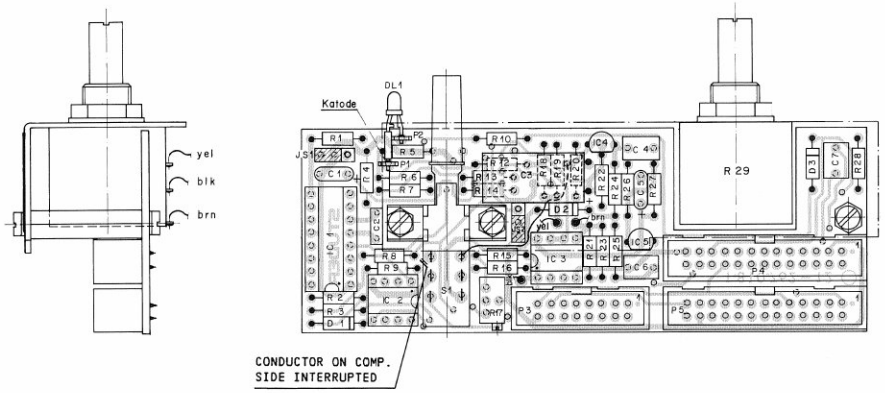

INO.	POS.NO.	PART NO.	VALUE	SPECIFICATIONS / EQUIVALENT	MANUF.
	C..0001	59.26.9109	1 uF	20%, 40V , Sal	Ph
	C..0002	59.99.0220	12 nF	5%, 50V , Cer see note 1	
	C..0003	59.99.1700	1000 uF	6.3V L < 21mm D < 10mm	
	C..0004	59.06.0334	0.33uF	10%, 63V , Petp	
	C..0005	59.26.5479	4.7 uF	20%, 25V , Sal	Ph
	C..0006	59.06.0334	0.33uF	10%, 63V , Petp	
	C..0007	59.06.5105	1uF	10%, 50V , Petp	
	D..0001	50.04.0125	1N 4448		Ph,Ses,ITT,Fc,Tf
	D..0002	50.04.0122	1N 4001		Mot,GI, Sol
	D..0003	50.04.0125	1N 4448		Ph,Ses,ITT,Fc,Tf
	DL.0001	50.04.2129	CQV11-7		Sie
	IC.0001	50.11.0108	XR2206CP	SG 2206	Ex
	IC.0002	50.05.0227	SN75462P		TI
	IC.0003	50.09.0101	LF 353N	TL 072CP	TI,NS,Mot
	IC.0004	50.10.0108	LM317LZ		Nat,Mot
	IC.0005	50.10.0108	LM317LZ		Nat,Mot
	JS.0001	54.01.0020	Pin (3*)	54.01.0021 Bridge (1*) see note 2	
	JS.0002	54.01.0020	Pin (3*)	54.01.0021 Bridge (1*) see note 2	
	P..0001	54.02.0320		2x8*0.8	
	P..0002	54.02.0320		2x8*0.8	
	P..0003	54.14.2002		16-contacts see note 3	
	P..0004	54.14.2003		26-contacts see note 4	
	P..0005	54.14.2003		26-contacts see note 4	
	R..0001	57.11.4103	10 kOhm	5%	
	R..0002	57.11.4103	10 kOhm	5%	
	R..0003	57.11.4331	330 Ohm	5%	
	R..0004	57.11.3512	5.1 kOhm	1%	
	R..0005	57.11.3304	300 kOhm	5%	
	R..0006	57.11.3163	16 kOhm	1%	
	R..0007	57.11.4564	560 kOhm	5%	
	R..0008	57.11.4103	10 kOhm	5%	

S T U D E R (DC) 85/07/09 LN VARISPEED CONTROL BOARD 1.810.762.82 PAGE 1

INO.	POS.NO.	PART NO.	VALUE	SPECIFICATIONS / EQUIVALENT	MANUF.
	R..0009	57.11.4103	10 kOhm	5%	
	R..0010	57.11.4122	1.2 kOhm	5%	
	R..0011		not used		
	R..0012	57.11.3563	56 kOhm	1%	
	R..0013	57.11.3203	20 kOhm	1%	
	R..0014	57.11.4274	270 kOhm	5%	
	R..0015	57.11.3153	15 kOhm	5%	
	R..0016	57.11.3622	6.2 kOhm	5%	
	R..0017	58.05.0202	2 kOhm	25 turns	
	R..0018	57.11.3132	1.3 kOhm	1%	
	R..0019	57.11.4273	27 kOhm	5%	
	R..0020	57.11.3821	820 Ohm	1%	
	R..0021	57.11.3562	5.6 kOhm	1%	
	R..0022	57.11.3271	270 Ohm	1%	
	R..0023	57.11.3153	15 kOhm	1%	
	R..0024	57.11.3271	270 Ohm	5%	
	R..0025	57.11.4121	120 Ohm	5%	
	R..0026	57.11.3242	2.4 kOhm	1%	
	R..0027	57.11.3221	220 Ohm	1%	
	R..0028	57.11.4182	1.8 kOhm	5%	
	R..0029	58.99.0123	10 kOhm	10 turns	
	S..0001	1.177.100.07		Switch	St

S T U D E R (DC) 85/07/09 LN VARISPEED CONTROL BOARD 1.810.762.82 PAGE 2

INO.	POS.NO.	PART NO.	VALUE	SPECIFICATIONS / EQUIVALENT	MANUF.

Note 1: 12nF,50V: Centralab Nr. CN 40 C 123 J
Siemens Nr. B 37 983 - J - 5123 - J
Kemet Nr. C 062 5 123 J 5 G 5 CA

Note 2: Contact pin: Berg Nr. 75160-102-36
Philips Nr. 2422 025 89303
Bridge: Berg Nr. 65474-001
AMP Nr. 141767-1
Philips Nr. 2422 024 88003

Note 3: 16-contacts: Yamaichi Nr. FAP-16-08//4
Burndy Nr. BPH 9 B 16 800 GS

Note 4: 26-contacts: Yamaichi Nr. FAP-26-08//4
Burndy Nr. BPH 9 B 26 800 GS

Manufacturer: Ex=Exar, Fc=Fairchild, GI=General Instruments,
ITT=Intermetall, Mot=Motorola, Nat=National(Matsushita)
NS=National Semiconductors, Ph=Philips,
Ses=Sescosem, Sie=Siemens, Sol=Solitron,
St=Studer, Tf=Telefunken, TI=Texas Instrument

ORIG 85/07/09

S T U D E R (DC) 85/07/09 LN VARISPEED CONTROL BOARD 1.810.762.82 PAGE 3

PUBLISHED: 12/86

VARISPEED CONTROL BOARD 1.810.762.83 GR42

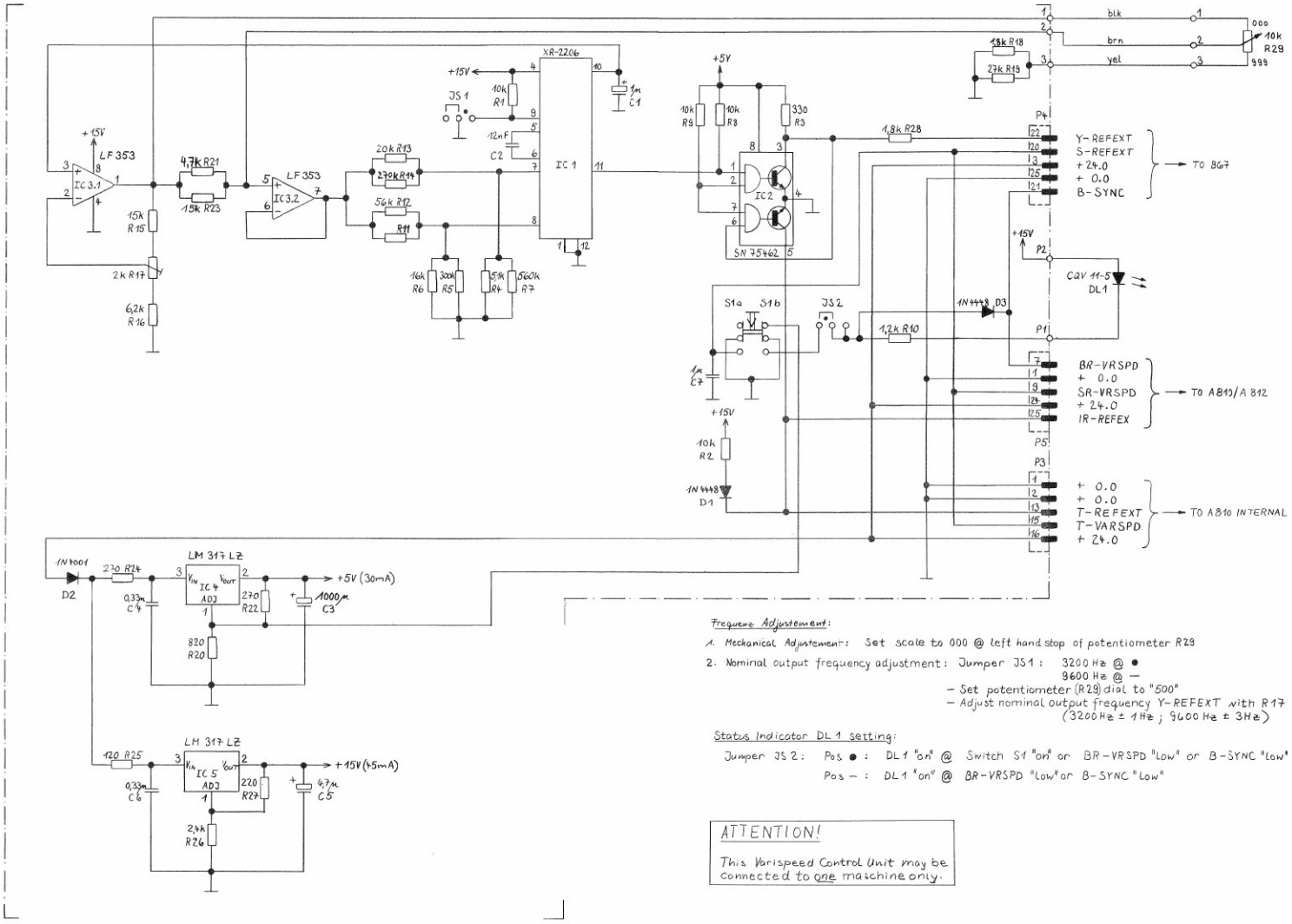

Frequenz Adjustement:

1. Mechanical Adjustement: Set scale to 000 @ left hand stop of potentiometer R29
2. Nominal output frequency adjustment: Jumper JS1: 3200 Hz @ ●
   9600 Hz @ —
   - Set potentiometer (R29) dial to "500"
   - Adjust nominal output frequency Y-REFEXT with R17 (3200 Hz ± 1 Hz ; 9600 Hz ± 3 Hz)

Status Indicator DL 1 setting:

Jumper JS 2: Pos ●: DL 1 "on" @ Switch S1 "on" or BR-VRSPD "Low" or B-SYNC "Low"
Pos —: DL 1 "on" @ BR-VRSPD "Low" or B-SYNC "Low"

ATTENTION!

This Varispeed Control Unit may be connected to one machine only.

0 17.09.90 ZB				PAGE 1 OF 1
STUDER	Varispeed Control Board		SC	1.810.762.83

VARISPEED CONTROL BOARD 1.810.762.83

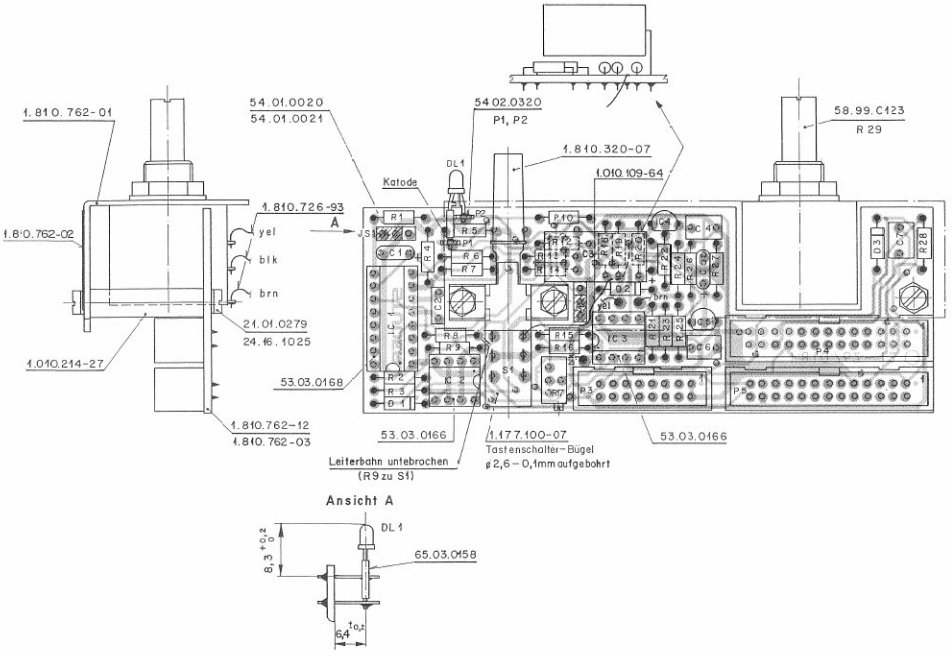

IND.	POS.NO.	PART NO.	VALUE	SPECIFICATIONS / EQUIVALENT	MANUF.
	C.....1	59.26.9109	1 uF	20%, 40V , Sal	Fh
	C.....2	59.99.0220	12 nF	5%, 50V , Cer see note 1	
	C.....3	59.99.1700	1000 uF	6.3V L < 21mm D < 10mm	
	C.....4	59.06.0334	0.33uF	10%, 63V , Fstp	
	C.....5	59.26.9479	4.7 uF	20%, 25V , Sal	Fh
	C.....6	59.06.0334	0.33uF	10%, 63V , Fstp	
	C.....7	59.06.5105	1uF	10%, 50V , Fstp	
	D.....1	50.04.0125	1N 4448		Fh,Sem,ITT,Fc,Tf
	D.....2	50.04.0122	1N 4001		Mot,GI,Sol
	D.....3	50.04.0125	1N 4448		Fh,Sem,ITT,Fc,Tf
	DL....1	50.04.2129	CQV11-7		Sie
	IC....1	50.11.0108	KR2206CP	SG 2206	Ex
	IC....2	50.05.0227	SN75462P		TI
	IC....3	50.09.0101	LF 353N	TL 072CP	TI,NS,Mot
	IC....4	50.10.0108	LM317LZ		Nat,Mot
	IC....5	50.10.0108	LM317LZ		Nat,Mot
	JS....1	54.01.0020	Pin (3*)	54.01.0021 Bridge (1*) see note 2	
	JS....2	54.01.0020	Pin (3*)	54.01.0021 Bridge (1*) see note 2	
	P.....1	54.02.0320		2.840.8	
	P.....2	54.02.0320		2.840.8	
	P.....3	54.14.2102		16-contacts see note 3	
	P.....4	54.14.2003		26-contacts see note 4	
	P.....5	54.14.2003		26-contacts see note 4	
	R.....1	57.11.3103	10 kOhm	5%	
	R.....2	57.11.3103	10 kOhm	5%	
	R.....3	57.11.3331	330 Ohm	5%	
	R.....4	57.11.3512	5.1 kOhm	1%	
	R.....5	57.11.3304	300 kOhm	5%	
	R.....6	57.11.3163	16 kOhm	1%	
	R.....7	57.11.3564	560 kOhm	5%	
	R.....8	57.11.3103	10 kOhm	5%	

IND.	POS.NO.	PART NO.	VALUE	SPECIFICATIONS / EQUIVALENT	MANUF.
	R.....9	57.11.3103	10 kOhm	5%	
	R....10	57.11.3122	1.2 kOhm	5%	
	R....11		not used		
	R....12	57.11.3563	56 kOhm	1%	
	R....13	57.11.3203	20 kOhm	1%	
	R....14	57.11.3274	270 kOhm	5%	
	R....15	57.11.3153	15 kOhm	5%	
	R....16	57.11.3622	6.2 kOhm	5%	
	R....17	58.05.0202	2 kOhm	25 turns	
	R....18	57.11.3182	1.8 kOhm	1%	
	R....19	57.11.3273	27 kOhm	5%	
	R....20	57.11.3821	820 Ohm	1%	
	R....21	57.11.3472	4.7 kOhm	1%	
	R....22	57.11.3271	270 Ohm	1%	
	R....23	57.11.3153	15 kOhm	1%	
	R....24	57.11.3271	270 Ohm	5%	
	R....25	57.11.3121	120 Ohm	5%	
	R....26	57.11.3242	2.4 kOhm	1%	
	R....27	57.11.3221	220 Ohm	1%	
	R....28	57.11.3182	1.8 kOhm	5%	
	R....29	58.99.0123	10 kOhm	10 turns	
	S.....1	1.177.100.07		Switch	St

IND.	POS.NO.	PART NO.	VALUE	SPECIFICATIONS / EQUIVALENT	MANUF.

Note 1: 12nF,50V: Centralab Nr. CK 40 C 123 J
Siemens Nr. B 37 983 - J - 5123 - J
Kemet Nr. C 062 S 123 J 5 G 5 CA

Note 2: Contact pins: Berg Nr. 75160-102-36
Philips Nr. 2422 025 89303
Bridge: Berg Nr. 65474-001
AMP Nr. 141767-1
Philips Nr. 2422 024 88003

Note 3: 16-contacts: Siemens Nr. V23535-A2700-A162
Thomas+Betts 501-1627 ES

Note 4: 26-contacts: Yamaichi Nr. FAP-26-08//4
Burndy Nr. BPH 9 B 26 B00 GS

Manufacturer: Ex=Exar, Fc=Fairchild, GI=General Instruments,
ITT=Intermetall, Mot=Motorola, Nat=National(Matsushita)
NS=National Semiconductors, Ph=Philips,
Sem=Semcosam, Sie=Siemens, Sol=Saltron,
St=Studer, Tf=Telefunken, TI=Texas Instrument

DRI6 90/10/05

BLOCK DIAGRAM CAPSTAN MOTOR CONTROL

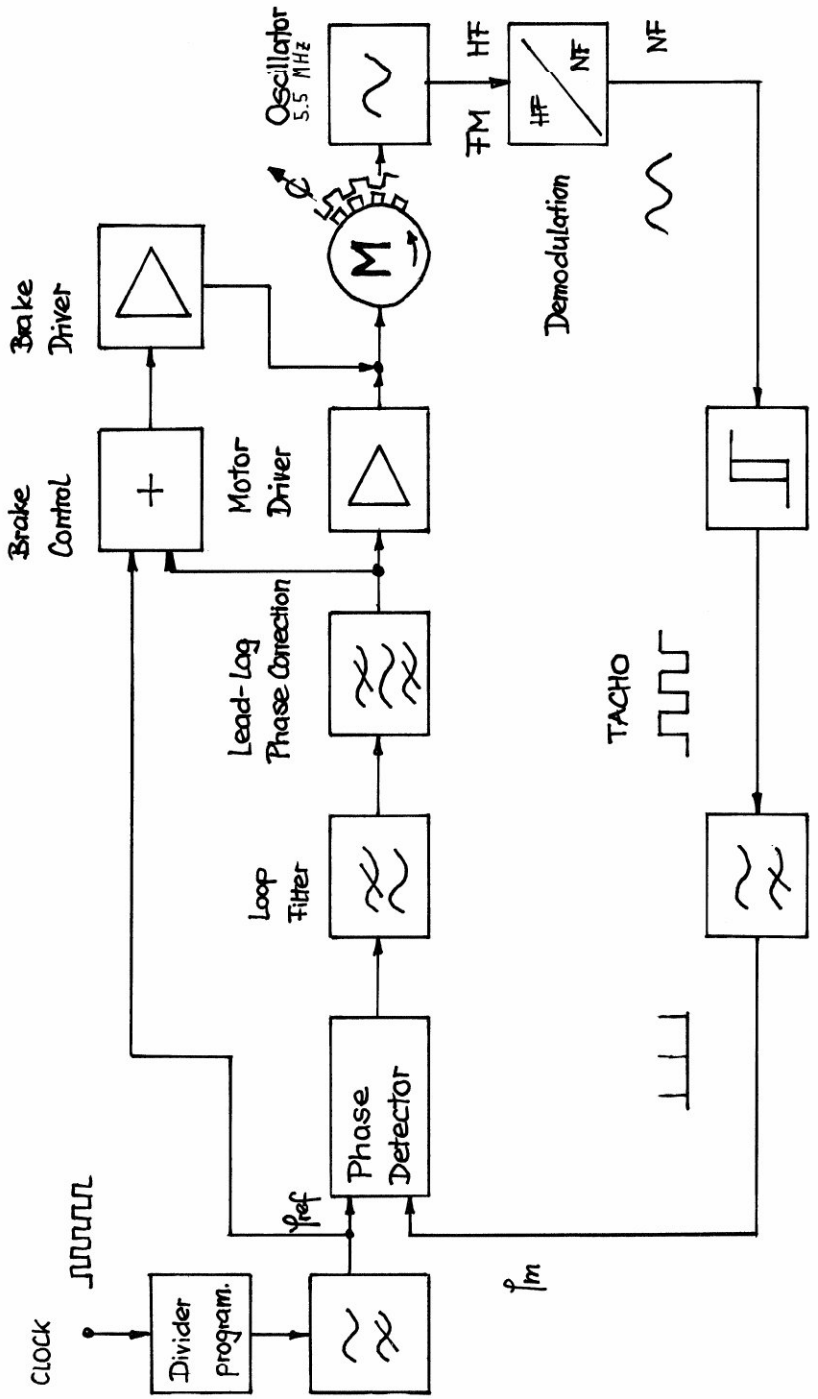

Dec. 82 CS	A 810	Blockdiagram	
STUDER	Capstan Motor Control		PAGE OF

SECTION 7 AUDIO DIAGRAMS

UNIT		PART NUMBER	GR/EL	PAGE
AUDIO BLOCK DIAGRAM				
LINE AMPLIFIER PCB WITH TRANSFORMER	▲	1.820.714-00/-81	20/11,16	7/1
INTERFERENCE FILTER PCB		1.820.749-00	35,36,37	7/4
REPRODUCE AMPLIFIER PCB	▲	1.820.710-00/-81 /-82	20/10,15	7/5
- REPRODUCE PREAMPLIFIER 1CH PCB		1.810.710-00	32/02	7/9
- REPRODUCE PREAMPLIFIER 2CH PCB		1.810.711-00	32/02	7/9
REPRODUCE PREAMPLIFIER 1CH PCB		1.810.710-81	32/02	7/11
- REPRODUCE PREAMPLIFIER 2CH PCB		1.810.711-81	32/02	7/11
RECORD AMPLIFIER PCB	▲	1.820.712-00/-81	20/09,14	7/13
- ADAPTATION PCB		1.820.740-00		7/13
HF DRIVER PCB	▲	1.820.713-00	20/08,13	7/17
MONO/STEREO SWITCH PCB	▲	1.820.720-00	20/12	7/19
- FRONT PANEL PCB		1.820.739-00		7/19
MONO/STEREO SWITCH W. TESTGEN. PCB	▲	1.820.724-00	20/12	7/21
- FRONT PANEL PCB		1.820.739-00		7/21
VU PANEL		1.810.320-81	39,40	7/23
- VU METER AMPLIFIER PCB		1.820.730-00		7/23
- VU METER AMPLIFIER PCB		1.820.730-81		7/23
VU PANEL		1.810.320-81		7/25
- CALIBRATION PCB		1.820.731-00		7/25
- CHANNEL CONTROL PCB		1.820.732-00		7/25
TC CHANNEL CONTROL PCB		1.820.735-00		7/27
MONITOR AMPLIFIER PCB		1.810.722-00	41	7/29
MONITOR AMPLIFIER PCB		1.810.722-81	41	7/29
MONITOR UNIT		1.810.345-81	91	7/31
- MONITOR UNIT PCB		1.810.721-00/-81		7/31
TIME CODE READ/WRITE UNIT PCB	▲	1.820.721-00	20/06	7/33
TIME CODE READ/WRITE UNIT PCB	▲	1.810.724-00	20/06	7/35
TIME CODE TRIGGER PCB		1.810.723-00		7/35
TIME CODE READ/WRITE UNIT PCB	▲	1.820.721-81	20/06	7/39
TIME CODE READ/WRITE UNIT PCB	▲	1.820.721-82	20/06	7/41
TIME CODE DELAY UNIT PCB	▲	1.820.722-00/-81	20/07	7/43

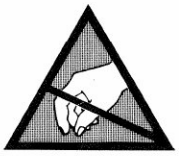

ALL PCBs MARKED WITH THIS SIGN ▲ CONTAIN COMPONENTS SENSITIVE TO STATIC CHARGES.
PLEASE, REFER TO PREFACE BEFORE YOU REMOVE THESE BOARDS.

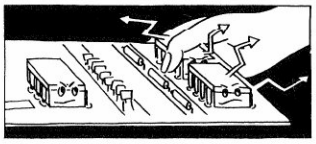

AUDIO BLOCK DIAGRAM

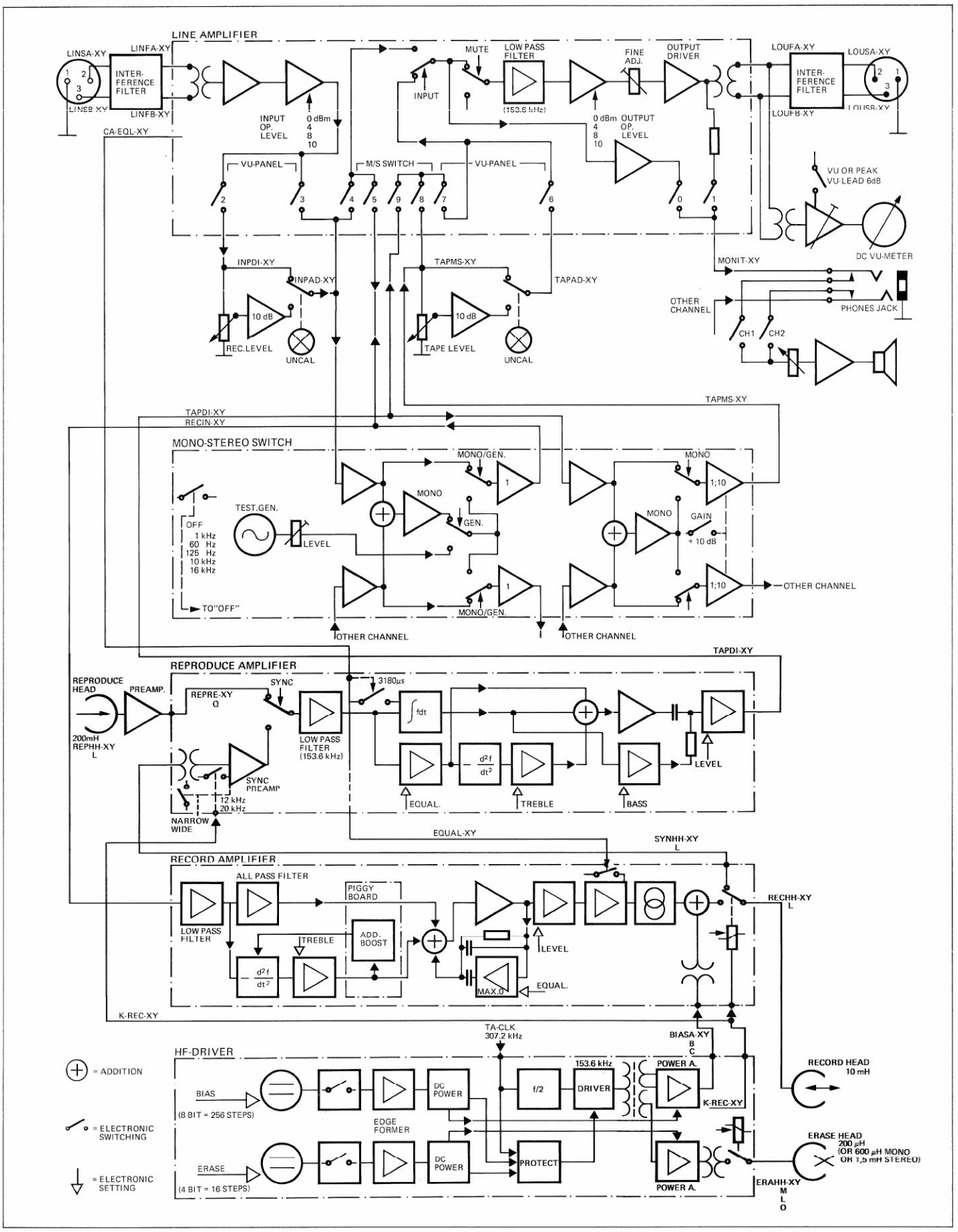

INTERFERENCE FILTER PCB 1.820.749–00 GR35/36/37

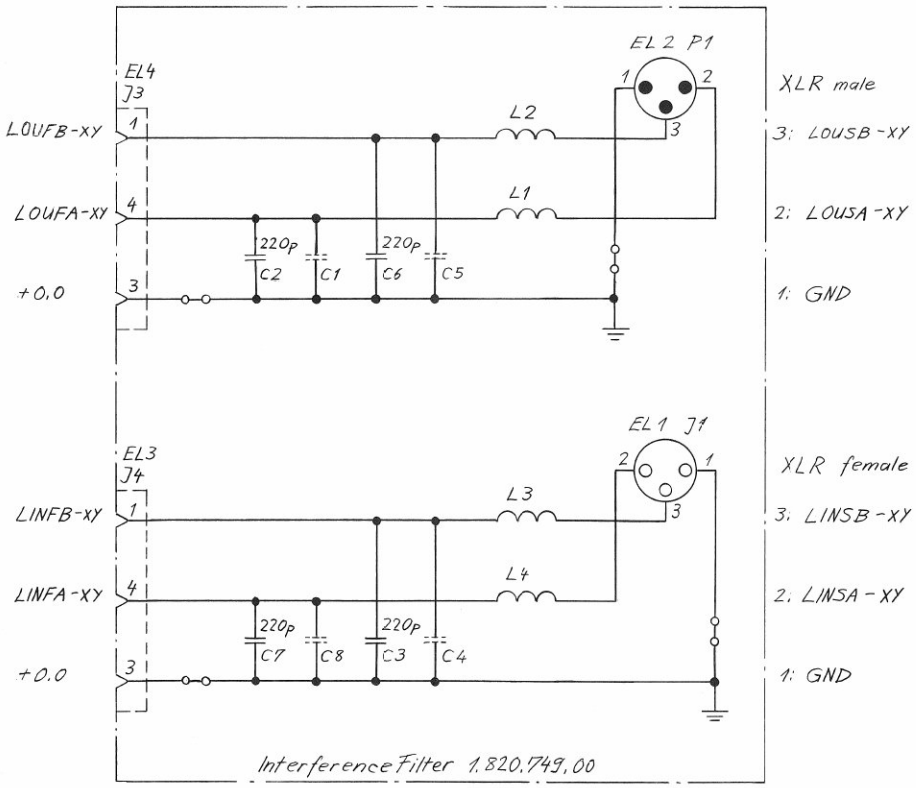

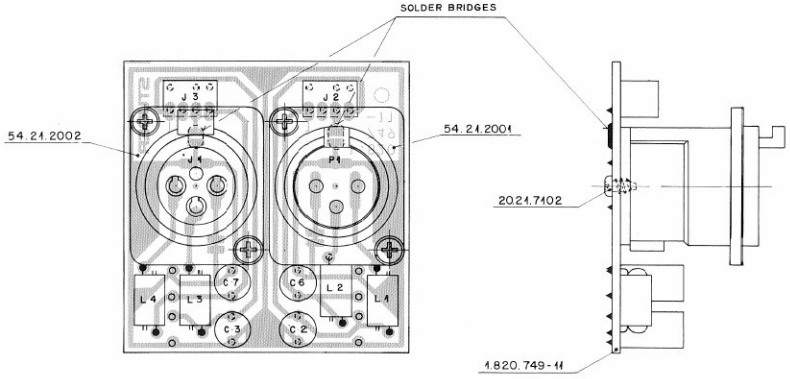

IND.	POS.NO.	PART NO.	VALUE	SPECIFICATIONS / EQUIVALENT	MANUF.
	C...001		not used		
	C...002	59.05.1221	220 pF	630V, PP	ERO,NSF
	C...003	59.05.1221	220 pF	630V, PP	ERO,NSF
	C...004		not used		
	C...005		not used		
	C...006	59.05.1221	220 pF	630V, PP	ERO,NSF
	C...007	59.05.1221	220 pF	630V, PP	ERO,NSF
	C...008		not used		
	J...001	54.21.2002		XLR socket, Neutrik Nr. NC 3FD-V	
	J...003	54.01.0298	4 cont.	AMP Nr. 163.681-2	
	J...004	54.01.0298	4 cont.	AMP Nr. 163.681-2	
	L...001	62.01.0115		Interference-Coil, Philips Nr 4312 020 36703	
	L...002	62.01.0115		Interference-Coil, Philips Nr 4312 020 36703	
	L...003	62.01.0115		Interference-Coil, Philips Nr 4312 020 36703	
	L...004	62.01.0115		Interference-Coil, Philips Nr 4312 020 36703	
	P...001	54.21.2001		XLR plug, Neutrik Nr. NC 3MD-V	

PP=Polypropylen

MANUFACTURER: ERO=E. Roederstein, NSF=AEG-Telefunken-NSF,

ORIG 82/08/03

S T U D E R 82/01/03 GAE INTERFERENCE FILTER 1.820.749.00 PAGE 1

LINE AMPLIFIER PCB WITH TRANSFORMER 1.820.714–00/–81 GR20 EL11/16 "ESE"

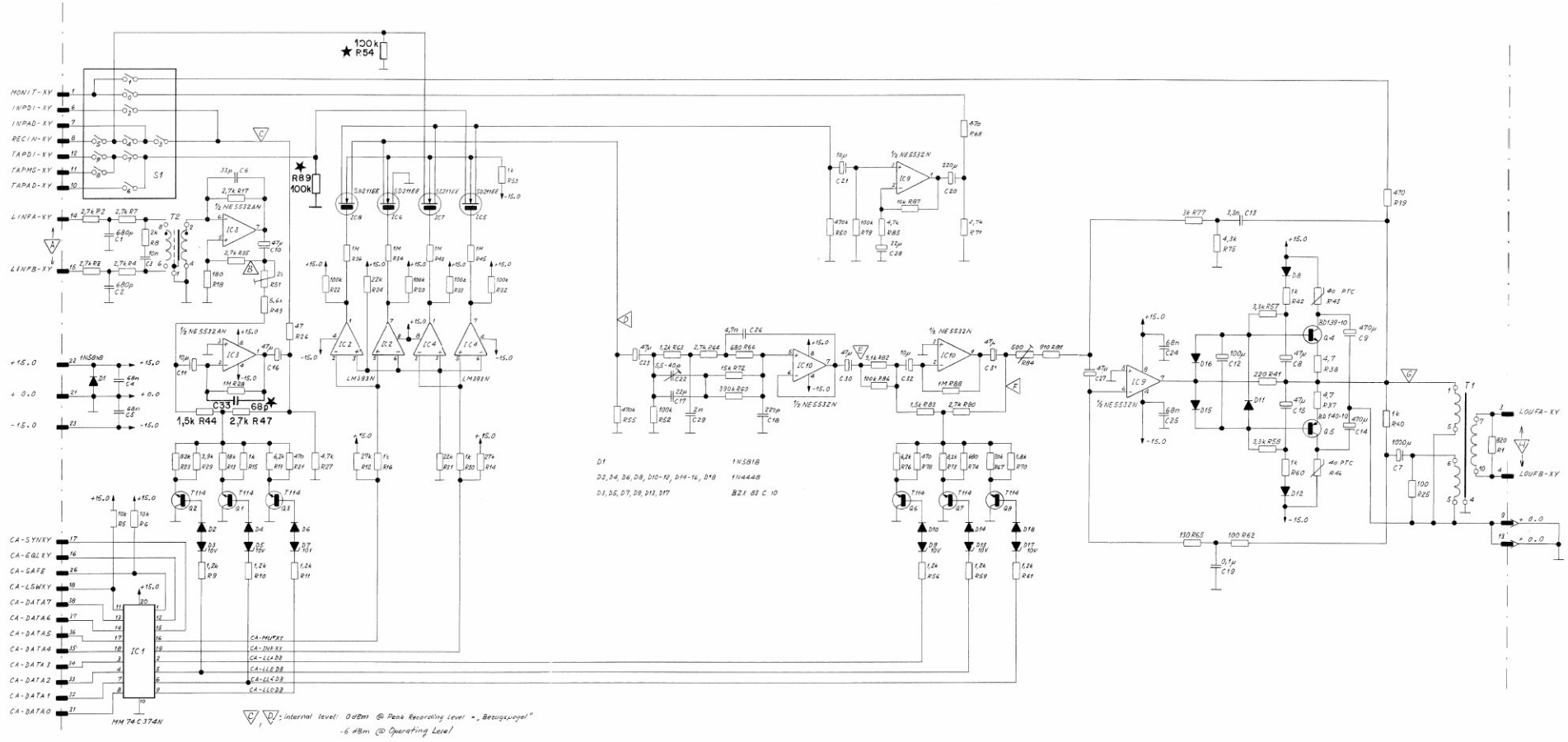

✱ 1.820.714.00 -> .81:
R54: 470k -> 100k
R89: added
C33: added

✱ HAS BEEN MODIFIED FOR 1.820.714–81

LINE AMPLIFIER PCB WITH TRANSFORMER 1.820.714–81 GR20 EL11/16 "ESE"

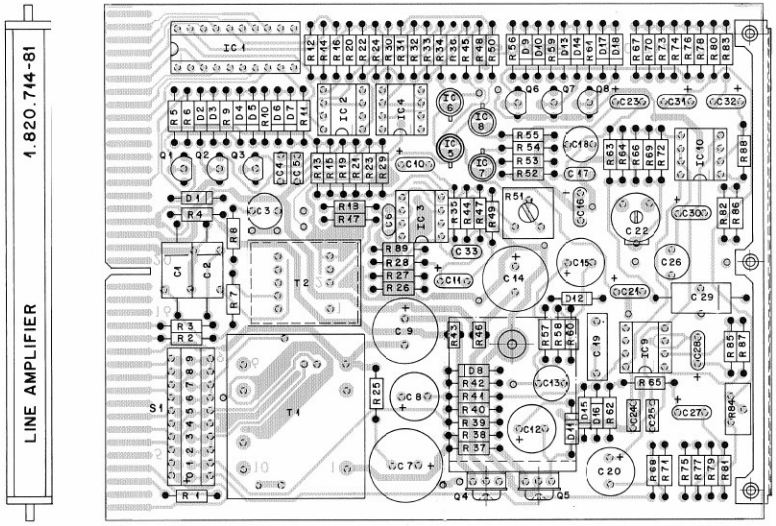

IND.	POS.NO.	PART NO.	VALUE	SPECIFICATIONS / EQUIVALENT	MANUF.
	C..0001	59.12.9681	680 pF	1%	
	C..0002	59.12.9681	680 pF	1%	
	C..0003	59.05.1103	10 nF	5%	
	C..0004	59.99.0205	68 nF	-20%, Ce	
	C..0005	59.99.0205	68 nF	-20%, Ce	
	C..0006	59.34.2330	33 pF	5%, N150, Co	
	C..0007	59.22.2102	1000 uF	-10%, 6V, El	
	C..0008	59.22.6470	47 uF	-10%, 40V, El	
	C..0009	59.22.4471	470 uF	-10%, 16V, El	
	C..0010	59.26.0470	47 uF	20%, 6.3V, Sal	Ph
	C..0011	59.26.2100	10 uF	20%, 16V, Sal	Ph
	C..0012	59.22.3101	100 uF	-10%, 10V, El	
	C..0013	59.05.1332	3300 pF	1%	
	C..0014	59.22.4471	470 uF	-10%, 16V, El	
	C..0015	59.22.6470	47 uF	-10%, 40V, El	
	C..0016	59.26.0470	47 uF	20%, 6.3V, Sal	Ph
	C..0017	59.34.2220	22 pF	5%, N150, Co	
	C..0018	59.05.1221	220 pF	1%	
	C..0019	59.06.5104	0.1 uF	5%	
	C..0020	59.22.2221	220 uF	-10%, 6V, El	
	C..0021	59.26.2100	10 uF	20%, 16V, Sal	Ph
	C..0022	59.18.0108	40 pF	Trimmer capacitor, Philips Nr 2222 808 32409	
	C..0023	59.26.0470	47 uF	20%, 6.3V, Sal	Ph
	C..0024	59.99.0205	68 nF	-20%, Ce	
	C..0025	59.99.0205	68 nF	-20%, Ce	
	C..0026	59.05.1472	4.7 nF	1%	
	C..0027	59.26.0470	47 uF	20%, 6.3V, Sal	Ph
	C..0028	59.26.1220	22 uF	20%, 10V, Sal	Ph
	C..0029	59.12.7202	2 nF	1%	
	C..0030	59.26.0470	47 uF	20%, 6.3V, Sal	Ph
	C..0031	59.26.0470	47 uF	20%, 6.3V, Sal	Ph
	C..0032	59.26.2100	10 uF	20%, 16V, Sal	Ph
	C..0033	59.34.2680	68 pF	5%, N150, Co	
	D..0001	50.04.0512	1N5818		Mot
	D..0002	50.04.0125	1N4448		ITT,Ph,Ses
	D..0003	50.04.1114	10V Z	5%	ITT,Sus

IND.	POS.NO.	PART NO.	VALUE	SPECIFICATIONS / EQUIVALENT	MANUF.
	D..0004	50.04.0125	1N4448		ITT,Ph,Ses
	D..0005	50.04.1114	10V Z	5%	ITT,Sus
	D..0006	50.04.0125	1N4448		ITT,Ph,Ses
	D..0007	50.04.1114	10V Z	5%	ITT,Sus
	D..0008	50.04.0125	1N4448		ITT,Ph,Ses
	D..0009	50.04.1114	10V Z	5%	ITT,Sus
	D..0010	50.04.0125	1N4448		ITT,Ph,Ses
	D..0011	50.04.0125	1N4448		ITT,Ph,Ses
	D..0012	50.04.0125	1N4448		ITT,Ph,Ses
	D..0013	50.04.1114	10V Z	5%	ITT,Sus
	D..0014	50.04.0125	1N4448		ITT,Ph,Ses
	D..0015	50.04.0125	1N4448		ITT,Ph,Ses
	D..0016	50.04.0125	1N4448		ITT,Ph,Ses
	D..0017	50.04.1114	10V Z	5%	ITT,Sus
	D..0018	50.04.0125	1N4448		ITT,Ph,Ses
	IC.0001	50.07.0003	MM74C374N		NS
	IC.0002	50.05.0283	LM393N		TI,NS
	IC.0003	50.09.0106	NE5532AN	XR5532AN, S5532ANB	Sig,Ex,Ra
	IC.0004	50.05.0283	LM393N		TI,NS
	IC.0005	50.11.0106	SD 214 DE	BSD 214	Ph,Six
	IC.0006	50.11.0106	SD 214 DE	BSD 214	Ph,Six
	IC.0007	50.11.0106	SD 214 DE	BSD 214	Ph,Six
	IC.0008	50.11.0106	SD 214 DE	BSD 214	Ph,Six
	IC.0009	50.09.0105	NE5532N	XR5532N, S5532NB	Sig,Ex,Ra
	IC.0010	50.09.0105	NE5532N	XR5532N, S5532NB	Sig,Ex,Ra
	Q..0001	1.010.034.50	T 114 sel	See Note 1	Sie
	Q..0002	1.010.034.50	T 114 sel	See Note 1	Sie
	Q..0003	1.010.034.50	T 114 sel	See Note 1	Sie
	Q..0004	50.03.0451	BD139-10	NPN	Ph,Sie,Tf
	Q..0005	50.03.0452	BD140-10	PNP	Ph,Sie,Tf
	Q..0006	1.010.034.50	T 114 sel	See Note 1	Sie
	Q..0007	1.010.034.50	T 114 sel	See Note 1	Sie
	Q..0008	1.010.034.50	T 114 sel	See Note 1	Sie
	R..0001	57.11.4821	820 Ohm	5%	

IND.	POS.NO.	PART NO.	VALUE	SPECIFICATIONS / EQUIVALENT	MANUF.
	R..0002	57.11.3272	2.7 kOhm	1%	
	R..0003	57.11.3272	2.7 kOhm	1%	
	R..0004	57.11.3272	2.7 kOhm	1%	
	R..0005	57.11.4103	10 kOhm	5%	
	R..0006	57.11.4103	10 kOhm	5%	
	R..0007	57.11.3272	2.7 kOhm	1%	
	R..0008	57.11.3202	2 kOhm	1%	
	R..0009	57.11.4122	1.2 kOhm	5%	
	R..0010	57.11.4122	1.2 kOhm	5%	
	R..0011	57.11.4122	1.2 kOhm	5%	
	R..0012	57.11.4273	27 kOhm	5%	
	R..0013	57.11.4183	18 kOhm	5%	
	R..0014	57.11.4273	27 kOhm	5%	
	R..0015	57.11.4102	1 kOhm	5%	
	R..0016	57.11.4102	1 kOhm	5%	
	R..0017	57.11.4272	2.7 kOhm	5%	
	R..0018	57.11.4181	180 Ohm	5%	
	R..0019	57.11.3622	6.2 kOhm	5%	
	R..0020	57.11.4104	100 kOhm	5%	
	R..0021	57.11.4471	470 Ohm	5%	
	R..0022	57.11.4104	100 kOhm	5%	
	R..0023	57.11.4823	82 kOhm	5%	
	R..0024	57.11.4223	22 kOhm	5%	
	R..0025	57.11.4101	100 Ohm	5%	
	R..0026	57.11.4470	47 Ohm	5%	
	R..0027	57.11.4472	4.7 kOhm	5%	
	R..0028	57.11.4105	1 MOhm	5%	
	R..0029	57.11.4392	3.9 kOhm	5%	
	R..0030	57.11.4102	1 kOhm	5%	
	R..0031	57.11.4223	22 kOhm	5%	
	R..0032	57.11.4104	100 kOhm	5%	
	R..0033	57.11.4104	100 kOhm	5%	
	R..0034	57.11.4105	1 MOhm	5%	
	R..0035	57.11.4272	2.7 kOhm	5%	
	R..0036	57.11.4105	1 MOhm	5%	
	R..0037	57.11.4479	4.7 Ohm	5%	
	R..0038	57.11.4479	4.7 Ohm	5%	

IND.	POS.NO.	PART NO.	VALUE	SPECIFICATIONS / EQUIVALENT	MANUF.
	R..0039	57.11.4471	470 Ohm	5%	
	R..0040	57.11.4102	1 kOhm	5%	
	R..0041	57.11.4221	220 Ohm	5%	
	R..0042	57.11.4102	1 kOhm	5%	
	R..0043	57.99.0211	40 Ohm	See Note 2	
	R..0044	57.11.4152	1.5 kOhm	2%	
	R..0045	57.11.4105	1 MOhm	5%	
	R..0046	57.99.0211	40 Ohm	See Note 2	
	R..0047	57.11.4272	2.7 kOhm	2%	
	R..0048	57.11.4105	1 MOhm	5%	
	R..0049	57.11.4562	5.6 kOhm	5%	
	R..0050	57.11.4474	470 kOhm	5%	
	R..0051	58.01.8202	2 kOhm	See Note 3	
	R..0052	57.11.4104	100 kOhm	5%	
	R..0053	57.11.4102	1 kOhm	5%	
	R..0054	57.11.4104	100 kOhm	5%	
	R..0055	57.11.4474	470 kOhm	5%	
	R..0056	57.11.4122	1.2 kOhm	5%	
	R..0057	57.11.4332	3.3 kOhm	5%	
	R..0058	57.11.4332	3.3 kOhm	5%	
	R..0059	57.11.4122	1.2 kOhm	5%	
	R..0060	57.11.4102	1 kOhm	5%	
	R..0061	57.11.4122	1.2 kOhm	5%	
	R..0062	57.11.4101	100 Ohm	2%	
	R..0063	57.11.4122	1.2 kOhm	2%	
	R..0064	57.11.4272	2.7 kOhm	2%	
	R..0065	57.11.3131	130 Ohm	1%	
	R..0066	57.11.4681	680 Ohm	2%	
	R..0067	57.11.3203	20 kOhm	5%	
	R..0068	57.11.4471	470 Ohm	5%	
	R..0069	57.11.4394	390 kOhm	5%	
	R..0070	57.11.4182	1.8 kOhm	2%	
	R..0071	57.11.4472	4.7 kOhm	5%	
	R..0072	57.11.3153	15 kOhm	1%	
	R..0073	57.11.4822	8.2 kOhm	5%	
	R..0074	57.11.3681	680 Ohm	1%	
	R..0075	57.11.3432	4.3 kOhm	1%	

IND.	POS.NO.	PART NO.	VALUE	SPECIFICATIONS / EQUIVALENT	MANUF.
	R..0076	57.11.3622	6.2 kOhm	5%	
	R..0077	57.11.3302	3 kOhm	1%	
	R..0078	57.11.4471	470 Ohm	2%	
	R..0079	57.11.4104	100 kOhm	5%	
	R..0080	57.11.4272	2.7 kOhm	2%	
	R..0081	57.11.3911	910 Ohm	1%	
	R..0082	57.11.3912	9.1 kOhm	1%	
	R..0083	57.11.4152	1.5 kOhm	2%	
	R..0084	58.01.9501	500 Ohm	See Note 4	
	R..0085	57.11.4472	4.7 kOhm	2%	
	R..0086	57.11.4104	100 kOhm	5%	
	R..0087	57.11.4103	10 kOhm	2%	
	R..0088	57.11.4105	1 MOhm	5%	
	R..0089	57.11.4104	100 kOhm	5%	
	S..1/0-9	55.01.0170		SAE-Nr. 1010-692	
	T..0001	1.022.394.00		Output Transformer	St
	T..0002	1.022.419.00		Input Transformer 1:1	St

Note 1 - T 114 sel. for invers mode (iBC = 3 mA)
VCE < 0.7 mV, iE 0 mA. VCE < 25 mV, iE 4 mA
Note 2 - 40 Ohm PTC-Resistor
Philips Nr. 2322 661 91003
Siemens Nr. Q 63 100-P 390-L3
Note 3 - 2 kOhm Potentiometer lin. 10%
Bourns Nr. 3386 P-1-202
Allen Bradley Nr. 0 2 8 202
Spectrol Nr. 63 M 202 T010
Note 4 - 500 Ohm Potentiometer lin. 10%
Bourns Nr. 3386 X-1-501
VRN Nr. T80- 403 500
Spectrol 63 X 501 T010

Ce=Ceramic, El=Electrolytic, Sal=Solid aluminium

MANUFACTURER: Ex=Exar, ITT=Intermetall, Mot=Motorola,
NS=National Semiconductor, Ph=Philips, Ra=Raytheon,
Ses=Sescosem, Sie=Siemens, Sig=Signetics, Six=Siliconix,
St=Studer, Tf=Telefunken, TI=Texas Instruments.

ORIG 83/05/05

LINE AMPLIFIER WITH TRANSFORMERS 1.820.714-82 GR20 EL11/16 "ESE"

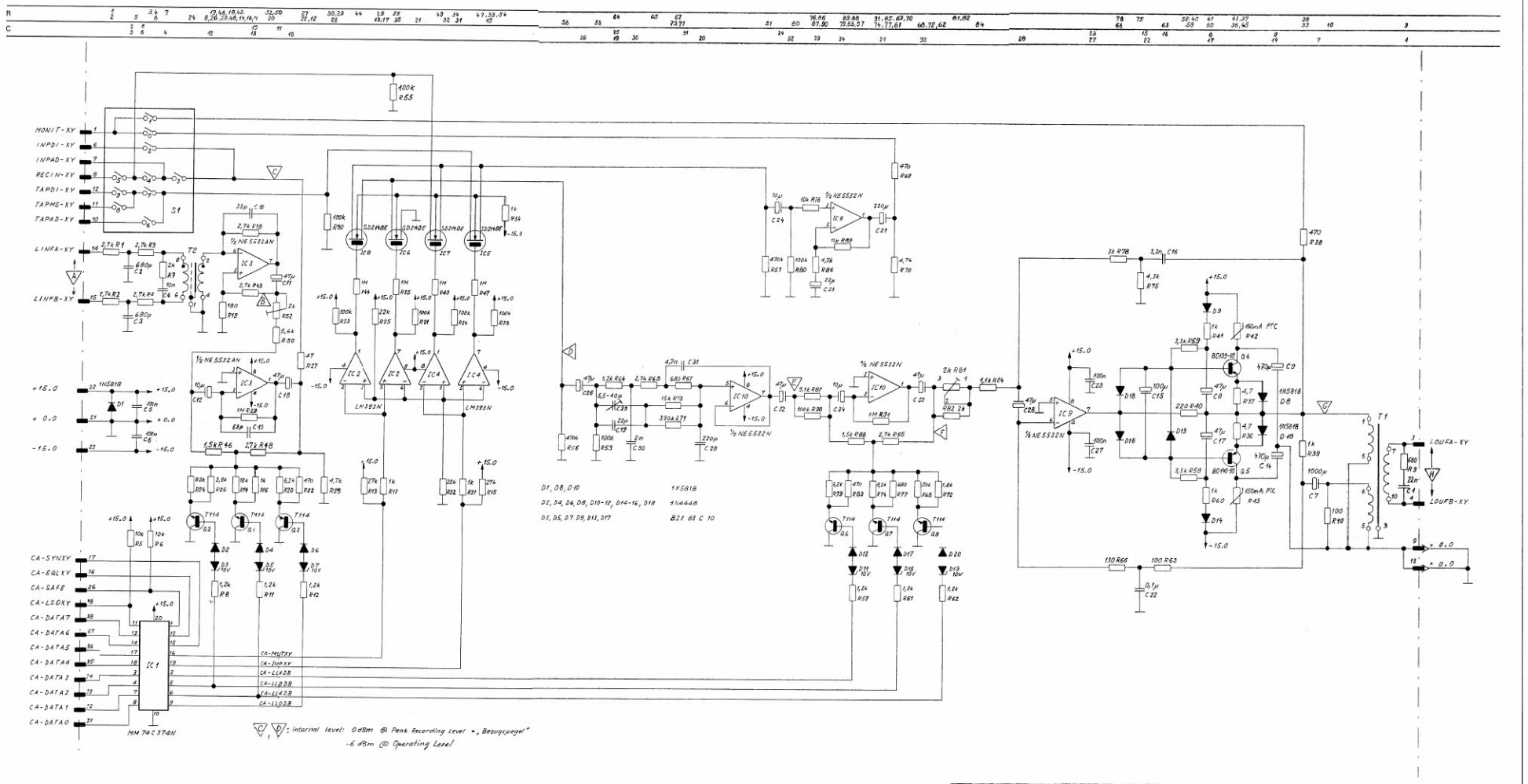

18.01.85	B.Gerull	A 820 / A 810 Audio Section		
STUDER	Line Amplifier	SC	1.820.714-82	PAGE 1 OF 2

18.01.85	B.Gerull	A 820 / A 810 Audio Section		
STUDER	Line Amplifier	SC	1.820.714-82	PAGE 2 OF 2

PUBLISHED: 12/86

LINE AMPLIFIER WITH TRANSFORMERS 1.820.714-82 GR20 EL11/16 "ESE"

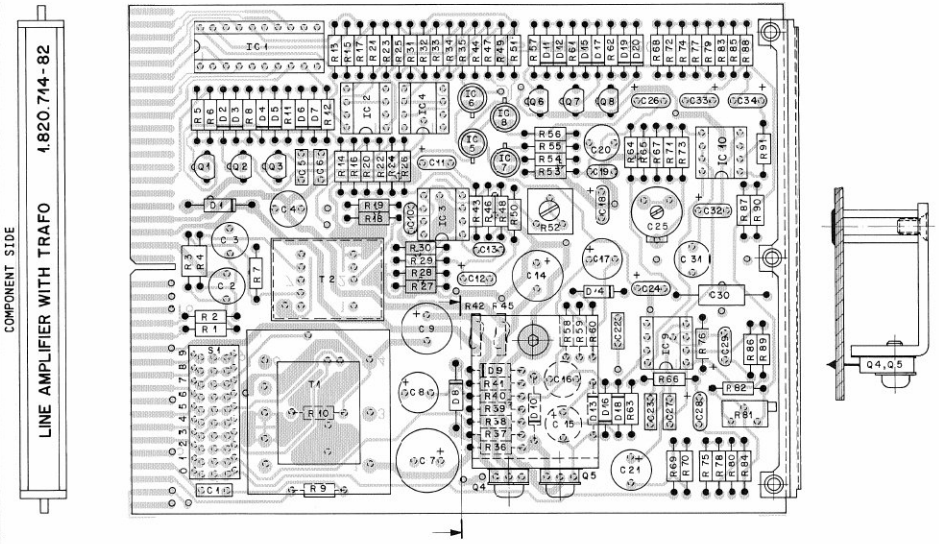

IND.	POS.NO.	PART NO.	VALUE	SPECIFICATIONS / EQUIVALENT	MANUF.
	C..0001	59.06.0223	22 nF	10%	
	C..0002	59.05.1681	680 pF	1%	
	C..0003	59.05.1681	680 pF	1%	
	C..0004	59.05.1103	10 nF	1%	
	C..0005	59.06.0104	100 nF	20%+ PETP	
	C..0006	59.06.0104	100 nF	20%+ PETP	
	C..0007	59.22.2102	1000 uF	-10%+ 4V+ El	
	C..0008	59.22.4470	47 uF	-10%+ 40V+ El	
	C..0009	59.22.4471	470 uF	-10%+ 16V+ El	
	C..0010	59.34.2330	33 pF	1%+ N150+ Ce	
	C..0011	59.26.0470	47 uF	20%+ 6.3V+ Sal	Ph
	C..0012	59.26.2100	10 uF	20%+ 16V+ Sal	Ph
	C..0013	59.34.2680	68 pF	5%+ N150+ Ce	
	C..0014	59.22.4471	470 uF	-10%+ 16V+ El	
	C..0015	59.22.3101	100 uF	-10%+ 18V+ El	
	C..0016	59.05.1332	3300 pF	1%	
	C..0017	59.22.4470	47 uF	-10%+ 40V+ El	
	C..0018	59.26.0470	47 uF	20%+ 6.3V+ Sal	Ph
	C..0019	59.34.2220	22 pF	5%+ N150+ Ce	
	C..0020	59.05.1221	220 pF	1%	
	C..0021	59.22.2221	220 uF	-10%+ 4V+ El	
	C..0022	59.06.5104	0.1 uF	5%	
	C..0023	59.06.0104	100 nF	20%+ PETP	
	C..0024	59.26.2100	10 uF	20%+ 16V+ Sal	Ph
	C..0025	59.18.0108	40 pF	Trimmer capacitor, Philips Nr 2222 808 32409	
	C..0026	59.26.0470	47 uF	20%+ 6.3V+ Sal	Ph
	C..0027	59.06.0104	100 nF	20%+ PETP	
	C..0028	59.26.0470	47 uF	20%+ 6.3V+ Sal	Ph
	C..0029	59.26.1220	22 uF	20%+ 10V+ Sal	Ph
	C..0030	59.12.7202	2 nF	1%	
	C..0031	59.05.4472	4.7 nF	1%	
	C..0032	59.26.0470	47 uF	20%+ 6.3V+ Sal	Ph
	C..0033	59.26.0470	47 uF	20%+ 6.3V+ Sal	Ph
	C..0034	59.26.2100	10 uF	20%+ 16V+ Sal	Ph
	D..0001	50.04.0512	1N5818		Mot
	D..0002	50.04.0125	1N4448		ITT+Ph+Ses

S T U D E R (00) 85/01/18 BBT LINE AMPLIFIER 1.820.714.82 PAGE 1

IND.	POS.NO.	PART NO.	VALUE	SPECIFICATIONS / EQUIVALENT	MANUF.
	D..0003	50.04.1114	10V Z	5%	ITT+Ses
	D..0004	50.04.0125	1N4448		ITT+Ph+Ses
	D..0005	50.04.1114	10V Z	5%	ITT+Ses
	D..0006	50.04.0125	1N4448		ITT+Ph+Ses
	D..0007	50.04.1114	10V Z	5%	ITT+Ses
	D..0008	50.04.0512	1N5818		Mot
	D..0009	50.04.0125	1N4448		ITT+Ph+Ses
	D..0010	50.04.0512	1N5818		Mot
	D..0011	50.04.1114	10V Z	5%	ITT+Ses
	D..0012	50.04.0125	1N4448		ITT+Ph+Ses
	D..0013	50.04.0125	1N4448		ITT+Ph+Ses
	D..0014	50.04.0125	1N4448		ITT+Ph+Ses
	D..0015	50.04.1114	10V Z	5%	ITT+Ses
	D..0016	50.04.0125	1N4448		ITT+Ph+Ses
	D..0017	50.04.0125	1N4448		ITT+Ph+Ses
	D..0018	50.04.0125	1N4448		ITT+Ph+Ses
	D..0019	50.04.1114	10V Z	5%	ITT+Ses
	D..0020	50.04.0125	1N4448		ITT+Ph+Ses
	IC.0001	50.07.0003	MM74C374N		NS
	IC.0002	50.05.0283	LM393N		TI+NS
	IC.0003	50.09.0106	NE5532AN	XR5532AN, 5532ANB	Sig+Ex+Ra
	IC.0004	50.05.0283	LM393N		TI+NS
	IC.0005	50.11.0106	SD 214 DE	BSD 214	Ph+Six
	IC.0006	50.11.0106	SD 214 DE	BSD 214	Ph+Six
	IC.0007	50.11.0106	SD 214 DE	BSD 214	Ph+Six
	IC.0008	50.11.0106	SD 214 DE	BSD 214	Ph+Six
	IC.0009	50.09.0105	NE5532N	XR5532N, 5532NB	Sig+Ex+Ra
	IC.0010	50.09.0105	NE5532N	XR5532N, 5532NB	Sig+Ex+Ra
	Q..0001	1.010.034.50	T 114 sel	See Note 1	Sie
	Q..0002	1.010.034.50	T 114 sel	See Note 1	Sie
	Q..0003	1.010.034.50	T 114 sel	See Note 1	Sie
	Q..0004	50.03.0451	BD139-10	NPN	Ph+Sie+Tf
	Q..0005	50.03.0452	BD140-10	PNP	Ph+Sie+Tf
	Q..0006	1.010.034.50	T 114 sel	See Note 1	Sie
	Q..0007	1.010.034.50	T 114 sel	See Note 1	Sie

S T U D E R (00) 85/01/18 BBT LINE AMPLIFIER 1.820.714.82 PAGE 2

IND.	POS.NO.	PART NO.	VALUE	SPECIFICATIONS / EQUIVALENT	MANUF.
	Q..0008	1.010.034.50	T 114 sel	See Note 1	Sie
	R..0001	57.11.3272	2.7 kOhm	1%	
	R..0002	57.11.3272	2.7 kOhm	1%	
	R..0003	57.11.3272	2.7 kOhm	1%	
	R..0004	57.11.3272	2.7 kOhm	1%	
	R..0005	57.11.4103	10 kOhm	5%	
	R..0006	57.11.4103	10 kOhm	5%	
	R..0007	57.11.3202	2 kOhm	1%	
	R..0008	57.11.4122	1.2 kOhm	5%	
	R..0009	57.11.3681	680 Ohm	1%	
	R..0010	57.11.4101	100 Ohm	5%	
	R..0011	57.11.4122	1.2 kOhm	5%	
	R..0012	57.11.4122	1.2 kOhm	5%	
	R..0013	57.11.4273	27 kOhm	5%	
	R..0014	57.11.4183	18 kOhm	5%	
	R..0015	57.11.4273	27 kOhm	5%	
	R..0016	57.11.4102	1 kOhm	2%	
	R..0017	57.11.4102	1 kOhm	5%	
	R..0018	57.11.4272	2.7 kOhm	2%	
	R..0019	57.11.4181	180 Ohm	2%	
	R..0020	57.11.3622	6.2 kOhm	5%	
	R..0021	57.11.4104	100 kOhm	5%	
	R..0022	57.11.4471	470 Ohm	2%	
	R..0023	57.11.4104	100 kOhm	5%	
	R..0024	57.11.4823	82 kOhm	5%	
	R..0025	57.11.4223	22 kOhm	5%	
	R..0026	57.11.4392	3.9 kOhm	2%	
	R..0027	57.11.4470	47 Ohm	5%	
	R..0028	57.11.4472	4.7 kOhm	5%	
	R..0029	57.11.4105	1 MOhm	5%	
	R..0030	57.11.4104	100 kOhm	5%	
	R..0031	57.11.4102	1 kOhm	5%	
	R..0032	57.11.4223	22 kOhm	5%	
	R..0033	57.11.4104	100 kOhm	5%	
	R..0034	57.11.4104	100 kOhm	5%	
	R..0035	57.11.4105	1 MOhm	5%	

S T U D E R (00) 85/01/18 BBT LINE AMPLIFIER 1.820.714.82 PAGE 3

IND.	POS.NO.	PART NO.	VALUE	SPECIFICATIONS / EQUIVALENT	MANUF.
	R..0036	57.11.4479	4.7 Ohm	5%	
	R..0037	57.11.4479	4.7 Ohm	5%	
	R..0038	57.11.4471	470 Ohm	5%	
	R..0039	57.11.4102	1 kOhm	5%	
	R..0040	57.11.4221	220 Ohm	5%	
	R..0041	57.11.4102	1 kOhm	5%	
	R..0042	57.92.1151	150 mA	See Note 2	
	R..0043	57.11.4272	2.7 kOhm	2%	
	R..0044	57.11.4105	1 MOhm	5%	
	R..0045	57.92.1151	150 mA	See Note 2	
	R..0046	57.11.4152	1.5 kOhm	2%	
	R..0047	57.11.4105	1 MOhm	5%	
	R..0048	57.11.4272	2.7 kOhm	2%	
	R..0049	57.11.4105	1 MOhm	5%	
	R..0050	57.11.4562	5.6 kOhm	5%	
	R..0051	57.11.4474	470 kOhm	5%	
	R..0052	56.01.8202	2 kOhm	See Note 3	
	R..0053	57.11.4104	100 kOhm	5%	
	R..0054	57.11.4102	1 kOhm	5%	
	R..0055	57.11.4104	100 kOhm	5%	
	R..0056	57.11.4474	470 kOhm	5%	
	R..0057	57.11.4122	1.2 kOhm	5%	
	R..0058	57.11.4332	3.3 kOhm	5%	
	R..0059	57.11.4332	3.3 kOhm	5%	
	R..0060	57.11.4102	1 kOhm	5%	
	R..0061	57.11.4122	1.2 kOhm	5%	
	R..0062	57.11.4122	1.2 kOhm	5%	
	R..0063	57.11.4101	100 Ohm	2%	
	R..0064	57.11.4122	1.2 kOhm	2%	
	R..0065	57.11.4272	2.7 kOhm	2%	
	R..0066	57.11.3131	130 Ohm	1%	
	R..0067	57.11.6681	680 Ohm	2%	
	R..0068	57.11.3203	20 kOhm	5%	
	R..0069	57.11.4471	470 Ohm	5%	
	R..0070	57.11.4472	4.7 kOhm	5%	
	R..0071	57.11.4394	390 kOhm	5%	
	R..0072	57.11.4182	1.8 kOhm	2%	

S T U D E R (00) 85/01/18 BBT LINE AMPLIFIER 1.820.714.82 PAGE 4

IND.	POS.NO.	PART NO.	VALUE	SPECIFICATIONS / EQUIVALENT	MANUF.
	R..0073	57.11.3153	15 kOhm	1%	
	R..0074	57.11.4822	8.2 kOhm	5%	
	R..0075	57.11.3432	4.3 kOhm	1%	
	R..0076	57.11.4103	10 kOhm	5%	
	R..0077	57.11.3681	680 Ohm	1%	
	R..0078	57.11.3302	3 kOhm	1%	
	R..0079	57.11.3622	6.2 kOhm	5%	
	R..0080	57.11.4104	100 kOhm	5%	
	R..0081	56.05.8202	2 kOhm	See Note 4	
	R..0082	57.11.3202	2 kOhm	5%	
	R..0083	57.11.4471	470 Ohm	2%	
	R..0084	57.11.3112	1.1 kOhm	5%	
	R..0085	57.11.4272	2.7 kOhm	2%	
	R..0086	57.11.4472	4.7 kOhm	2%	
	R..0087	57.11.3912	9.1 kOhm	1%	
	R..0088	57.11.4152	1.5 kOhm	2%	
	R..0089	57.11.4103	10 kOhm	2%	
	R..0090	57.11.4104	100 kOhm	5%	
	R..0091	57.11.4105	1 MOhm	5%	
	S..1/0-9	55.01.0170		SAE-Nr. 1010-692	
	T..0001	1.022.360.00		Output Transformer	St
	T..0002	1.022.419.00		Input Transformer 1:1	St

S T U D E R (00) 85/01/18 BBT LINE AMPLIFIER 1.820.714.82 PAGE 5

Note 1 - T 114 sel. for invers mode (IBC = 3 mA)
VCE < 0.7 mV, IC 0 mA. VCE < 25 mV, IC 4 mA

Note 2 - 150 mA PTC-Resistor
Philips Nr. 2322 661 11511
PTC-Resistor may be replaced by Fuse-Resistor
57.19.0180, Philips Nr. 2322 205 13189.

Note 3 - 2 kOhm Potentiometer lin., 10%
Bourns Nr. 3386 P-1-202
Allen Bradley Nr. E 2 9 202
Spectrol Nr. 63 M 202 T010

Note 4 - 2 kOhm Potentiometer lin., 10%
Bourns Nr. 3296 Z - 1 - 202
Spectrol Nr. 64 Z 202 T 000
Murata Nr. POT 3105 Z - 1 - 202
Contelec Nr. 183 XZ 202

Ce=Ceramic, El=Electrolytic, Sal=Solid aluminium

MANUFACTURER: Ex=Exar, ITT=Intermetall, Mot=Motorola,
NS=National Semiconductor, Ph=Philips, Ra=Raytheon,
Ses=Sescosem, Sie=Siemens, Sig=Signetics, Six=Siliconix,
St=Studer, Tf=Telefunken, TI=Texas Instruments.

ORIG 85/01/18

S T U D E R (00) 85/01/18 BBT LINE AMPLIFIER 1.820.714.82 PAGE 6

LINE AMPLIFIER WITH TRANSFORMERS 1.820.714-83 GR20 EL11/16 "ESE"

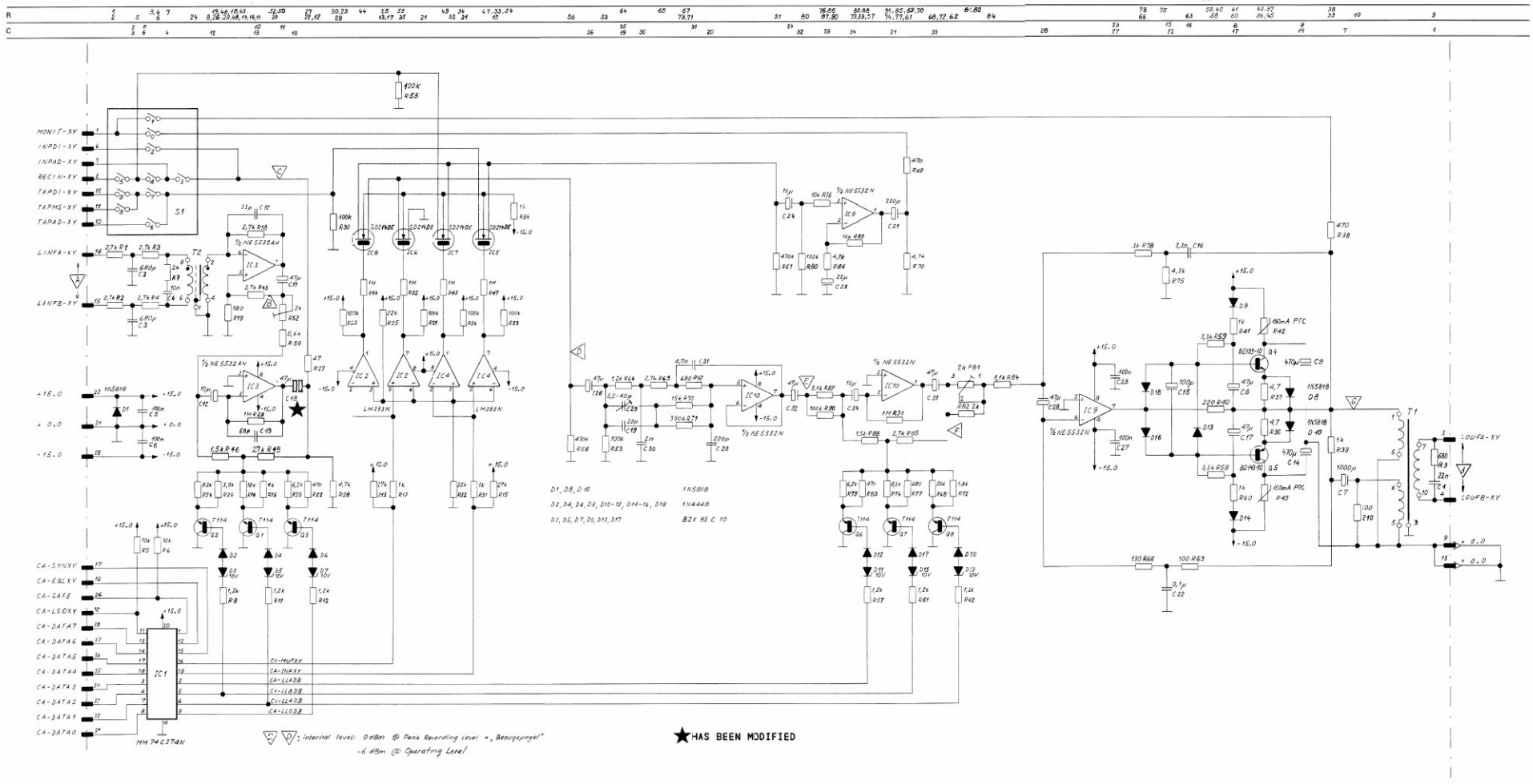

18.01.85	B.Bernd	A 820 / A 810 Audio Section			
STUDER	Line Amplifier	SC	1.820.714-83	PAGE 1 OF 2	

18.01.85	B.Bernd	A 820 / A 810 Audio Section			
STUDER	Line Amplifier	SC	1.820.714-83	PAGE 2 OF 2	

PUBLISHED: 12/86

LINE AMPLIFIER WITH TRANSFORMERS 1.820.714-83 GR20 EL11/16 "ESE"

COMPONENT SIDE

LINE AMPLIFIER WITH TRAFO 1.820.714-83

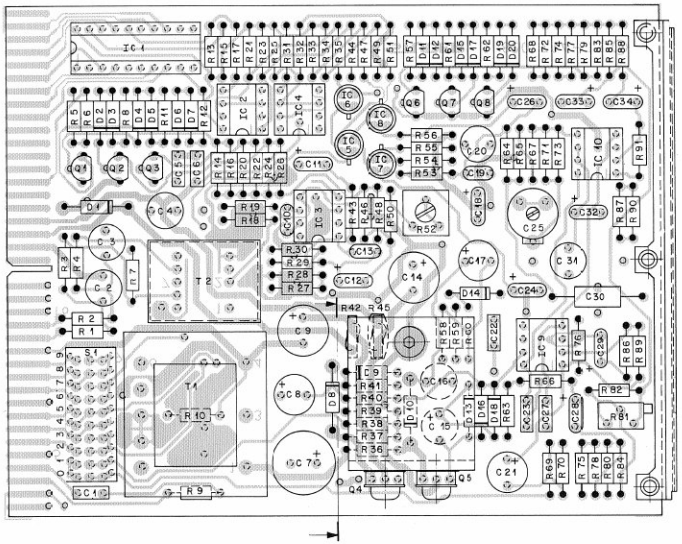

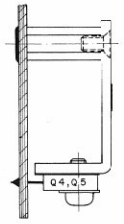

IND.	POS.NO.	PART NO.	VALUE	SPECIFICATIONS / EQUIVALENT	MANUF.
	C..0001	59.06.0223	22 nF	1%	
	C..0002	59.05.1681	680 pF	1%	
	C..0003	59.05.1681	680 pF	1%	
	C..0004	59.05.1103	10 nF	1%	
	C..0005	59.06.0104	100 nF	20%, PETP	
	C..0006	59.06.0104	100 nF	20%, PETP	
	C..0007	59.22.2102	1000 uF	-10%, 40V, El	
	C..0008	59.22.4470	47 uF	-10%, 40V, El	
	C..0009	59.22.4471	470 uF	-10%, 16V, El	
	C..0010	59.34.2330	33 pF	5%, N150, Ce	
	C..0011	59.26.0470	47 uF	20%, 6.3V, Sal	Ph
	C..0012	59.26.2100	10 uF	20%, 16V, Sal	Ph
	C..0013	59.34.2680	68 pF	5%, N150, Ce	
	C..0014	59.22.4471	470 uF	-10%, 16V, El	
	C..0015	59.22.3101	100 uF	-10%, 10V, El	
	C..0016	59.05.1332	3300 pF	1%	
	C..0017	59.22.6470	47 uF	-10%, 40V, El	
(00)	C..0018	59.26.0470	47 uF	20%, 6.3V, Sal	Ph
(01)	C..0018	59.99.0401	47 uF	20%, 16V, El bipolar	
	C..0019	59.34.2220	22 pF	5%, N150, Ce	
	C..0020	59.05.1221	220 pF	1%	
	C..0021	59.22.2221	220 uF	-10%, 40V, El	
	C..0022	59.06.5104	0.1 uF	5%, PETP	
	C..0023	59.06.0104	100 nF	20%, PETP	
	C..0024	59.26.2100	10 uF	20%, 16V, Sal	Ph
	C..0025	59.18.0108	40 pF	Trimmer capacitor, Philips Nr 2222 808 32409	
	C..0026	59.26.0470	47 uF	20%, 6.3V, Sal	Ph
	C..0027	59.06.0104	100 nF	20%, PETP	
	C..0028	59.26.0470	47 uF	20%, 6.3V, Sal	Ph
	C..0029	59.26.1220	22 uF	20%, 10V, Sal	Ph
	C..0030	59.12.7202	2 nF	1%	
	C..0031	59.05.1472	4.7 nF	1%	
	C..0032	59.26.0470	47 uF	20%, 6.3V, Sal	Ph
	C..0033	59.26.0470	47 uF	20%, 6.3V, Sal	Ph
	C..0034	59.26.2100	10 uF	20%, 16V, Sal	Ph
	D..0001	50.04.0512	1N5818		Mot

IND.	POS.NO.	PART NO.	VALUE	SPECIFICATIONS / EQUIVALENT	MANUF.
	D..0002	50.04.3125	1N4448		ITT+Ph+Ses
	D..0003	50.04.1114	10V Z	5%	ITT,Ses
	D..0004	50.04.3125	1N4448		ITT+Ph+Ses
	D..0005	50.04.1114	10V Z	5%	ITT,Ses
	D..0006	50.04.3125	1N4448		ITT+Ph+Ses
	D..0007	50.04.1114	10V Z	5%	ITT,Ses
	D..0008	50.04.3512	1N5818		Mot
	D..0009	50.04.3125	1N4448		ITT+Ph+Ses
	D..0010	50.04.3512	1N5818		Mot
	D..0011	50.04.1114	10V Z	5%	ITT,Ses
	D..0012	50.04.3125	1N4448		ITT+Ph+Ses
	D..0013	50.04.3125	1N4448		ITT+Ph+Ses
	D..0014	50.04.3125	1N4448		ITT+Ph+Ses
	D..0015	50.04.1114	10V Z	5%	ITT,Ses
	D..0016	50.04.3125	1N4448		ITT+Ph+Ses
	D..0017	50.04.3125	1N4448		ITT+Ph+Ses
	D..0018	50.04.3125	1N4448		ITT+Ph+Ses
	D..0019	50.04.1114	10V Z	5%	ITT,Ses
	D..0020	50.04.3125	1N4448		ITT+Ph+Ses
	IC.0001	50.07.3003	MM74C374N		NS
	IC.0002	50.05.2283	LM393N		TI+NS
	IC.0003	50.09.2106	NE5532AN	XR5532AN, 5532ANB	Sig+Ex+Ra
	IC.0004	50.05.3283	LM393N		TI+NS
	IC.0005	50.11.2106	SD 214 DE	BSD 214	Ph+Six
	IC.0006	50.11.3106	SD 214 DE	BSD 214	Ph+Six
	IC.0007	50.11.3106	SD 214 DE	BSD 214	Ph+Six
	IC.0008	50.11.3106	SD 214 DE	BSD 214	Ph+Six
	IC.0009	50.09.2105	NE5532N	XR5532N, 5532NB	Sig+Ex+Ra
	IC.0010	50.09.2105	NE5532N	XR5532N, 5532NB	Sig+Ex+Ra
	Q..0001	1.010.034.50	T 114 sel	See Note 1	Sie
	Q..0002	1.010.034.50	T 114 sel	See Note 1	Sie
	Q..0003	1.010.034.50	T 114 sel	See Note 1	Sie
	Q..0004	50.03.2451	BD139-10	NPN	Ph,Sie,Tf
	Q..0005	50.03.2452	BD140-10	PNP	Ph,Sie,Tf
	Q..0006	1.010.034.50	T 114 sel	See Note 1	Sie

IND.	POS.NO.	PART NO.	VALUE	SPECIFICATIONS / EQUIVALENT	MANUF.
	Q..0007	1.010.034.50	T 114 sel	See Note 1	Sie
	Q..0008	1.010.034.50	T 114 sel	See Note 1	Sie
	R..0001	57.11.3272	2.7 kOhm	1%	
	R..0002	57.11.3272	2.7 kOhm	1%	
	R..0003	57.11.3272	2.7 kOhm	1%	
	R..0004	57.11.3272	2.7 kOhm	1%	
	R..0005	57.11.4103	10 kOhm	5%	
	R..0006	57.11.4103	10 kOhm	5%	
	R..0007	57.11.3202	2 kOhm	1%	
	R..0008	57.11.4122	1.2 kOhm	5%	
	R..0009	57.11.3681	680 Ohm	1%	
	R..0010	57.11.4101	100 Ohm	5%	
	R..0011	57.11.4122	1.2 kOhm	5%	
	R..0012	57.11.4122	1.2 kOhm	5%	
	R..0013	57.11.4273	27 kOhm	5%	
	R..0014	57.11.4183	18 kOhm	5%	
	R..0015	57.11.4273	27 kOhm	5%	
	R..0016	57.11.4102	1 kOhm	2%	
	R..0017	57.11.4102	1 kOhm	5%	
	R..0018	57.11.4272	2.7 kOhm	2%	
	R..0019	57.11.4181	180 Ohm	2%	
	R..0020	57.11.3622	6.2 kOhm	5%	
	R..0021	57.11.4104	100 kOhm	5%	
	R..0022	57.11.4471	470 Ohm	2%	
	R..0023	57.11.4104	100 kOhm	5%	
	R..0024	57.11.4823	82 kOhm	5%	
	R..0025	57.11.4223	22 kOhm	5%	
	R..0026	57.11.4392	3.9 kOhm	2%	
	R..0027	57.11.4470	47 Ohm	5%	
	R..0028	57.11.4472	4.7 kOhm	5%	
	R..0029	57.11.4105	1 MOhm	5%	
	R..0030	57.11.4104	100 kOhm	5%	
	R..0031	57.11.4102	1 kOhm	5%	
	R..0032	57.11.4223	22 kOhm	5%	
	R..0033	57.11.4104	100 kOhm	5%	
	R..0034	57.11.4104	100 kOhm	5%	

IND.	POS.NO.	PART NO.	VALUE	SPECIFICATIONS / EQUIVALENT	MANUF.
	R..0035	57.11.4105	1 MOhm	5%	
	R..0036	57.11.4479	4.7 Ohm	5%	
	R..0037	57.11.4479	4.7 Ohm	5%	
	R..0038	57.11.4471	470 Ohm	5%	
	R..0039	57.11.4102	1 kOhm	5%	
	R..0040	57.11.4221	220 Ohm	5%	
	R..0041	57.11.4102	1 kOhm	5%	
	R..0042	57.92.1151	150 mA	See Note 2	
	R..0043	57.11.4272	2.7 kOhm	2%	
	R..0044	57.11.4105	1 MOhm	5%	
	R..0045	57.92.1151	150 mA	See Note 2	
	R..0046	57.11.4152	1.5 kOhm	2%	
	R..0047	57.11.4105	1 MOhm	5%	
	R..0048	57.11.4272	2.7 kOhm	2%	
	R..0049	57.11.4105	1 MOhm	5%	
	R..0050	57.11.4562	5.6 kOhm	5%	
	R..0051	57.11.4474	470 kOhm	5%	
	R..0052	58.01.8202	2 kOhm	See Note 3	
	R..0053	57.11.4104	100 kOhm	5%	
	R..0054	57.11.4102	1 kOhm	5%	
	R..0055	57.11.4104	100 kOhm	5%	
	R..0056	57.11.4474	470 kOhm	5%	
	R..0057	57.11.4122	1.2 kOhm	5%	
	R..0058	57.11.4332	3.3 kOhm	5%	
	R..0059	57.11.4332	3.3 kOhm	5%	
	R..0060	57.11.4102	1 kOhm	5%	
	R..0061	57.11.4122	1.2 kOhm	5%	
	R..0062	57.11.4122	1.2 kOhm	5%	
	R..0063	57.11.4101	100 Ohm	2%	
	R..0064	57.11.4122	1.2 kOhm	2%	
	R..0065	57.11.4272	2.7 kOhm	2%	
	R..0066	57.11.3131	130 Ohm	1%	
	R..0067	57.11.4681	680 Ohm	2%	
	R..0068	57.11.3203	20 kOhm	5%	
	R..0069	57.11.4471	470 Ohm	5%	
	R..0070	57.11.4472	4.7 kOhm	5%	
	R..0071	57.11.4394	390 kOhm	5%	

IND.	POS.NO.	PART NO.	VALUE	SPECIFICATIONS / EQUIVALENT	MANUF.
	R..0072	57.11.4182	1.8 kOhm	2%	
	R..0073	57.11.3153	15 kOhm	1%	
	R..0074	57.11.4822	8.2 kOhm	5%	
	R..0075	57.11.3432	4.3 kOhm	1%	
	R..0076	57.11.4103	10 kOhm	5%	
	R..0077	57.11.3681	680 Ohm	1%	
	R..0078	57.11.3302	3 kOhm	1%	
	R..0079	57.11.3622	6.2 kOhm	5%	
	R..0080	57.11.4104	100 kOhm	5%	
	R..0081	58.01.8202	2 kOhm	See Note 4	
	R..0082	57.11.3202	2 kOhm	5%	
	R..0083	57.11.4471	470 Ohm	2%	
	R..0084	57.11.3112	1.1 kOhm	5%	
	R..0085	57.11.4272	2.7 kOhm	2%	
	R..0086	57.11.4472	4.7 kOhm	2%	
	R..0087	57.11.3912	9.1 kOhm	1%	
	R..0088	57.11.4152	1.5 kOhm	2%	
	R..0089	57.11.4103	10 kOhm	2%	
	R..0090	57.11.4104	100 kOhm	5%	
	R..0091	57.11.4105	1 MOhm	5%	
	S+1/0-9	59.01.0170		SAE-Nr. 1010-692	
	T..0001	1.022.360.00		Output Transformer	St
	T..0002	1.022.419.00		Input Transformer 1:1	St

IND.	POS.NO.	PART NO.	VALUE	SPECIFICATIONS / EQUIVALENT	MANUF.

(01) 85.11.21. Improved reliability.

Note 1 - T 114 sel. for invers mode (iBC = 3 mA)
VCE < 0.7 mV. iE 0 mA. VCE < 25 mV. iE 4 mA

Note 2 - 150 mA PTC-Resistor
Philips Nr. 2322 661 11511
PTC-Resistor may be replaced by Fuse-Resistor
SF.19.01804 Philips Nr. 2322 525 13189.

Note 3 - 2 kOhm Potentiometer lin. ± 10%
Bourns Nr. 3386 F-1-202
Allen Bradley Nr. E 2 N 202
Spectrol Nr. 63 M 202 T010

Note 4 - 2 kOhm Potentiometer lin. ± 10%
Bourns Nr. 3296 Z - 1 - 202
Spectrol Nr. 64 Z 202 T 000
Murata Nr. PGT 3105 Z - 1 - 202
Contelec Nr. 183 XZ 202

Ce=Ceramic, El=Electrolytic, Sal=Solid aluminium

MANUFACTURER: Ex=Exar, ITT=Intermetall, Mot=Motorola,
NS=National Semiconductor, Ph=Philips, Ra=Raytheon,
Ses=Sescosem, Sie=Siemens, Sig=Signetics, Six=Siliconix,
St=Studer, Tf=Telefunken, TI=Texas Instruments.

ORIG 85/05/20 (01) 85/11/21

PUBLISHED: 12/86

LINE AMPLIFIER 1.820.714.84

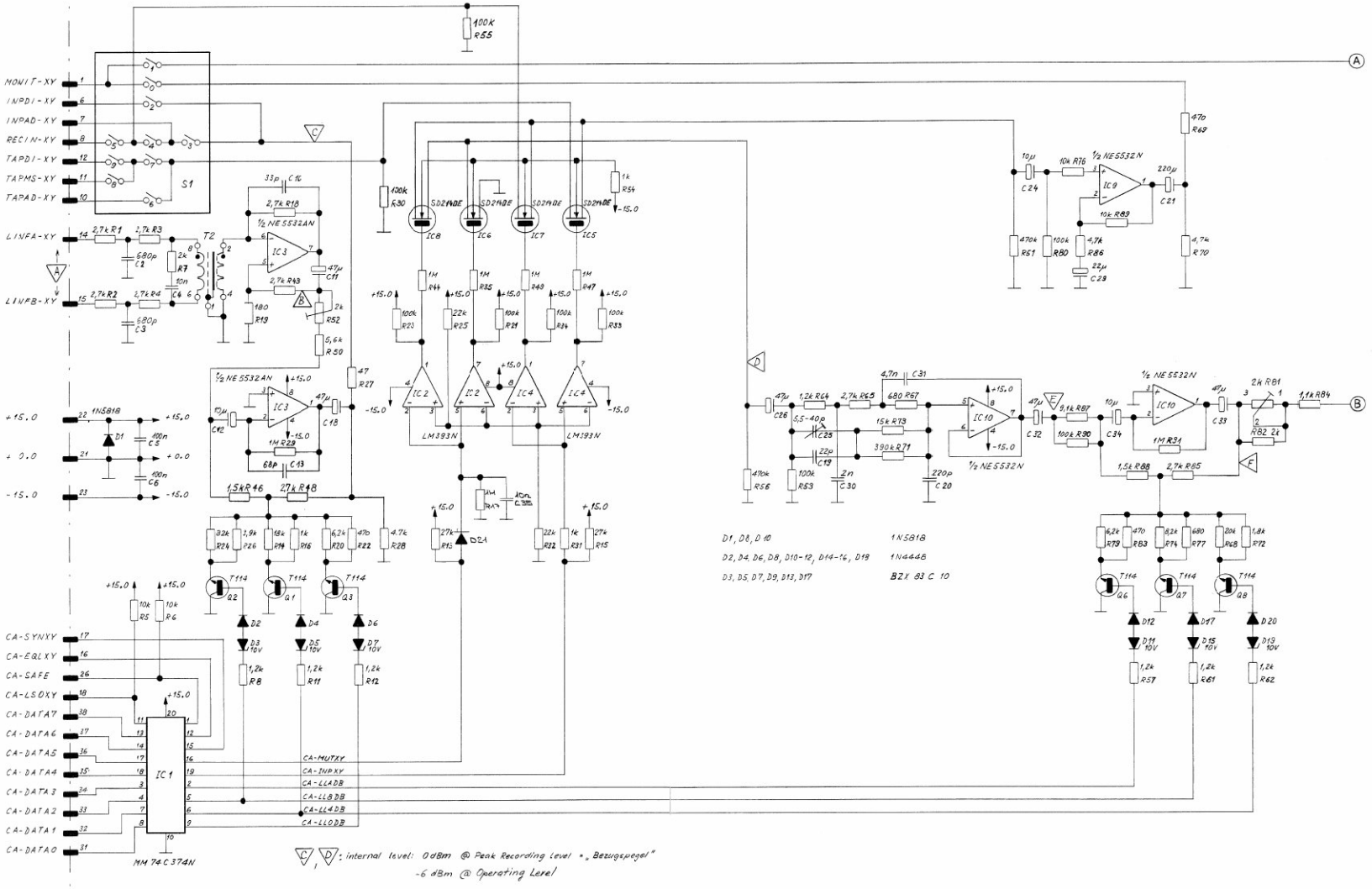

20.06.85	B. Bernel	A 820 / A810 Audio Section		
STUDER	Line Amplifier	SC	1.820.714-84	PAGE 1 OF 2

LINE AMPLIFIER 1.820.714.84

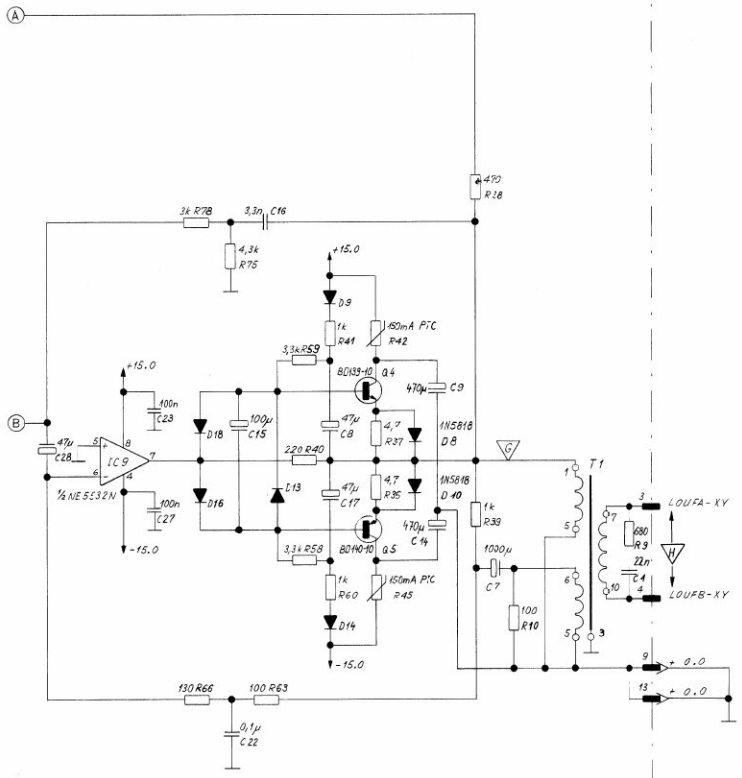

20.06.85	B.Berrill	A 820 / A 810 Audio Section		
STUDER	Line Amplifier	SC	1.820.714-84	PAGE 2 OF 2

LINE AMPLIFIER 1.820.714.84

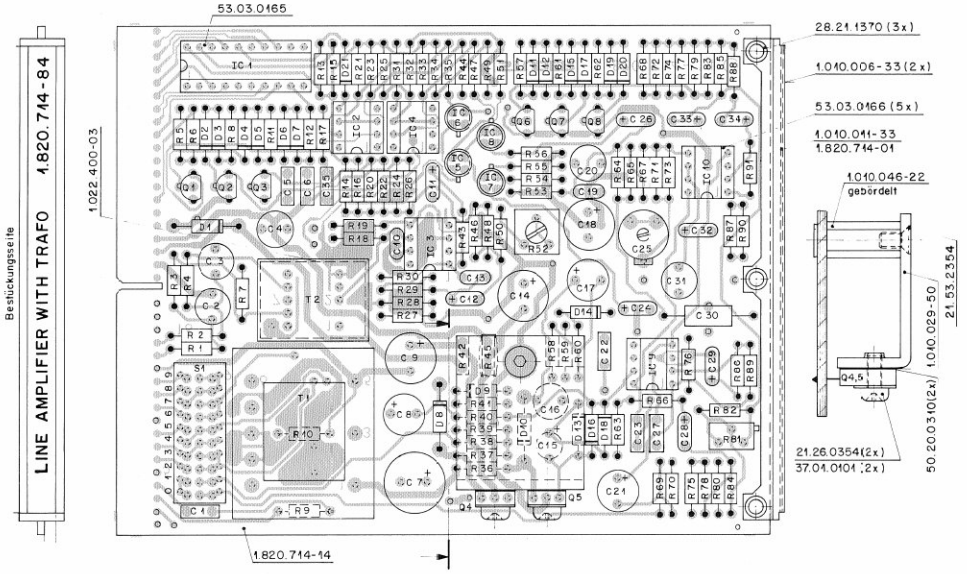

IND.	POS.NO.	PART NO.	VALUE	SPECIFICATIONS / EQUIVALENT	MANUF.
	C..0001	59.06.0223	22 nF	10%	
	C..0002	59.05.1681	680 pF	1%	
	C..0003	59.05.1681	680 pF	1%	
	C..0004	59.05.1103	10 nF	1%	
	C..0005	59.06.0104	100 nF	20%, PETP	
	C..0006	59.06.0104	100 nF	20%, PETP	
	C..0007	59.22.2102	1000 uF	-10%, 6V, El	
	C..0008	59.22.6470	47 uF	-10%, 40V, El	
	C..0009	59.22.4471	470 uF	-10%, 16V, El	
	C..0010	59.34.2330	33 pF	5%, N150, Ce	
	C..0011	59.26.0470	47 uF	20%, 6.3V, Sal	Ph
	C..0012	59.26.2100	10 uF	20%, 16V, Sal	Ph
	C..0013	59.34.2680	68 pF	5%, N150, Ce	
	C..0014	59.22.4471	470 uF	-10%, 16V, El	
	C..0015	59.22.3101	100 uF	-10%, 10V, El	
	C..0016	59.05.1332	3300 pF	1%	
	C..0017	59.22.6470	47 uF	-10%, 40V, El	
	C..0018	59.99.0401	47 uF	20%, 16V, El bipolar	
	C..0019	59.34.2220	22 pF	5%, N150, Ce	
	C..0020	59.05.1221	220 pF	1%	
	C..0021	59.22.2221	220 uF	-10%, 6V, El	
	C..0022	59.06.0104	0.1 uF	5%	
	C..0023	59.06.0104	100 nF	20%, PETP	
	C..0024	59.26.2100	10 uF	20%, 16V, Sal	Ph
	C..0025	59.18.0108	40 pF	Trimmer capacitor, Philips Nr 2222 808 32409	
	C..0026	59.26.0470	47 uF	20%, 6.3V, Sal	Ph
	C..0027	59.06.0104	100 nF	20%, PETP	
	C..0028	59.26.0470	47 uF	20%, 6.3V, Sal	Ph
	C..0029	59.26.1220	22 uF	20%, 10V, Sal	Ph
	C..0030	59.12.7202	2 nF	1%	
	C..0031	59.05.1472	4.7 nF	1%	
	C..0032	59.26.0470	47 uF	20%, 6.3V, Sal	Ph
	C..0033	59.26.0470	47 uF	20%, 6.3V, Sal	Ph
	C..0034	59.26.2100	10 uF	20%, 16V, Sal	Ph
	C..0035	59.06.5103	10 nF	20%, PETP	
	D..0001	50.04.0512	1N5818		Mot

S T U D E R (00) 88/01/21 MAR LINE AMPLIFIER PL 1.820.714.84 PAGE 1

IND.	POS.NO.	PART NO.	VALUE	SPECIFICATIONS / EQUIVALENT	MANUF.
	D..0002	50.04.0125	1N4448		Fe/ITT,Ph/SES,Tf
	D..0003	50.04.1114	10V Z	5% ITT,Sem	
	D..0004	50.04.0125	1N4448		Fe/ITT,Ph/SES,Tf
	D..0005	50.04.1114	10V Z	5% ITT,Sem	
	D..0006	50.04.0125	1N4448		Fe/ITT,Ph/SES,Tf
	D..0007	50.04.1114	10V Z	5% ITT,Sem	
	D..0008	50.04.0512	1N5818		Mot
	D..0009	50.04.0125	1N4448		Fe/ITT,Ph/SES,Tf
	D..0010	50.04.0512	1N5818		Mot
	D..0011	50.04.1114	10V Z	5% ITT,Sem	
	D..0012	50.04.0125	1N4448		Fe/ITT,Ph/SES,Tf
	D..0013	50.04.0125	1N4448		Fe/ITT,Ph/SES,Tf
	D..0014	50.04.0125	1N4448		Fe/ITT,Ph/SES,Tf
	D..0015	50.04.1114	10V Z	5% ITT,Sem	
	D..0016	50.04.0125	1N4448		Fe/ITT,Ph/SES,Tf
	D..0017	50.04.0125	1N4448		Fe/ITT,Ph/SES,Tf
	D..0018	50.04.0125	1N4448		Fe/ITT,Ph/SES,Tf
	D..0019	50.04.1114	10V Z	5% ITT,Sem	
	D..0020	50.04.0125	1N4448		Fe/ITT,Ph/SES,Tf
	D..0021	50.04.0125	1N4448		Fe/ITT,Ph/SES,Tf
	IC..0001	50.07.0003	MM74C374N	NS	
	IC..0002	50.05.0283	LM393N	TI,NS	
	IC..0003	50.09.0106	NE5532AN	XR5532AN, 5532ANB	Sig,Ex,Na
	IC..0004	50.05.0283	LM393N	TI,NS	
	IC..0005	50.11.0106	SD 214 DE	BSD 214	Ph,Six
	IC..0006	50.11.0106	SD 214 DE	BSD 214	Ph,Six
	IC..0007	50.11.0106	SD 214 DE	BSD 214	Ph,Six
	IC..0008	50.11.0106	SD 214 DE	BSD 214	Ph,Six
	IC..0009	50.09.0105	NE5532N	XR5532N, 5532NB	Sig,Ex,Na
	IC..0010	50.09.0105	NE5532N	XR5532N, 5532NB	Sig,Ex,Na
	Q..0001	1.010.034.50	T 114 sel	See Note 1	Sie
	Q..0002	1.010.034.50	T 114 sel	See Note 1	Sie
	Q..0003	1.010.034.50	T 114 sel	See Note 1	Sie
	Q..0004	50.03.0451	BD139-10	NPN	Ph,Sie,Tf
	Q..0005	50.03.0452	BD140-10	PNP	Ph,Sie,Tf

S T U D E R (00) 88/01/21 MAR LINE AMPLIFIER PL 1.820.714.84 PAGE 2

IND.	POS.NO.	PART NO.	VALUE	SPECIFICATIONS / EQUIVALENT	MANUF.
	Q..0006	1.010.034.50	T 114 sel	See Note 1	Sie
	Q..0007	1.010.034.50	T 114 sel	See Note 1	Sie
	Q..0008	1.010.034.50	T 114 sel	See Note 1	Sie
	R..0001	57.11.3272	2.7 kOhm	1%	
	R..0002	57.11.3272	2.7 kOhm	1%	
	R..0003	57.11.3272	2.7 kOhm	1%	
	R..0004	57.11.3272	2.7 kOhm	1%	
	R..0005	57.11.3103	10 kOhm	5%	
	R..0006	57.11.3103	10 kOhm	5%	
	R..0007	57.11.3202	2 kOhm	1%	
	R..0008	57.11.3122	1.2 kOhm	5%	
	R..0009	57.11.3681	680 Ohm	1%	
	R..0010	57.11.3101	100 Ohm	5%	
	R..0011	57.11.3122	1.2 kOhm	5%	
	R..0012	57.11.3122	1.2 kOhm	5%	
	R..0013	57.11.3273	27 kOhm	5%	
	R..0014	57.11.3183	18 kOhm	5%	
	R..0015	57.11.3273	27 kOhm	5%	
	R..0016	57.11.3102	1 kOhm	2%	
	R..0017	57.11.3105	1 MOhm	5%	
	R..0018	57.11.3272	2.7 kOhm	2%	
	R..0019	57.11.3181	180 Ohm	2%	
	R..0020	57.11.3622	6.2 kOhm	5%	
	R..0021	57.11.3104	100 kOhm	5%	
	R..0022	57.11.3471	470 Ohm	2%	
	R..0023	57.11.3104	100 kOhm	5%	
	R..0024	57.11.3823	82 kOhm	5%	
	R..0025	57.11.3223	22 kOhm	5%	
	R..0026	57.11.3392	3.9 kOhm	2%	
	R..0027	57.11.3470	47 Ohm	5%	
	R..0028	57.11.3472	4.7 kOhm	5%	
	R..0029	57.11.3105	1 MOhm	5%	
	R..0030	57.11.3104	100 kOhm	5%	
	R..0031	57.11.3102	1 kOhm	5%	
	R..0032	57.11.3223	22 kOhm	5%	
	R..0033	57.11.3104	100 kOhm	5%	

S T U D E R (00) 88/01/21 MAR LINE AMPLIFIER PL 1.820.714.84 PAGE 3

IND.	POS.NO.	PART NO.	VALUE	SPECIFICATIONS / EQUIVALENT	MANUF.
	R..0034	57.11.3104	100 kOhm	5%	
	R..0035	57.11.3105	1 MOhm	5%	
	R..0036	57.11.3479	4.7 Ohm	5%	
	R..0037	57.11.3479	4.7 Ohm	5%	
	R..0038	57.11.3471	470 Ohm	5%	
	R..0039	57.11.3102	1 kOhm	5%	
	R..0040	57.11.3221	220 Ohm	5%	
	R..0041	57.11.3102	1 kOhm	5%	
	R..0042	57.92.1151	150 mA	See Note 2	
	R..0043	57.11.3272	2.7 kOhm	2%	
	R..0044	57.11.3105	1 MOhm	5%	
	R..0045	57.92.1151	150 mA	See Note 2	
	R..0046	57.11.3152	1.5 kOhm	2%	
	R..0047	57.11.3105	1 MOhm	5%	
	R..0048	57.11.3272	2.7 kOhm	2%	
	R..0049	57.11.3105	1 MOhm	5%	
	R..0050	57.11.3562	5.6 kOhm	5%	
	R..0051	57.11.3474	470 kOhm	5%	
	R..0052	58.01.8202	2 kOhm	See Note 3	
	R..0053	57.11.3104	100 kOhm	5%	
	R..0054	57.11.3102	1 kOhm	5%	
	R..0055	57.11.3104	100 kOhm	5%	
	R..0056	57.11.3474	470 kOhm	5%	
	R..0057	57.11.3122	1.2 kOhm	5%	
	R..0058	57.11.3332	3.3 kOhm	5%	
	R..0059	57.11.3332	3.3 kOhm	5%	
	R..0060	57.11.3102	1 kOhm	5%	
	R..0061	57.11.3122	1.2 kOhm	5%	
	R..0062	57.11.3122	1.2 kOhm	5%	
	R..0063	57.11.3101	100 Ohm	2%	
	R..0064	57.11.3122	1.2 kOhm	2%	
	R..0065	57.11.3272	2.7 kOhm	2%	
	R..0066	57.11.3131	130 Ohm	1%	
	R..0067	57.11.3681	680 Ohm	2%	
	R..0068	57.11.3203	20 kOhm	5%	
	R..0069	57.11.3471	470 Ohm	5%	
	R..0070	57.11.3472	4.7 kOhm	5%	

S T U D E R (00) 88/01/21 MAR LINE AMPLIFIER PL 1.820.714.84 PAGE 4

IND.	POS.NO.	PART NO.	VALUE	SPECIFICATIONS / EQUIVALENT	MANUF.
	R..0071	57.11.3394	390 kOhm	5%	
	R..0072	57.11.3182	1.8 kOhm	2%	
	R..0073	57.11.3153	15 kOhm	1%	
	R..0074	57.11.3822	8.2 kOhm	5%	
	R..0075	57.11.3432	4.3 kOhm	1%	
	R..0076	57.11.3103	10 kOhm	5%	
	R..0077	57.11.3681	680 Ohm	1%	
	R..0078	57.11.3302	3 kOhm	1%	
	R..0079	57.11.3622	6.2 kOhm	5%	
	R..0080	57.11.3104	100 kOhm	5%	
	R..0081	58.05.0202	2 kOhm	See Note 4	
	R..0082	57.11.3202	2 kOhm	5%	
	R..0083	57.11.3471	470 Ohm	2%	
	R..0084	57.11.3112	1.1 kOhm	5%	
	R..0085	57.11.3272	2.7 kOhm	2%	
	R..0086	57.11.3472	4.7 kOhm	2%	
	R..0087	57.11.3912	9.1 kOhm	1%	
	R..0088	57.11.3152	1.5 kOhm	2%	
	R..0089	57.11.3103	10 kOhm	2%	
	R..0090	57.11.3104	100 kOhm	5%	
	R..0091	57.11.3105	1 MOhm	5%	
	S.1/0-9	58.01.0170		SAE-Nr. 1010-692	
	T..0001	1.022.360.00		Output Transformer	St
	T..0002	1.022.419.00		Input Transformer 1:1	St

S T U D E R (00) 88/01/21 MAR LINE AMPLIFIER PL 1.820.714.84 PAGE 5

IND.	POS.NO.	PART NO.	VALUE	SPECIFICATIONS / EQUIVALENT	MANUF.

Note 1 - T 114 sel. for invers mode (iBC = 3 mA)
VCE < 0.7 mV, iE 0 mA. VCE < 25 mV, iE 4 mA

Note 2 - 150 mA PTC-Resistor
Philips Nr. 2322 661 11511
PTC-Resistor may be replaced by Fuse-Resistor
57.19.0180, Philips Nr. 2322 205 13189.

Note 3 - 2 kOhm Potentiometer lin., 10%
Bourns Nr. 3386 P-1-202
Allen Bradley Nr. E 2 B 202
Spectrol Nr. 63 M 202 T010

Note 4 - 2 kOhm Potentiometer lin., 10%
Bourns Nr. 3296 Z - 1 - 202
Spectrol Nr. 64 Z 202 T 000
Murata Nr. POT 3105 Z - 1 - 202
Cosmec Nr. 183 XZ 202

Ce=Ceramic, El=Electrolytic, Sal=Solid aluminium

MANUFACTURER: Ex=Exar, ITT=Intermetall, Mot=Motorola,
NS=National Semiconductor, Ph=Philips, Ra=Raytheon,
Sem=Semicoxon, Sie=Siemens, Sig=Signetics, Six=Siliconix,
St=Studer, Tf=Telefunken, TI=Texas Instruments.

ORIG 88/01/21

S T U D E R (00) 88/01/21 MAR LINE AMPLIFIER PL 1.820.714.84 PAGE 6

LINE AMPLIFIER WITH TRAFO 1.820.814.00 GR20 EL11/16

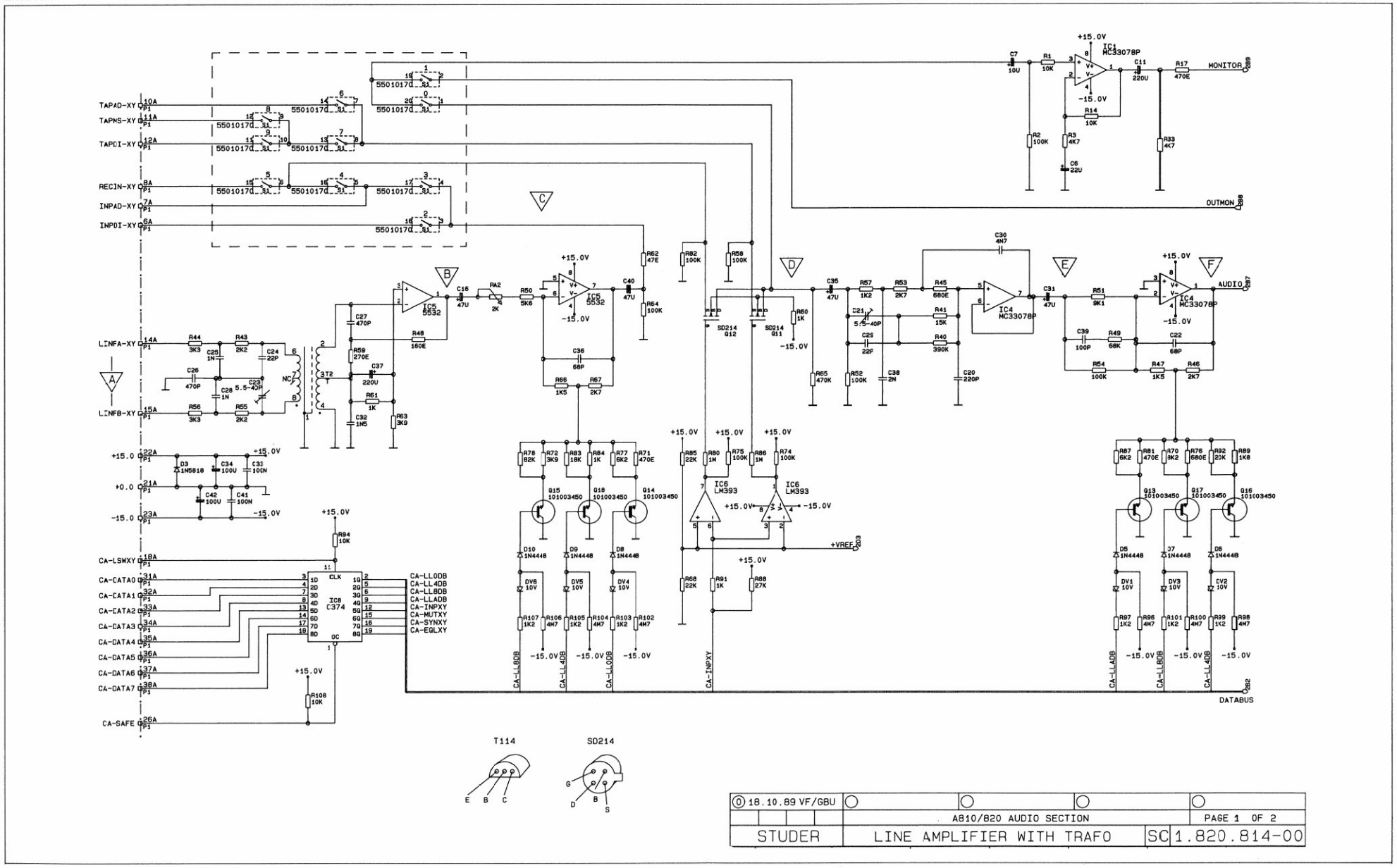

0 18.10.89 VF/GBU			
	A810/820 AUDIO SECTION		PAGE 1 OF 2
STUDER	LINE AMPLIFIER WITH TRAFO	SC	1.820.814-00

LINE AMPLIFIER WITH TRAFO 1.820.814.00

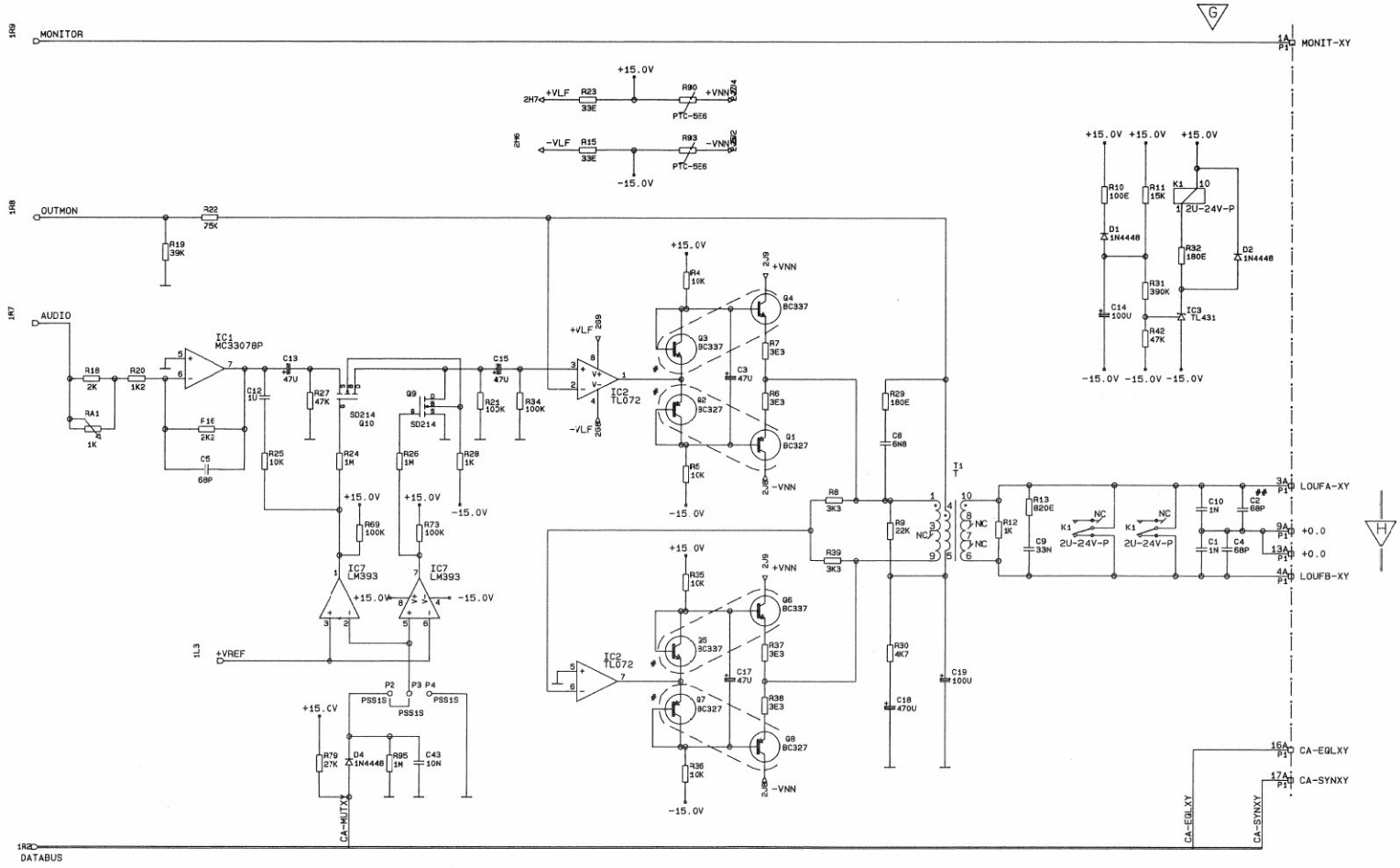

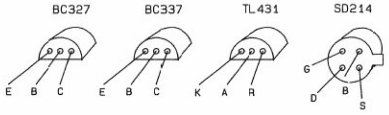

*VBE MATCHED AND THERM. COUPLED
**C2 NOT USED

0 18.10.89 VF/GBU				
	A810/820 AUDIO SECTION		PAGE 2 OF 2	
STUDER	LINE AMLIFIER WITH TRAFO	SC	1.820.814-00	

LINE AMPLIFIER WITH TRAFO 1.820.814.00

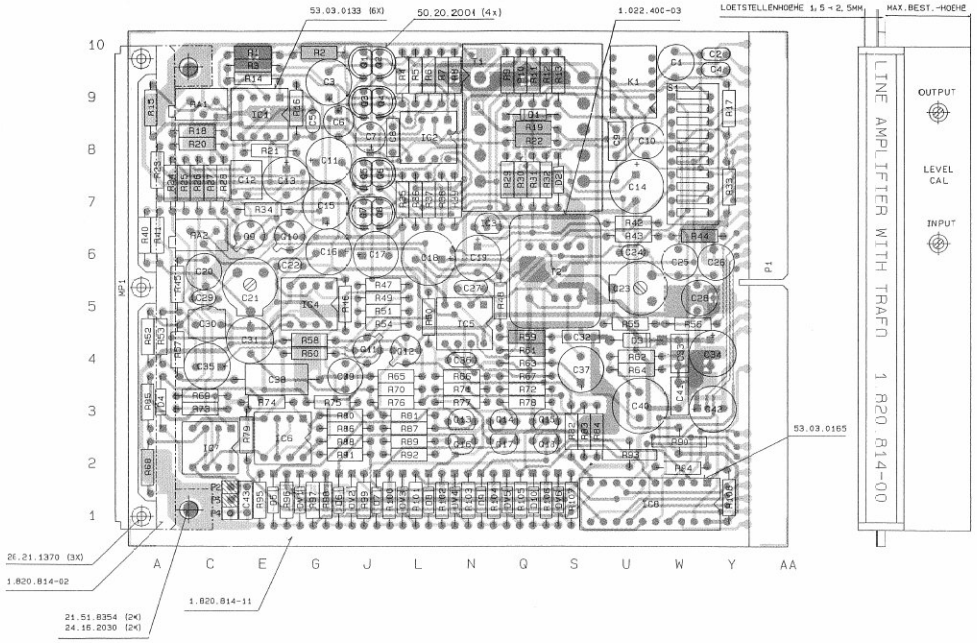

IND.	POS.NO.	PART NO.	VALUE	SPECIFICATIONS / EQUIVALENT	MANUF.
	C....1	59.05.1102	1 nF	1%, 630V , PP	
(00)	C....2	59.34.2680	68 pF	5%, CER	
(01)	C....2		set was1		
	C....3	59.22.4470	47 uF	-20%, 16V , EL	
	C....4	59.34.2680	68 pF	5%, CER	
	C....5	59.34.4680	68 pF	5%, CER	
	C....6	59.22.5220	22 uF	-20%, 25V , EL	
	C....7	59.22.6100	10 uF	-20%, 35V , EL	
	C....8	59.06.0682	6.8 uF	10%, 63V , PETP	
	C....9	59.06.0333	33 nF	10%, 63V , PETP	
	C....10	59.05.1102	1 nF	1%, 630V , PP	
	C....11	59.22.3221	220 uF	-20%, 10V , EL	
	C....12	59.06.0105	1 uF	10%, 50V , PETP	
	C....13	59.22.4470	47 uF	-20%, 16V , EL	
	C....14	59.22.6101	100 uF	-20%, 40V , EL	
	C....15	59.22.4470	47 uF	-20%, 16V , EL	
	C....16	59.22.4470	47 uF	-20%, 16V , EL	
	C....17	59.22.4470	47 uF	-20%, 16V , EL	
	C....18	59.22.2471	470 uF	-20%, 6.3V , EL	
	C....19	59.22.4101	100 uF	-20%, 16V , EL	
	C....20	59.05.1221	220 pF	1%, 630V , PP	
	C....21	59.18.0108	5.5--40 pF	100V , TRI	
	C....22	59.34.4680	68 pF	5%, CER	
	C....23	59.18.0108	5.5--40 pF	100V , TRI	
	C....24	59.34.2220	22 pF	5%, CER	
	C....25	59.05.1102	1 nF	1%, 630V , PP	
	C....26	59.05.2471	470 pF	2.5%, 630V , PP	
	C....27	59.34.5471	470 pF	5%, CER	
	C....28	59.05.1102	1 nF	1%, 630V , PP	
	C....29	59.34.2220	22 pF	5%, CER	
	C....30	59.05.1472	4.7 nF	1%, 63V , PP	
	C....31	59.22.4470	47 uF	-20%, 16V , EL	
	C....32	59.06.0152	1.5 uF	10%, 63V , PETP	
	C....33	59.06.0104	100 nF	10%, 63V , PETP	
	C....34	59.22.5101	100 uF	-20%, 25V , EL	
	C....35	59.22.4470	47 uF	-20%, 16V , EL	
	C....36	59.34.2680	68 pF	5%, CER	

S T U D E R (01) 90/03/26 DUP LINE AMPLIFIER WITH TRAFO PL 1.820.814.00 PAGE 1

IND.	POS.NO.	PART NO.	VALUE	SPECIFICATIONS / EQUIVALENT	MANUF.
	C....37	59.22.3221	220 uF	-20%, 10V , EL	
	C....38	59.12.7202	2 nF	1%, 63V , PS	
	C....39	59.05.1101	100 pF	1%, 630V , PP	
	C....40	59.99.0401	47 uF	-10%, 16V , ELBIP	
	C....41	59.06.0104	100 nF	10%, 63V , PETP	
	C....42	59.22.5101	100 uF	-20%, 25V , EL	
	C....43	59.06.5103	10 nF	5%, 63V , PETP	
	D....1	50.04.0125	1N 4448		Fe;ITT;Ph;Tf
	D....2	50.04.0125	1N 4448		Fe;ITT;Ph;Tf
	D....3	50.04.0512	1N 5818	1N 5819	Mot
	D....4	50.04.0125	1N 4448		Fe;ITT;Ph;Tf
	D....5	50.04.0125	1N 4448		Fe;ITT;Ph;Tf
	D....6	50.04.0125	1N 4448		Fe;ITT;Ph;Tf
	D....7	50.04.0125	1N 4448		Fe;ITT;Ph;Tf
	D....8	50.04.0125	1N 4448		Fe;ITT;Ph;Tf
	D....9	50.04.0125	1N 4448		Fe;ITT;Ph;Tf
	D....10	50.04.0125	1N 4448		Fe;ITT;Ph;Tf
	DV....1	50.04.1114	10 V	5%, 0.40W, Z	ITT;Mot;Ph;Tf;SGS
	DV....2	50.04.1114	10 V	5%, 0.40W, Z	ITT;Mot;Ph;Tf;SGS
	DV....3	50.04.1114	10 V	5%, 0.40W, Z	ITT;Mot;Ph;Tf;SGS
	DV....4	50.04.1114	10 V	5%, 0.40W, Z	ITT;Mot;Ph;Tf;SGS
	DV....5	50.04.1114	10 V	5%, 0.40W, Z	ITT;Mot;Ph;Tf;SGS
	DV....6	50.04.1114	10 V	5%, 0.40W, Z	ITT;Mot;Ph;Tf;SGS
	IC....1	50.09.0117	MC 3007BP		Mot
	IC....2	50.09.0101	TL 072 CP		Mot;Ti;NS;SGS
	IC....3	50.10.0106	TL 431CLP		Mot;Ti
	IC....4	50.09.0117	MC 3007BP		Mot
	IC....5	50.09.0106	NE 5532AN	XR 5532 AN	Ex;Sig;Ra
	IC....6	50.05.0283	LM 393 ..	TDB 0193 BP	Fa;Sig
	IC....7	50.05.0283	LM 393 ..	TDB 0193 BP	Fa;Sig
	IC....8	50.07.0003	HM74C374N		NS
	J....1	54.01.0021	Jumper		

S T U D E R (01) 90/03/26 DUP LINE AMPLIFIER WITH TRAFO PL 1.820.814.00 PAGE 2

IND.	POS.NO.	PART NO.	VALUE	SPECIFICATIONS / EQUIVALENT	MANUF.
	F....1	56.04.0197	24 V 2A8	125V/ 2 A , AG/AU	SDS
	P....2	54.01.0020	Connector	contact pin .63*.63; H=5.8/3.4	
	P....3	54.01.0020	Connector	contact pin .63*.63; H=5.8/3.4	
	P....4	54.01.0020	Connector	contact pin .63*.63; H=5.8/3.4	
	Q....1	50.03.0625	BC 327	E 6310, see note 2	Sie
	Q....2	50.03.0625	BC 327	E 6310, see note 2	Sie
	Q....3	50.03.0516	BC 337	E 6310, see note 2	Sie
	Q....4	50.03.0516	BC 337	E 6310, see note 2	Sie
	Q....5	50.03.0516	BC 337	E 6310, see note 2	Sie
	Q....6	50.03.0516	BC 337	E 6310, see note 2	Sie
	Q....7	50.03.0625	BC 327	E 6310, see note 2	Sie
	Q....8	50.03.0625	BC 327	E 6310, see note 2	Sie
	Q....9	50.11.0106	SD 214-BE		Ph;Six
	Q....10	50.11.0106	SD 214-BE		Ph;Six
	Q....11	50.11.0106	SD 214-BE		Ph;Six
	Q....12	50.11.0106	SD 214-BE		Ph;Six
	Q....13	1.010.034.50	Q; BPN	see note 1	
	Q....14	1.010.034.50	Q; BPN	see note 1	
	Q....15	1.010.034.50	Q; BPN	see note 1	
	Q....16	1.010.034.50	Q; BPN	see note 1	
	Q....17	1.010.034.50	Q; BPN	see note 1	
	Q....18	1.010.034.50	Q; BPN	see note 1	
	R....1	57.11.3103	10 kOhm	2%, 0207 , MF	
	R....2	57.11.3104	100 kOhm	1%, 0207 , MF	
	R....3	57.11.3472	4.7 kOhm	1%, 0207 , MF	
	R....4	57.11.3103	10 kOhm	2%, 0207 , MF	
	R....5	57.11.3103	10 kOhm	2%, 0207 , MF	
	R....6	57.11.3339	3.3 Ohm	1%, 0207 , MF	
	R....7	57.11.3339	3.3 Ohm	1%, 0207 , MF	
	R....8	57.11.3332	3.3 kOhm	1%, 0207 , MF	
	R....9	57.11.3223	22 kOhm	1%, 0207 , MF	
	R....10	57.11.3101	100 Ohm	10%, 0207 , MF	
	R....11	57.11.3153	15 kOhm	10%, 0207 , MF	
	R....12	57.11.3102	1 kOhm	2%, 0207 , MF	

S T U D E R (01) 90/03/26 DUP LINE AMPLIFIER WITH TRAFO PL 1.820.814.00 PAGE 3

IND.	POS.NO.	PART NO.	VALUE	SPECIFICATIONS / EQUIVALENT	MANUF.
	R....13	57.11.3821	820 Ohm	2%, 0207 , MF	
	R....14	57.11.3103	10 kOhm	1%, 0207 , MF	
	R....15	57.11.3330	33 Ohm	2%, 0207 , MF	
	R....16	57.11.3222	2.2 kOhm	2%, 0207 , MF	
	R....17	57.11.3471	470 Ohm	2%, 0207 , MF	
	R....18	57.11.3202	2 kOhm	2%, 0207 , MF	
	R....19	57.11.3393	39 kOhm	1%, 0207 , MF	
	R....20	57.11.3122	1.2 kOhm	2%, 0207 , MF	
	R....21	57.11.3104	100 kOhm	2%, 0207 , MF	
	R....22	57.11.3753	75 kOhm	1%, 0207 , MF	
	R....23	57.11.3330	33 Ohm	2%, 0207 , MF	
	R....24	57.11.3105	1 MOhm	10%, 0207 , MF	
	R....25	57.11.3103	10 kOhm	2%, 0207 , MF	
	R....26	57.11.3105	1 MOhm	10%, 0207 , MF	
	R....27	57.11.3473	47 kOhm	2%, 0207 , MF	
	R....28	57.11.3102	1 kOhm	10%, 0207 , MF	
	R....29	57.11.3181	180 Ohm	2%, 0207 , MF	
	R....30	57.11.3472	4.7 kOhm	2%, 0207 , MF	
	R....31	57.11.3394	390 kOhm	10%, 0207 , MF	
	R....32	57.11.3181	180 Ohm	10%, 0207 , MF	
	R....33	57.11.3472	4.7 kOhm	2%, 0207 , MF	
	R....34	57.11.3104	100 kOhm	2%, 0207 , MF	
	R....35	57.11.3103	10 kOhm	2%, 0207 , MF	
	R....36	57.11.3103	10 kOhm	2%, 0207 , MF	
	R....37	57.11.3339	3.3 Ohm	1%, 0207 , MF	
	R....38	57.11.3339	3.3 Ohm	1%, 0207 , MF	
	R....39	57.11.3332	3.3 kOhm	1%, 0207 , MF	
	R....40	57.11.3394	390 kOhm	1%, 0207 , MF	
	R....41	57.11.3153	15 kOhm	1%, 0207 , MF	
	R....42	57.11.3473	47 kOhm	10%, 0207 , MF	
	R....43	57.11.3222	2.2 kOhm	1%, 0207 , MF	
	R....44	57.11.3332	3.3 kOhm	1%, 0207 , MF	
	R....45	57.11.3681	680 Ohm	1%, 0207 , MF	
	R....46	57.11.3272	2.7 kOhm	1%, 0207 , MF	
	R....47	57.11.3152	1.5 kOhm	1%, 0207 , MF	
	R....48	57.11.3161	160 Ohm	2%, 0207 , MF	
	R....49	57.11.3603	68 kOhm	1%, 0207 , MF	

S T U D E R (01) 90/03/26 DUP LINE AMPLIFIER WITH TRAFO PL 1.820.814.00 PAGE 4

IND.	POS.NO.	PART NO.	VALUE	SPECIFICATIONS / EQUIVALENT	MANUF.
	R....50	57.11.3562	5.6 kOhm	2%, 0207 , MF	
	R....51	57.11.3912	9.1 kOhm	1%, 0207 , MF	
	R....52	57.11.3104	100 kOhm	1%, 0207 , MF	
	R....53	57.11.3272	2.7 kOhm	1%, 0207 , MF	
	R....54	57.11.3104	100 kOhm	2%, 0207 , MF	
	R....55	57.11.3222	2.2 kOhm	1%, 0207 , MF	
	R....56	57.11.3332	3.3 kOhm	1%, 0207 , MF	
	R....57	57.11.3122	1.2 kOhm	1%, 0207 , MF	
	R....58	57.11.3104	100 kOhm	10%, 0207 , MF	
	R....59	57.11.3271	270 Ohm	2%, 0207 , MF	
	R....60	57.11.3102	1 kOhm	10%, 0207 , MF	
	R....61	57.11.3102	1 kOhm	2%, 0207 , MF	
	R....62	57.11.3470	47 Ohm	10%, 0207 , MF	
	R....63	57.11.3392	3.9 kOhm	2%, 0207 , MF	
	R....64	57.11.3104	100 kOhm	10%, 0207 , MF	
	R....65	57.11.3474	470 kOhm	10%, 0207 , MF	
	R....66	57.11.3152	1.5 kOhm	1%, 0207 , MF	
	R....67	57.11.3272	2.7 kOhm	1%, 0207 , MF	
	R....68	57.11.3223	22 kOhm	10%, 0207 , MF	
	R....69	57.11.3104	100 kOhm	10%, 0207 , MF	
	R....70	57.11.3822	8.2 kOhm	2%, 0207 , MF	
	R....71	57.11.3471	470 Ohm	1%, 0207 , MF	
	R....72	57.11.3392	3.9 kOhm	1%, 0207 , MF	
	R....73	57.11.3104	100 kOhm	10%, 0207 , MF	
	R....74	57.11.3104	100 kOhm	10%, 0207 , MF	
	R....75	57.11.3104	100 kOhm	10%, 0207 , MF	
	R....76	57.11.3681	680 Ohm	1%, 0207 , MF	
	R....77	57.11.3622	6.2 kOhm	2%, 0207 , MF	
	R....78	57.11.3823	82 kOhm	2%, 0207 , MF	
	R....79	57.11.3273	27 kOhm	10%, 0207 , MF	
	R....80	57.11.3105	1 MOhm	10%, 0207 , MF	
	R....81	57.11.3471	470 Ohm	1%, 0207 , MF	
	R....82	57.11.3104	100 kOhm	10%, 0207 , MF	
	R....83	57.11.3183	18 kOhm	2%, 0207 , MF	
	R....84	57.11.3102	1 kOhm	1%, 0207 , MF	
	R....85	57.11.3223	22 kOhm	10%, 0207 , MF	
	R....86	57.11.3105	1 MOhm	10%, 0207 , MF	

S T U D E R (01) 90/03/26 DUP LINE AMPLIFIER WITH TRAFO PL 1.820.814.00 PAGE 5

IND.	POS.NO.	PART NO.	VALUE	SPECIFICATIONS / EQUIVALENT	MANUF.
	R....87	57.11.3622	6.2 kOhm	2%, 0207 , MF	
	R....88	57.11.3273	27 kOhm	10%, 0207 , MF	
	R....89	57.11.3182	1.8 kOhm	1%, 0207 , MF	
	R....90	57.99.0209	5.6 Ohm	PTC	
	R....91	57.11.3102	1 kOhm	10%, 0207 , MF	
	R....92	57.11.3203	20 kOhm	2%, 0207 , MF	
	R....93	57.99.0209	5.6 Ohm	PTC	
	R....94	57.11.3103	10 kOhm	10%, 0207 , MF	
	R....95	57.11.3105	1 MOhm	10%, 0207 , MF	
	R....96	57.11.5475	4.7 MOhm	10%, 0207 , MF	
	R....97	57.11.3122	1.2 kOhm	10%, 0207 , MF	
	R....98	57.11.5475	4.7 MOhm	10%, 0207 , MF	
	R....99	57.11.3122	1.2 kOhm	10%, 0207 , MF	
	R....100	57.11.5475	4.7 MOhm	10%, 0207 , MF	
	R....101	57.11.3122	1.2 kOhm	10%, 0207 , MF	
	R....102	57.11.5475	4.7 MOhm	10%, 0207 , MF	
	R....103	57.11.3122	1.2 kOhm	10%, 0207 , MF	
	R....104	57.11.5475	4.7 MOhm	10%, 0207 , MF	
	R....105	57.11.3122	1.2 kOhm	10%, 0207 , MF	
	R....106	57.11.5475	4.7 MOhm	10%, 0207 , MF	
	R....107	57.11.3122	1.2 kOhm	10%, 0207 , MF	
	R....108	57.11.3103	10 kOhm	10%, 0207 , MF	
	RA....1	58.05.0102	1 kOhm	10%, .5 W , PMG	
	RA....2	58.05.0202	2 kOhm	10%, .5 W , PMG	
	S....1	55.01.0170	DIL-switch	10*AA, print	
	T....1	1.022.362.00		LINE OUTPUT TRAFO 1:1.46	
	T....2	1.022.454.00		INPUT TRAFO 1:0.175	

S T U D E R (01) 90/03/26 DUP LINE AMPLIFIER WITH TRAFO PL 1.820.814.00 PAGE 6

(01) 26.03.90 C2 not used results in better output symmetry.

Note 1 - BC 337 E selected for inverse mode (IBC = 3 mA)
UCE < 0.7 mV. IE 0 mA. UCE < 25 mV. IE 4 mA.

Note 2 - Q1-Q2, Q3-Q4, Q5-Q6, Q7-Q8 matched and thermically coupled
with 50.20.2001.

Cer=Ceramic; ElBip=Electrolytic Bipolar;
El=Electrolytic; Sal=Solid aluminum.

MANUFACTURER: Ex=Exar; Fa=Fairchild; GI=General Instruments;
ITT=Intermetal; Mot=Motorola; NS=National Semicond.;
Ph=Philips; Ra=Raytheon; RCA=Radio Corp. of America;
Sa=Sarcosem; Sie=Siemens; Sig=Signetics; SGS=SGS/Ates;
Sx=Studer; Six=Siliconix; TS=Teledyne Semiconductors;
Tf=Telefunken; TI=Texas Instruments.

ORIG 89/10/18 (01) 90/03/26

S T U D E R (01) 90/03/26 DUP LINE AMPLIFIER WITH TRAFO PL 1.820.814.00 PAGE 7

LINE AMPLIFIER (TRANSFORMERLESS) 1.820.715-00/-81 GR20 EL11/16 "ESE"
- LINE OUTPUT AMPLIFIER PCB 1.820.862-00 "ESE"

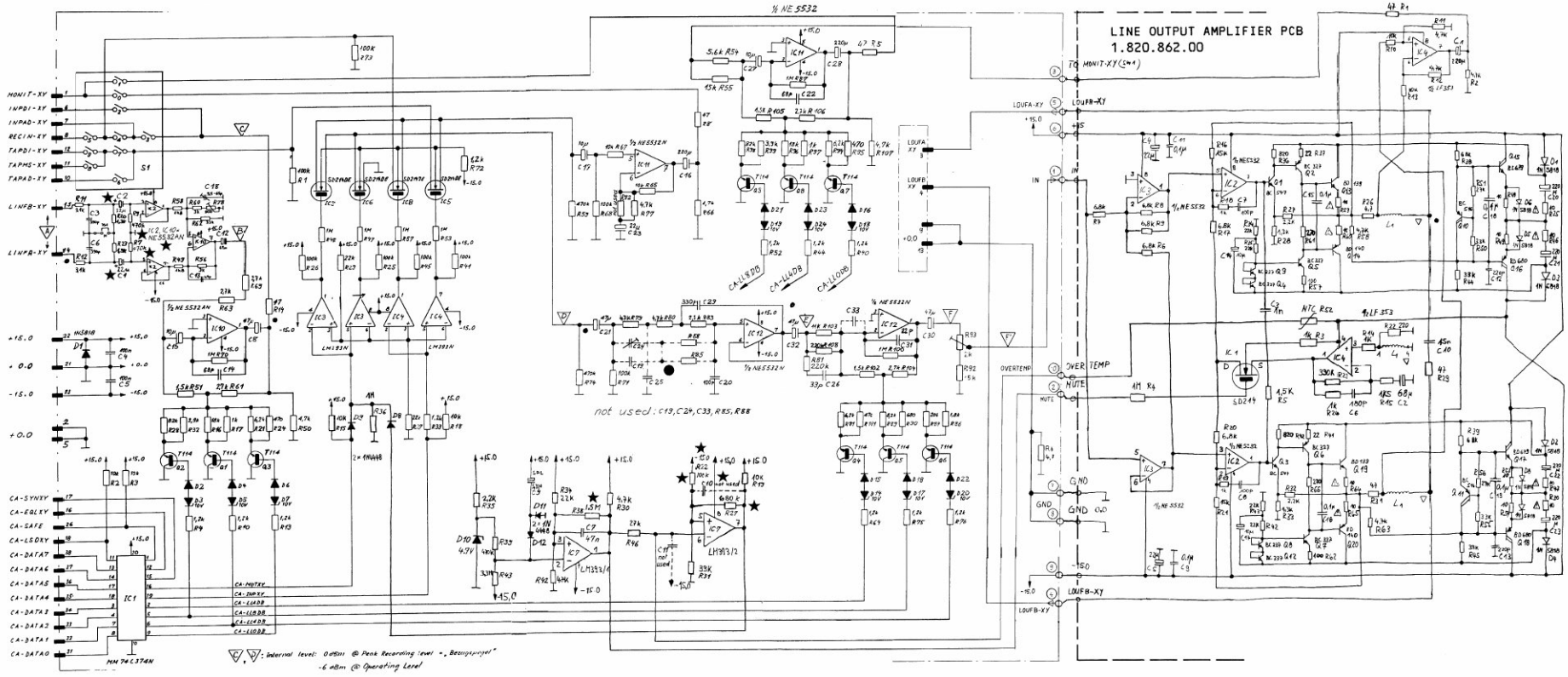

★ HAS BEEN MODIFIED:

	1.820.715.00	1.820.715.81
C10	10 nF (59.06.0102)	NOT USED
R22	33 kΩ (57.11.4333)	100 kΩ (57.11.4104)
R27	1 MΩ or 3.3 MΩ (57.11.4105 or 57.11.5335	680 kΩ (57.11.4684)
R38	3.3 MΩ (57.11.5335)	1.5 MΩ (57.11.5155)

1 6. SEP. 1985 Gä	A810 / A812 / A820			
STUDER	LINE AMP. TRAFOLESS	1.820.715.81	PAGE	OF

10.9.1985 Gä	A810 / A812 / A820			
STUDER	LINE AMP. TRAFOLESS 1.820.715.00/.81	1.820.862.00	PAGE	OF

LINE AMPLIFIER (TRANSFORMERLESS) 1.820.715-00 GR20 EL11/16 "ESE"

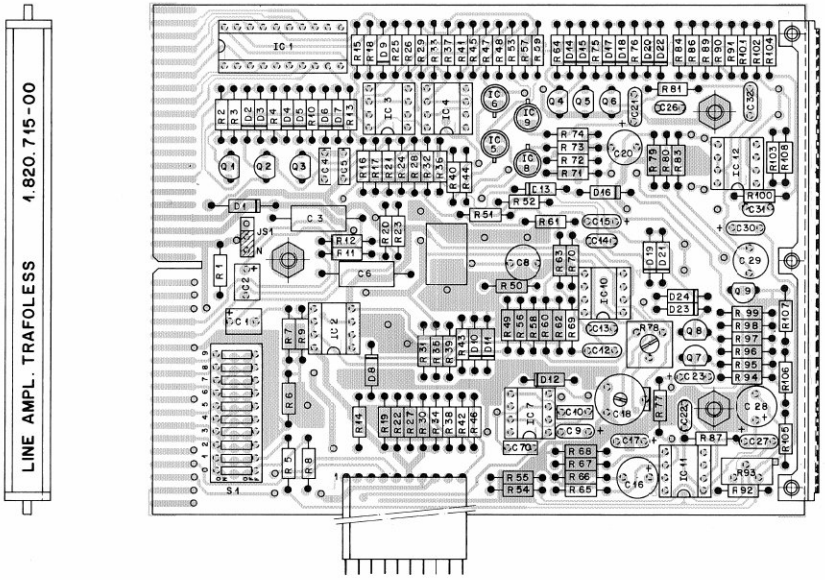

IND.	POS.NO.	PART NO.	VALUE	SPECIFICATIONS / EQUIVALENT	MANUF.
	A.....1	1.820.862.00		Line Output Amplifier	St
(00)	C.....1	59.06.5105	1 uF	PETP	
(01)	C.....1	59.22.6220	22 uF	35V, EL	
(00)	C.....2	59.06.5105	1 uF	PETP	
(01)	C.....2	59.22.6220	22 uF	35V, EL	
	C.....3	59.12.7391	390 pF	1%, PS	
	C.....4	59.06.0104	100 nF	20%, PETP	
	C.....5	59.06.0104	100 nF	20%, PETP	
	C.....6	59.12.7391	390 pF	1%, PS	
	C.....7	59.06.0472	4.7 nF	20%, PETP	
	C.....8	59.22.3470	47 uF	20%, 10V, El	
	C.....9	59.26.2339	3.3 uF	.6 V, SAL	
	C.....10	59.06.0102	1 nF	PETP	
	C.....11		not used		
	C.....12	59.26.0470	47 uF	SAL	Ph
	C.....13	59.34.2470	47 pF	Ce	
	C.....14	59.34.2680	68 pF	5%, N150, Ce	
	C.....15	59.26.2100	10 uF	20%, 16V, Sal	Ph
	C.....16	59.22.2221	220 uF	-10%, 6V, El	
	C.....17	59.26.2100	10 uF	20%, 16V, Sal	Ph
	C.....18	59.18.0102	5.5-65pF		
	C.....19		not used		
	C.....20	59.05.1101	100 p	1%	
	C.....21	59.26.0470	47 uF	20%, 4.3V, Sal	Ph
	C.....22	59.34.2680	68 pF	5%, N150, Ce	
	C.....23	59.26.1220	22 uF	20%, 10V, Sal	Ph
	C.....24		not used		
	C.....25		not used		
	C.....26	59.34.2330	33 pF	Ce	
	C.....27	59.26.2100	10 uF	20%, 16V, Sal	Ph
	C.....28	59.22.2221	220 uF	-10%, 6V, El	
	C.....29	59.05.1331	330 pF	1%, PP	
	C.....30	59.26.0470	47 uF	20%, 4.3V, Sal	Ph
	C.....31	59.34.2220	22 p	Ce	
	C.....32	59.26.0470	47 uF	20%, 4.3V, Sal	Ph
	C.....33		not used		

S T U D E R (01) 86/03/05 GAE LINE AMPLIFIER TRAFOLESS 1.820.715-00

IND.	POS.NO.	PART NO.	VALUE	SPECIFICATIONS / EQUIVALENT	MANUF.
	D.....1	50.04.0512	1N5818		Mot
	D.....2	50.04.0125	1N4448		ITT,Phi,Ses
	D.....3	50.04.1114	10V Z	5%	ITT,Ses
	D.....4	50.04.0125	1N4448		ITT,Phi,Ses
	D.....5	50.04.1114	10V Z	5%	ITT,Ses
	D.....6	50.04.0125	1N4448		ITT,Phi,Ses
	D.....7	50.04.1114	10V Z	5%	ITT,Ses
	D.....8	50.04.0125	1N4448		ITT,Phi,Ses
	D.....9	50.04.0125	1N4448		ITT,Phi,Ses
	D.....10	50.04.1123	4.7V Z		Mot
	D.....11	50.04.0125	1N4448		ITT,Phi,Ses
	D.....12	50.04.0125	1N4448		ITT,Phi,Ses
	D.....13	50.04.1114	10V Z	5%	ITT,Ses
	D.....14	50.04.1114	10V Z	5%	ITT,Ses
	D.....15	50.04.0125	1N4448		ITT,Phi,Ses
	D.....16	50.04.0125	1N4448		ITT,Phi,Ses
	D.....17	50.04.1114	10V Z	5%	ITT,Ses
	D.....18	50.04.0125	1N4448		ITT,Phi,Ses
	D.....19	50.04.1114	10V Z	5%	ITT,Ses
	D.....20	50.04.1114	10V Z	5%	ITT,Ses
	D.....21	50.04.0125	1N4448		ITT,Phi,Ses
	D.....22	50.04.0125	1N4448		ITT,Phi,Ses
	D.....23	50.04.0125	1N4448		ITT,Phi,Ses
	D.....24	50.04.1114	10V Z	5%	ITT,Ses
	IC....1	50.02.0003	MM74C374N		NS
(00)	IC....2	50.09.0101	LF353N	TL072CP	NS,TI
(01)	IC....2	50.09.0106	NE5532AN	RR5532AN, 5532ANB	Sig,Ex,Ka
	IC....3	50.05.0283	LM393N		TI,NS
	IC....4	50.05.0283	LM393N		TI,NS
	IC....5	50.11.0106	SD 214 DE	RSD 214	Phi,Six
	IC....6	50.11.0106	SD 214 DE	RSD 214	Phi,Six
	IC....7	50.05.0283	LM393N		TI,NS
	IC....8	50.11.0106	SD 214 DE	RSD 214	Phi,Six
	IC....9	50.11.0106	SD 214 DE	RSD 214	Phi,Six
	IC....10	50.09.0106	NE5532AN	RR5532AN, 5532ANB	Sig,Ex,Ka
	IC....11	50.09.0105	NE5532N	RR5532N, 5532NB	Sig,Ex,Ka

S T U D E R (01) 86/03/05 GAE LINE AMPLIFIER TRAFOLESS 1.820.715-00

IND.	POS.NO.	PART NO.	VALUE	SPECIFICATIONS / EQUIVALENT	MANUF.
	IC....12	50.09.0106	NE5532AN	RR5532AN, 5532ANB	Sig,Ex,Ka
	JS....1	54.01.0020	3 cont.	Philips Nr. 2422 025 89303 See note 1	
	Q.....1	1.010.034.50	T 114 sel	See Note 2	Sie
	Q.....2	1.010.034.50	T 114 sel	See Note 2	Sie
	Q.....3	1.010.034.50	T 114 sel	See Note 2	Sie
	Q.....4	1.010.034.50	T 114 sel	See Note 2	Sie
	Q.....5	1.010.034.50	T 114 sel	See Note 2	Sie
	Q.....6	1.010.034.50	T 114 sel	See Note 2	Sie
	Q.....7	1.010.034.50	T 114 sel	See Note 2	Sie
	Q.....8	1.010.034.50	T 114 sel	See Note 2	Sie
	Q.....9	1.010.034.50	T 114 sel	See Note 2	Sie
	R.....1	57.11.4104	100 kOhm	5%	
	R.....2	57.11.4103	10 kOhm	5%	
	R.....3	57.11.4103	10 kOhm	5%	
	R.....4	57.11.4122	1.2 kOhm	5%	
	R.....5	57.11.4470	47 Ohm	5%	
	R.....6	57.11.4479	4.7 Ohm	5%	
(00)	R.....7	57.11.5335	3.3 MOhm	5%	
(01)	R.....7	57.11.4474	470 kOhm	5%	
	R.....8	57.11.4470	47 Ohm	5%	
(00)	R.....9	57.11.5335	3.3 MOhm	5%	
(01)	R.....9	57.11.4474	470 kOhm	5%	
	R.....10	57.11.4122	1.2 kOhm	5%	
	R.....11	57.11.3912	9.1 kOhm	1%	
	R.....12	57.11.3912	9.1 kOhm	1%	
	R.....13	57.11.4122	1.2 kOhm	5%	
	R.....14	57.11.4470	47 Ohm	5%	
	R.....15	57.11.4103	10 kOhm	5%	
	R.....16	57.11.4183	18 kOhm	5%	
	R.....17	57.11.3102	1 kOhm	1%	
	R.....18	57.11.4103	10 kOhm	5%	
	R.....19	57.11.4103	10 kOhm	5%	
	R.....20	57.11.3132	1.3 kOhm	1%	
	R.....21	57.11.3622	6.2 kOhm	1%	

IND.	POS.NO.	PART NO.	VALUE	SPECIFICATIONS / EQUIVALENT	MANUF.
	R.....22	57.11.4333	33 kOhm	5%	
	R.....23	57.11.3132	1.3 kOhm	1%	
	R.....24	57.11.3471	470 Ohm	1%	
	R.....25	57.11.4104	100 kOhm	5%	
	R.....26	57.11.4104	100 kOhm	5%	
	R.....27	57.11.5335	3.3 MOhm	5%	
	R.....28	57.11.4823	82 kOhm	5%	
	R.....29	57.11.4223	22 kOhm	5%	
	R.....30	57.11.4472	4.7 kOhm	5%	
	R.....31	57.11.4333	33 kOhm	5%	
	R.....32	57.11.3392	3.9 kOhm	1%	
	R.....33	57.11.4122	1.2 kOhm	5%	
	R.....34	57.11.4223	22 kOhm	5%	
	R.....35	57.11.4222	2.2 kOhm	5%	
	R.....36	57.11.4105	1 MOhm	5%	
	R.....37	57.11.4223	22 kOhm	5%	
	R.....38	57.11.5335	3.3 MOhm	5%	
	R.....39	57.11.4474	470 kOhm	5%	
	R.....40	57.11.4122	1.2 kOhm	5%	
	R.....41	57.11.4104	100 kOhm	5%	
	R.....42	57.11.4472	4.7 kOhm	5%	
	R.....43	57.11.5335	3.3 kOhm	5%	
	R.....44	57.11.4122	1.2 kOhm	5%	
	R.....45	57.11.4104	100 kOhm	5%	
	R.....46	57.11.4273	27 kOhm	5%	
	R.....47	57.11.4105	1 MOhm	5%	
	R.....48	57.11.4105	1 MOhm	5%	
	R.....49	57.11.3182	1.8 kOhm	1%	
	R.....50	57.11.4472	4.7 kOhm	5%	
	R.....51	57.11.3152	1.5 kOhm	1%	
	R.....52	57.11.4122	1.2 kOhm	5%	
	R.....53	57.11.4105	1 MOhm	5%	
	R.....54	57.11.3562	5.6 kOhm	5%	
	R.....55	57.11.4153	15 kOhm	2%	
	R.....56	57.11.3302	3 kOhm	1%	
	R.....57	57.11.4105	1 MOhm	5%	
	R.....58	57.11.3182	1.8 kOhm	1%	
	R.....59	57.11.4474	470 kOhm	5%	
	R.....60	57.11.3302	3 kOhm	1%	
	R.....61	57.11.3272	2.7 kOhm	1%	
	R.....62	57.11.5333	33 kOhm	2%	
	R.....63	57.11.3272	2.7 kOhm	2%	
	R.....64	57.11.4122	1.2 kOhm	5%	
	R.....65	57.11.4103	10 kOhm	2%	
	R.....66	57.11.4472	4.7 kOhm	5%	
	R.....67	57.11.4103	10 kOhm	5%	
	R.....68	57.11.4104	100 kOhm	5%	
	R.....69	57.11.2272	2.7 kOhm	1%	
	R.....70	57.11.4105	1 MOhm	5%	
	R.....71	57.11.4104	100 kOhm	5%	
	R.....72	57.11.4122	1.2 kOhm	5%	
	R.....73	57.11.4104	100 kOhm	5%	
	R.....74	57.11.4474	470 kOhm	5%	
	R.....75	57.11.4122	1.2 kOhm	5%	
	R.....76	57.11.4122	1.2 kOhm	5%	
	R.....77	57.11.4472	4.7 kOhm	2%	
	R.....78	59.01.5501	500 Ohm	See note 3	
	R.....79	57.11.4472	4.7 kOhm	2%	
	R.....80	57.11.4472	4.7 kOhm	2%	
	R.....81	57.11.4224	220 kOhm	2%	
	R.....82		not used		
	R.....83	57.11.4222	2.2 kOhm	2%	
	R.....84	57.11.3203	20 kOhm	5%	
	R.....85		not used		
	R.....86	57.11.3182	1.8 kOhm	1%	
	R.....87	57.11.4105	1 MOhm	5%	
	R.....88		not used		
	R.....89	57.11.4122	1.2 kOhm	5%	
	R.....90	57.11.3681	680 Ohm	1%	
	R.....91	57.11.3622	6.2 kOhm	5%	
	R.....92	57.11.4153	15 kOhm	5%	
	R.....93	59.05.0202	2 kOhm	See note 4	
	R.....94	57.11.3622	6.2 kOhm	5%	
	R.....95	57.11.3471	470 Ohm	1%	
	R.....96	57.11.4183	18 kOhm	5%	
	R.....97	57.11.3102	1 kOhm	1%	
	R.....98	57.11.4823	82 kOhm	5%	
	R.....99	57.11.3392	3.9 kOhm	1%	
	R.....100	57.11.4105	1 MOhm	5%	
	R.....101	57.11.3471	470 Ohm	1%	
	R.....102	57.11.3152	1.5 kOhm	1%	
	R.....103	57.11.3113	11 kOhm	1%	
	R.....104	57.11.3272	2.7 kOhm	1%	
	R.....105	57.11.3152	1.5 kOhm	1%	
	R.....106	57.11.3272	2.7 kOhm	1%	
	R.....107	57.11.4472	4.7 kOhm	5%	
	R.....108	57.11.4224	220 kOhm	5%	
	S.....1	55.01.0170		SAE-Nr. 1C10-6492	

S T U D E R (01) 86/03/05 GAE LINE AMPLIFIER TRAFOLESS 1.820.715-00

(01) 86.03.05 Improved pop-corn noise figure of input stage.

Note 1 - Bridge Studer Nr. 54.01.0021
Philips Nr. 2422 024 88003

Note 2 - T 114 sel. for invers mode (iBC = 3 mA)
VCE < 0.7 mV, iE 0 mA. VCE < 25 mV, iE 4 mA

Note 3 - 500 Ohm Potentiometer lin., 10%
Allen Bradly Nr. E 28 501
Bourns Nr. 3386 F-1- 501
Spectrol Nr. 63 M 501 '010

Note 4 - 2 kOhm Potentiometer lin., 10%
Bourns Nr. 3296 Z - 1 - 202
Spectrol Nr. 64 Z 202 T 000
Murata Nr. POT 3105 Z - 1 - 202
Contelec Nr. 183 XZ 202

Ce=Ceramic, El=Electrolytic, PETP=Polyester, PP=Polypropylen
Sal=Solid aluminium

MANUFACTURER: Ex=Exar, ITT=Intermetall, Mot=Motorola,
NS=National Semiconductor, Phi=Philips, Ray=Raytheon,
Ses=Sescosem, Sie=Siemens, Sig=Signetics, Six=Siliconix,
St=Studer, Tf=Telefunken, TI=Texas Instruments.

ORIG 85/09/10 (01) 86/03/05

S T U D E R (01) 86/03/05 GAE LINE AMPLIFIER TRAFOLESS 1.820.715-00

PUBLISHED: 12/86

LINE AMPLIFIER (TRANSFORMERLESS) 1.820.715-81 GR20 EL11/16 "ESE"

COMPONENT SIDE

LINE AMPL. TRAFOLESS 1.820.715-XX

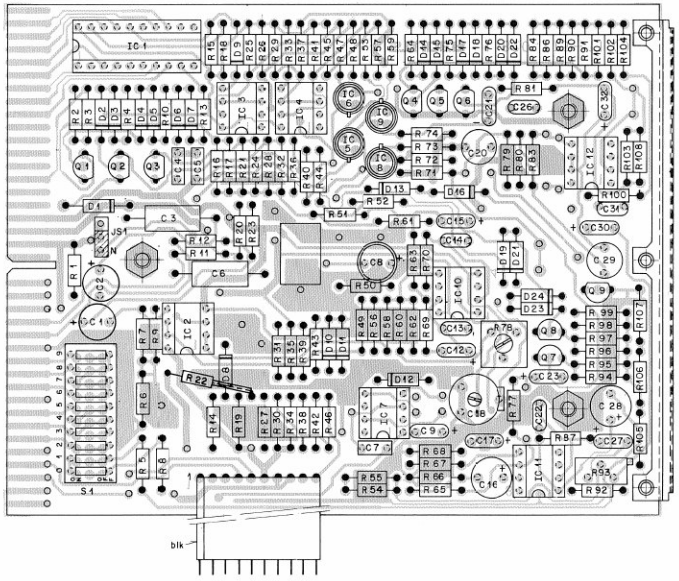

IND.	POS.NO.	PART NO.	VALUE	SPECIFICATIONS / EQUIVALENT	MANUF.
	A....1	1.820.862.00		Line Output Amplifier	St
	C....1	59.22.6220	22 uF	35V, L	
	C....2	59.22.6220	22 uF	35V, L	
	C....3	59.12.7391	390 pF	1%, PS	
	C....4	59.06.0104	100 nF	20%, PETP	
	C....5	59.06.0104	100 nF	20%, PETP	
	C....6	59.12.7391	390 pF	1%, PS	
	C....7	59.06.0472	4.7 nF	20%, PETP	
	C....8	59.22.3470	47 uF	20%, 10V, El	
	C....9	59.26.2339	3.3 uF	16 V, SKL	
	C....10		not used		
	C....11		not used		
	C....12	59.26.0470	47 uF	SKL	Ph
	C....13	59.34.2470	47 pF	Ce	
	C....14	59.34.6680	68 pF	5%, N150, Ce	
	C....15	59.26.2100	10 uF	20%, 16V, Sal	Ph
	C....16	59.22.2221	220 uF	-10%, 6V, El	
	C....17	59.26.2100	10 uF	20%, 16V, Sal	Ph
	C....18	59.18.0102	5x5-6pF		
	C....19		not used		
	C....20	59.05.1101	100 p	1%	
	C....21	59.26.0470	47 uF	20%, 6.3V, Sal	Ph
	C....22	59.34.2680	68 pF	5%, N150, Ce	
	C....23	59.26.1220	22 uF	20%, 10V, Sal	Ph
	C....24		not used		
	C....25		not used		
	C....26	59.34.2330	33 pF	Ce	
	C....27	59.26.2100	10 uF	20%, 16V, Sal	Ph
	C....28	59.22.2221	220 uF	-10%, 6V, E	
	C....29	59.05.1331	330 pF	1%, PP	
	C....30	59.26.0470	47 uF	20%, 6.3V, Sal	Ph
	C....31	59.34.2220	22 p	Ce	
	C....32	59.26.0470	47 uF	20%, 6.3V, Sal	Ph
	C....33		not used		
	D....1	50.04.0512	1N5818		Mot

S T U D E R (00) 86/03/17 GAE LINE AMPLIFIER TRAFOLESS 1.820.715.81

IND.	POS.NO.	PART NO.	VALUE	SPECIFICATIONS / EQUIVALENT	MANUF.
	D....2	50.04.0125	1N4448		ITT+Phi+Ses
	D....3	50.04.1114	10V Z	5%	ITT+Ses
	D....4	50.04.0125	1N4448		ITT+Phi+Ses
	D....5	50.04.1114	10V Z	5%	ITT+Ses
	D....6	50.04.0125	1N4448		ITT+Phi+Ses
	D....7	50.04.1114	10V Z	5%	ITT+Ses
	D....8	50.04.0125	1N4448		ITT+Phi+Ses
	D....9	50.04.0125	1N4448		ITT+Phi+Ses
	D....10	50.04.1123	4.7V Z		Mot
	D....11	50.04.0125	1N4448		ITT+Phi+Ses
	D....12	50.04.0125	1N4448		ITT+Phi+Ses
	D....13	50.04.1114	10V Z	5%	ITT+Ses
	D....14	50.04.1114	10V Z	5%	ITT+Ses
	D....15	50.04.0125	1N4448		ITT+Phi+Ses
	D....16	50.04.0125	1N4448		ITT+Phi+Ses
	D....17	50.04.1114	10V Z	5%	ITT+Ses
	D....18	50.04.0125	1N4448		ITT+Phi+Ses
	D....19	50.04.1114	10V Z	5%	ITT+Ses
	D....20	50.04.1114	10V Z	5%	ITT+Ses
	D....21	50.04.0125	1N4448		ITT+Phi+Ses
	D....22	50.04.0125	1N4448		ITT+Phi+Ses
	D....23	50.04.0125	1N4448		ITT+Phi+Ses
	D....24	50.04.1114	10V Z	5%	ITT+Ses
	IC....1	50.07.0003	MM74C374N		NS
	IC....2	50.09.0106	NE5532AN	KR5532ANB, 5532ANB	Sig+Exr+Ra
	IC....3	50.05.0283	LM393N		TI+NS
	IC....4	50.05.0283	LM393N		TI+NS
	IC....5	50.11.0106	SD 214 DE	BSD 214	Phi+Sie
	IC....6	50.11.0106	SD 214 DE	BSD 214	Phi+Sie
	IC....7	50.05.0283	LM393N		TI+NS
	IC....8	50.11.0106	SD 214 DE	BSD 214	Phi+Sie
	IC....9	50.11.0106	SD 214 DE	BSD 214	Phi+Sie
	IC....10	50.09.0106	NE5532AN	KR5532AN, 5532ANB	Sig+Exr+Ra
	IC....11	50.09.0105	NE5532N	KR5532N, 5532NB	Sig+Exr+Ra
	IC....12	50.09.0106	NE5532AN	KR5532AN, 5532ANB	Sig+Exr+Ra

S T U D E R (00) 86/03/17 GAE LINE AMPLIFIER TRAFOLESS 1.820.715.81

IND.	POS.NO.	PART NO.	VALUE	SPECIFICATIONS / EQUIVALENT	MANUF.
	R....26	57.11.4104	100 kOhm	5%	
	R....27	57.11.4684	680 kOhm	5%	
	R....28	57.11.4823	82 kOhm	5%	
	R....29	57.11.4223	22 kOhm	5%	
	R....30	57.11.4472	4.7 kOhm	5%	
	R....31	57.11.4333	33 kOhm	5%	
	R....32	57.11.3392	3.9 kOhm	1%	
	R....33	57.11.4122	1.2 kOhm	5%	
	R....34	57.11.4223	22 kOhm	5%	
	R....35	57.11.4222	2.2 kOhm	5%	
	R....36	57.11.4105	1 MOhm	5%	
	R....37	57.11.4223	22 kOhm	5%	
	R....38	57.11.4155	1.5 MOhm	5%	
	R....39	57.11.4474	470 kOhm	5%	
	R....40	57.11.4122	1.2 kOhm	5%	
	R....41	57.11.4104	100 kOhm	5%	
	R....42	57.11.4472	4.7 kOhm	5%	
	R....43	57.11.5335	3.3 kOhm	5%	
	R....44	57.11.4122	1.2 kOhm	5%	
	R....45	57.11.4104	100 kOhm	5%	
	R....46	57.11.4273	27 kOhm	5%	
	R....47	57.11.4105	1 MOhm	5%	
	R....48	57.11.4105	1 MOhm	5%	
	R....49	57.11.3182	1.8 kOhm	1%	
	R....50	57.11.4472	4.7 kOhm	5%	
	R....51	57.11.3152	1.5 kOhm	1%	
	R....52	57.11.4122	1.2 kOhm	5%	
	R....53	57.11.4105	1 MOhm	5%	
	R....54	57.11.3562	5.6 kOhm	5%	
	R....55	57.11.4153	15 kOhm	2%	
	R....56	57.11.3302	3 kOhm	1%	
	R....57	57.11.4105	1 MOhm	5%	
	R....58	57.11.3182	1.8 kOhm	1%	
	R....59	57.11.4474	470 kOhm	5%	
	R....60	57.11.3302	3 kOhm	1%	
	R....61	57.11.3272	2.7 kOhm	1%	
	R....62	57.11.4333	33 kOhm	2%	
	R....63	57.11.3272	2.7 kOhm	2%	
	R....64	57.11.4122	1.2 kOhm	5%	
	R....65	57.11.4103	10 kOhm	2%	
	R....66	57.11.4472	4.7 kOhm	5%	
	R....67	57.11.4103	10 kOhm	5%	
	R....68	57.11.4104	100 kOhm	5%	
	R....69	57.11.3272	2.7 kOhm	1%	
	R....70	57.11.4105	1 MOhm	5%	
	R....71	57.11.4104	100 kOhm	5%	
	R....72	57.11.4122	1.2 kOhm	5%	
	R....73	57.11.4104	100 kOhm	5%	
	R....74	57.11.4474	470 kOhm	5%	
	R....75	57.11.4122	1.2 kOhm	5%	
	R....76	57.11.4122	1.2 kOhm	5%	
	R....77	57.11.4472	4.7 kOhm	2%	
	R....78	58.01.8501	500 Ohm	See note 3	
	R....79	57.11.4472	4.7 kOhm	2%	
	R....80	57.11.4472	4.7 kOhm	2%	
	R....81	57.11.4224	220 kOhm	2%	
	R....82		not used		
	R....83	57.11.4222	2.2 kOhm	2%	
	R....84	57.11.3203	20 kOhm	5%	
	R....85		not used		
	R....86	57.11.3182	1.8 kOhm	1%	
	R....87	57.11.4105	1 MOhm	5%	
	R....88		not used		
	R....89	57.11.4822	8.2 kOhm	5%	
	R....90	57.11.3681	680 Ohm	1%	
	R....91	57.11.3622	6.2 kOhm	5%	
	R....92	57.11.4153	15 kOhm	5%	
	R....93	58.05.0202	2 kOhm	See note 4	
	R....94	57.11.3622	6.2 kOhm	5%	
	R....95	57.11.3471	470 Ohm	1%	
	R....96	57.11.4183	18 kOhm	5%	
	R....97	57.11.3102	1 kOhm	1%	
	R....99	57.11.4823	82 kOhm	5%	
	R....99	57.11.3392	3.9 kOhm	1%	
	R....100	57.11.4105	1 MOhm	5%	
	R....101	57.11.3471	470 Ohm	1%	
	R....102	57.11.3152	1.5 kOhm	1%	
	R....103	57.11.3113	11 kOhm	1%	
	R....104	57.11.3272	2.7 kOhm	1%	
	R....105	57.11.3152	1.5 kOhm	1%	
	R....106	57.11.3272	2.7 kOhm	1%	
	R....107	57.11.4472	4.7 kOhm	5%	
	R....108	57.11.4224	220 kOhm	5%	
	S....1	55.01.0170		SIE-Nr. 1010-692	

S T U D E R (00) 86/03/17 GAE LINE AMPLIFIER TRAFOLESS 1.820.715.81

IND.	POS.NO.	PART NO.	VALUE	SPECIFICATIONS / EQUIVALENT	MANUF.
	JS....1	54.01.0020	3 cont.	Philips Nr. 2422 025 88303 See note 1	
	Q....1	1.010.034.50	T 114 sel	See Note 2	Sie
	Q....2	1.010.034.50	T 114 sel	See Note 2	Sie
	Q....3	1.010.034.50	T 114 sel	See Note 2	Sie
	Q....4	1.010.034.50	T 114 sel	See Note 2	Sie
	Q....5	1.010.034.50	T 114 sel	See Note 2	Sie
	Q....6	1.010.034.50	T 114 sel	See Note 2	Sie
	Q....7	1.010.034.50	T 114 sel	See Note 2	Sie
	Q....8	1.010.034.50	T 114 sel	See Note 2	Sie
	Q....9	1.010.034.50	T 114 sel	See Note 2	Sie
	R....1	57.11.4104	100 kOhm	5%	
	R....2	57.11.4103	10 kOhm	5%	
	R....3	57.11.4103	10 kOhm	5%	
	R....4	57.11.4122	1.2 kOhm	5%	
	R....5	57.11.4470	47 Ohm	5%	
	R....6	57.11.4479	4.7 Ohm	5%	
	R....7	57.11.4474	470 kOhm	5%	
	R....8	57.11.4470	47 Ohm	5%	
	R....9	57.11.4474	470 kOhm	5%	
	R....10	57.11.4122	1.2 kOhm	5%	
	R....11	57.11.3912	9.1 kOhm	1%	
	R....12	57.11.3912	9.1 kOhm	1%	
	R....13	57.11.4122	1.2 kOhm	5%	
	R....14	57.11.4470	47 Ohm	5%	
	R....15	57.11.4103	10 kOhm	5%	
	R....16	57.11.4183	18 kOhm	5%	
	R....17	57.11.3102	1 kOhm	1%	
	R....18	57.11.4103	10 kOhm	5%	
	R....19	57.11.4103	10 kOhm	5%	
	R....20	57.11.3132	1.3 kOhm	1%	
	R....21	57.11.3622	6.2 kOhm	1%	
	R....22	57.11.4104	100 kOhm	5%	
	R....23	57.11.3132	1.3 kOhm	1%	
	R....24	57.11.3471	470 Ohm	1%	
	R....25	57.11.4104	100 kOhm	5%	

S T U D E R (00) 86/03/17 GAE LINE AMPLIFIER TRAFOLESS 1.820.715.81

IND.	POS.NO.	PART NO.	VALUE	SPECIFICATIONS / EQUIVALENT	MANUF.

Note 1 - Bridge Studer Nr. 54.01.0021
Philips Nr. 2422 024 88003

Note 2 - T 114 sel. for invers mode (IBC = 3 mA)
VCE < 0.7 mV, IC 0 mA, VCE < 25 mV, IC 4 mA

Note 3 - 500 Ohm Potentiometer lin., 10%
Allen Bradly Nr. E 20 501
Bourns Nr. 3386 F-1- 501
Spectrol Nr. 63 M 501 T010

Note 4 - 2 kOhm Potentiometer lin., 10%
Bourns Nr. 3296 Z - 1 - 202
Spectrol Nr. 64 Z 202 T 000
Murata Nr. PdT 3105 Z - 1 - 202
Contelec Nr. 183 XZ 202

Ce=Ceramic, El=Electrolytic, PETP=Polyester, PP=Polypropylen
Sal=Solid aluminium.

MANUFACTURER: Ex=Exar, ITT=Intermetall, Mot=Motorola,
NS=National Semiconductor, Phi=Philips, Ra=Raytheon,
Ses=Sescosem, Sie=Siemens, Sig=Signetics, Sil=Siliconix,
St=Studer, Tf=Telefunken, TI=Texas Instruments.

ORIG 86/03/17

S T U D E R (00) 86/03/17 GAE LINE AMPLIFIER TRAFOLESS 1.820.715.81 PAGE 7

LINE OUTPUT AMPLIFIER PCB 1.820.862-00 "ESE"

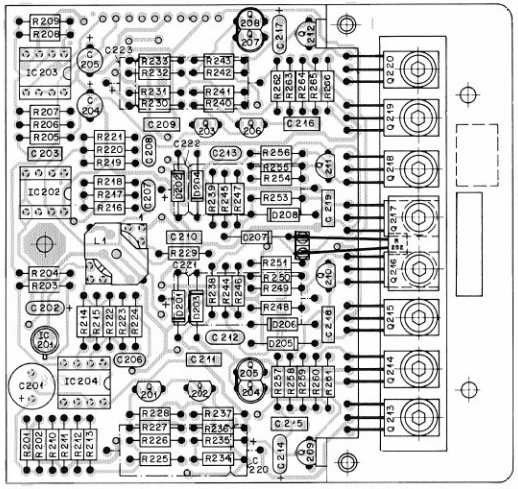

IND.	POS.NO.	PART NO.	VALUE	SPECIFICATIONS / EQUIVALENT	MANUF.
	C..0201	59.22.3221	220 uF	-20%, 10V , El	
	C..0202	59.26.0680	68 uF	-20%, 6.3V , Sal	Ph
	C..0203	59.06.0102	1 nF	10%, 63V , PETP	
	C..0204	59.22.6220	22 uF	-20%, 35V , El	
	C..0205	59.22.6220	22 uF	-20%, 35V , El	
	C..0206	59.34.2181	180 pF	5%, 63V , Cer	
	C..0207	59.34.4101	100 pF	5%, 63V , Cer	
	C..0208	59.34.4101	100 pF	5%, 63V , Cer	
	C..0209	59.06.0104	0.1 uF	10%, 63V , PETP	
	C..0210	59.06.0153	15 nF	10%, 63V , PETP	
	C..0211	59.06.0104	0.1 uF	10%, 63V , PETP	
	C..0212	59.34.4221	220 pF	5%, 63V , Cer	
	C..0213	59.34.4221	220 pF	5%, 63V , Cer	
	C..0214	59.26.2100	10 u	-20%, 16V , Sal	Ph
	C..0215	59.06.0104	0.1 uF	10%, 63V , PETP	
	C..0216	59.06.0104	0.1 uF	10%, 63V , PETP	
	C..0217	59.26.2100	10 uF	-20%, 16V , Sal	Ph
	C..0218	59.06.0104	0.1 uF	10%, 63V , PETP	
	C..0219	59.06.0104	0.1 uF	10%, 63V , PETP	
	C..0220	59.25.5221	220 uF	-10%, 40V , El	
	C..0221	59.25.5221	220 uF	-10%, 40V , El	
	C..0222	59.25.5221	220 uF	-10%, 40V , El	
	C..0223	59.25.5221	220 uF	-10%, 40V , El	
	D..0201	50.04.0512	1N 5818	1N 5819	Mot
	D..0202	50.04.0512	1N 5818	1N 5819	Mot
	D..0203	50.04.0512	1N 5818	1N 5819	Mot
	D..0204	50.04.0512	1N 5818	1N 5819	Mot
	D..0205	50.04.0512	1N 5818	1N 5819	Mot
	D..0206	50.04.0512	1N 5818	1N 5819	Mot
	D..0207	50.04.0512	1N 5818	1N 5819	Mot
	D..0208	50.04.0512	1N 5818	1N 5819	Mot
	IC.0201	50.11.0104	SD214-DE	BSD214	Sig+Ph
	IC.0202	50.09.0105	NE5532 N	XR 5532 N, 5532 NB	Sig+Ex+Ra
	IC.0203	50.09.0105	NE5532 N	XR 5532 N, 5532 NB	Sig+Ex+Ra
	IC.0204	50.09.0101	LF 353 N	TL 072 CP	NS+TI
	L..0201	1.022.273.00	39150 mH		St
	Q..0201	50.03.0436	BC 237 B	BC 541 B	Mot+Ph+Sie+Tf
	Q..0202	50.03.0351	BC 327-25		Sie+Mot
	Q..0203	50.03.0436	BC 237 B	BC 541 B	Mot+Ph+Sie+Tf
	Q..0204	50.03.0516	BC 337	See Note 1	Sie
	Q..0205	50.03.0516	BC 337	See Note 1	Sie
	Q..0206	50.03.0351	BC 327-25		Sie+Mot
	Q..0207	50.03.0516	BC 337	See Note 1	Sie
	Q..0208	50.03.0516	BC 337	See Note 1	Sie
	Q..0209	50.03.0516	BC 337	See Note 1	Sie
	Q..0210	50.03.0448	BC 516		Sie+TI
	Q..0211	50.03.0448	BC 516		Sie+TI
	Q..0212	50.03.0516	BC 337	See Note 1	Sie
	Q..0213	50.03.0451	BD 139		Ph
	Q..0214	50.03.0452	BD 140		Ph
	Q..0215	50.03.0504	BD 679		SGS+Ph
	Q..0216	50.03.0505	BD 680		SGS+Ph
	Q..0217	50.03.0504	BD 679		SGS+Ph
	Q..0218	50.03.0505	BD 680		SGS+Ph
	Q..0219	50.03.0451	BD 139		Ph
	Q..0220	50.03.0452	BD 140		Ph
	R..0201	57.11.4479	47 Ohm	5%	
	R..0202	57.11.4472	4.7 kOhm	5%	
	R..0203	57.11.4102	1 kOhm	5%	
	R..0204	57.11.4105	1 MOhm	5%	
	R..0205	57.11.4152	1.5 kOhm	5%	
	R..0206	57.11.3682	6.8 kOhm	1%	
	R..0207	57.11.3682	6.8 kOhm	1%	
	R..0208	57.11.3682	6.8 kOhm	1%	
	R..0209	57.11.3682	6.8 kOhm	1%	
	R..0210	57.11.3103	10 kOhm	1%	
	R..0211	57.11.3472	4.7 kOhm	1%	
	R..0212	57.11.3472	4.7 kOhm	1%	
	R..0213	57.11.3103	10 kOhm	1%	
	R..0214	57.11.4102	1 kOhm	5%	

S T U D E R (00) 85/04/09 BBT LINE OUTPUT AMPLIFIER 1.820.862.00

IND.	POS.NO.	PART NO.	VALUE	SPECIFICATIONS / EQUIVALENT	MANUF.
	R..0215	57.11.4152	1.5 kOhm	5%	
	R..0216	57.11.3153	15 kOhm	1%	
	R..0217	57.11.3682	6.8 kOhm	1%	
	R..0218	57.11.4102	1 kOhm	5%	
	R..0219	57.11.4102	1 kOhm	5%	
	R..0220	57.11.3682	6.8 kOhm	1%	
	R..0221	57.11.3153	15 kOhm	1%	
	R..0222	57.11.4221	220 Ohm	5%	
	R..0223	57.11.4334	330 kOhm	5%	
	R..0224	57.11.4102	1 kOhm	5%	
	R..0225	57.19.0100	10 Ohm	5%	See Note 2
	R..0226	57.11.4479	4.7 Ohm	5%	
	R..0227	57.11.3222	2.2 kOhm	1%	
	R..0228	57.11.3132	1.3 kOhm	1%	
	R..0229	57.11.4470	47 Ohm	5%	
	R..0230	57.19.0100	10 Ohm	5%	See Note 2
	R..0231	57.11.4479	4.7 Ohm	5%	
	R..0232	57.11.3222	2.2 kOhm	1%	
	R..0233	57.11.3132	1.3 kOhm	1%	
	R..0234	57.11.4223	22 kOhm	5%	
	R..0235	57.11.4223	22 kOhm	5%	
	R..0236	57.11.4821	820 Ohm	5%	
	R..0237	57.11.4220	22 Ohm	5%	
	R..0238	57.11.4683	68 kOhm	5%	
	R..0239	57.11.4683	68 kOhm	5%	
	R..0240	57.11.4821	820 Ohm	5%	
	R..0241	57.11.4220	22 Ohm	5%	
	R..0242	57.11.4223	22 kOhm	5%	
	R..0243	57.11.4223	22 kOhm	5%	
	R..0244	57.11.4333	33 kOhm	5%	
	R..0245	57.11.4333	33 kOhm	5%	
	R..0246	57.19.0100	10 Ohm	5%	See Note 2
	R..0247	57.19.0100	10 Ohm	5%	See Note 2
	R..0248	57.11.4100	10 Ohm	5%	
	R..0249	57.11.4100	10 Ohm	5%	
	R..0250	57.11.4333	33 kOhm	5%	
	R..0251	57.11.4273	27 kOhm	5%	
	R..0252	57.99.0220	11.2 kOhm		See Note 3
	R..0253	57.11.4100	10 Ohm	5%	
	R..0254	57.11.4100	10 Ohm	5%	
	R..0255	57.11.4333	33 kOhm	5%	
	R..0256	57.11.4273	27 kOhm	5%	
	R..0257	57.11.4101	100 Ohm	5%	
	R..0258	57.11.4472	4.7 kOhm	5%	
	R..0259	57.19.0100	10 Ohm	5%	See Note 2
	R..0260	57.19.0100	10 Ohm	5%	See Note 2
	R..0261	57.11.4271	270 Ohm	5%	
	R..0262	57.11.4101	100 Ohm	5%	
	R..0263	57.11.4472	4.7 kOhm	5%	
	R..0264	57.19.0100	10 Ohm	5%	See Note 2
	R..0265	57.19.0100	10 Ohm	5%	See Note 2
	R..0266	57.11.4271	270 Ohm	5%	

Note 1 - Should be replaced as set. (04, 05, 09 matched) or (07, 08, 012 matched)

Note 2 - Has to be replaced by Originaltype or Philips-Type Nr. 2322 205 13109

Note 3 - NTC Thermistor Philips-Nr. 2322 640 90005

Cer=Ceramic, El=Electrolytic, PETP=Polyesterfilm, Sal=Solid-Aluminium.

MANUFACTURER: EX=Exar, Mot=Motorola, NS=National Semiconductor, Ph=Philips, Ra=Raytheon, SGS=SGS/Ates, Sig=Signetics, St=Studer, Tf=Telefunken, TI=Texas Instruments.

ORIG 85/04/09

S T U D E R (00) 85/04/09 BBT LINE OUTPUT AMPLIFIER 1.820.862.00

REPRODUCE AMPLIFIER PCB 1.820.710–00/–81/–82 GR20 EL 10/15 "ESE"

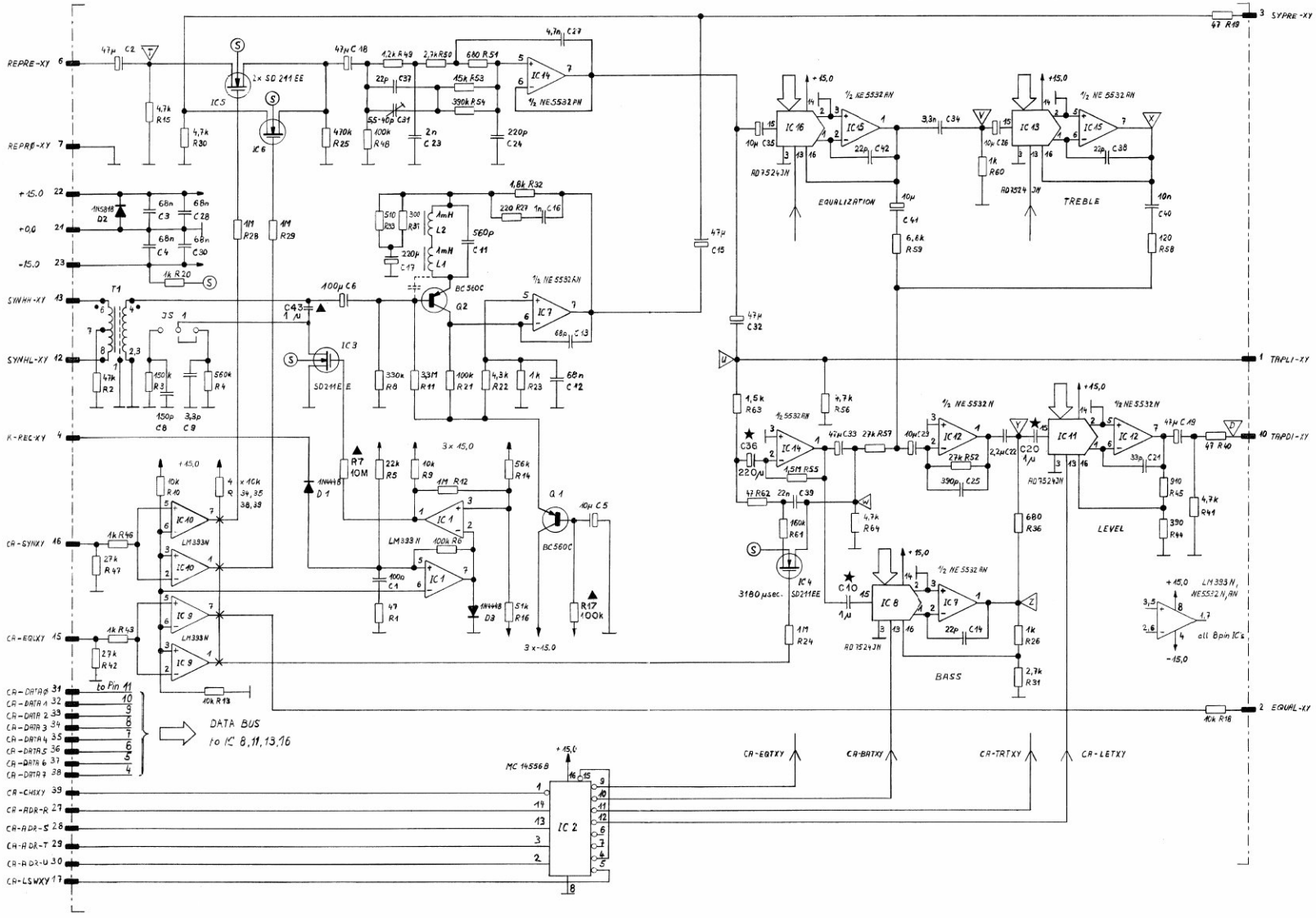

★ HAS BEEN MODIFIED FOR 1.820.710–81/–82
▲ HAS BEEN MODIFIED FOR 1.820.710–82

REPRODUCE AMPLIFIER PCB 1.820.710–00 GR20 EL10/15 "ESE"

REPRODUCE AMPLIFIER 1.820.710

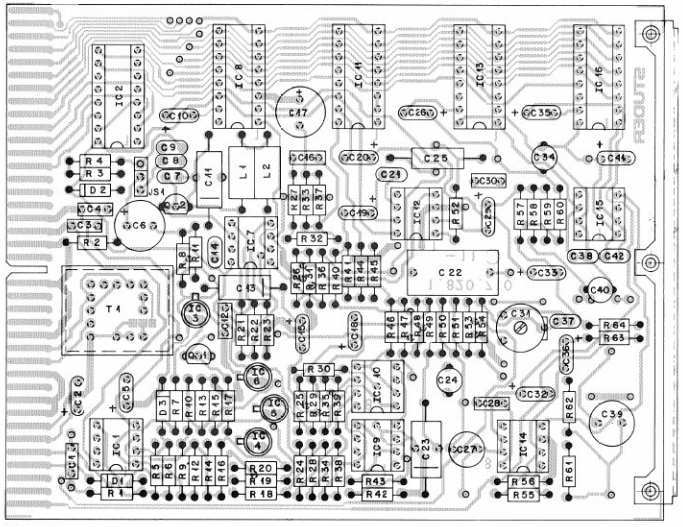

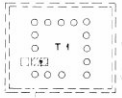

IND.	POS.NO.	PART NO.	VALUE	SPECIFICATIONS / EQUIVALENT	MANUF.
	C..0001	59.06.5104	0.1 uF	5%, 63V, PETP	
	C..0002	59.26.0470	47 uF	-20%, 6.3V, Sal	Ph
	C..0003	59.99.0205	68 nF	-20%, 63V, Cer	
	C..0004	59.99.0205	68 nF	-20%, 63V, Cer	
	C..0005	59.26.2100	10 uF	-20%, 16V, Sal	Ph
	C..0006	59.22.5101	100 uF	-20%, 25V, EL	
	C..0007		not used		
	C..0008	59.34.2151	150 pF	2%, N150, Cer	
	C..0009	59.34.0339	3.3 pF	5%, N150, Cer	
	C..0010	59.26.2100	10 uF	-20%, 16V, Sal	Ph
	C..0011	59.12.7561	560 pF	1%, 63V, PS	
	C..0012	59.99.0205	68 nF	-20%, 63V, Cer	
	C..0013	59.04.4680	68 pF	5%, 63V, PP	
	C..0014	59.34.2220	22 pF	5%, N150, Cer	
	C..0015	59.26.0470	47 uF	-20%, 6.3V, Sal	Ph
	C..0016	59.06.3102	1 nF	10%, 63V, PETP	
	C..0017	59.22.2221	220 uF	-10%, 6V, EL	
	C..0018	59.26.0470	47 uF	-20%, 6.3V, Sal	Ph
	C..0019	59.26.0470	47 uF	-20%, 6.3V, Sal	Ph
	C..0020	59.26.2100	10 uF	-20%, 16V, Sal	Ph
	C..0021	59.34.2330	33 pF	5%, N150, Cer	
	C..0022	59.02.2225	2.2 uF	5%, 63V, MPC	
	C..0023	59.12.7202	2 nF	1%, 63V, PS	
	C..0024	59.05.1221	220 pF	1%, 63V, PP	
	C..0025	59.12.7391	390 pF	1%, 63V, PS	
	C..0026	59.26.2100	10 uF	-20%, 16V, Sal	Ph
	C..0027	59.05.1472	4.7 nF	1%, 63V, PP	
	C..0028	59.99.0205	68 nF	-20%, 63V, Cer	
	C..0029	59.26.2100	10 uF	-20%, 16V, Sal	Ph
	C..0030	59.99.0205	68 nF	-20%, 63V, Cer	
	C..0031	59.18.0108	40 pF	Trimmer capacitor, Philips Nr 2222.808.32409	
	C..0032	59.26.0470	47 uF	-20%, 6.3V, Sal	Ph
	C..0033	59.26.0470	47 uF	-20%, 6.3V, Sal	Ph
	C..0034	59.05.1332	3.3 nF	1%, 63V, PP	
	C..0035	59.26.2100	10 uF	-20%, 16V, Sal	Ph
	C..0036	59.26.2100	10 uF	-20%, 16V, Sal	Ph
	C..0037	59.34.2220	22 pF	5%, N150, Cer	

S T U D E R 82/02/25 BBT REPRODUCE AMPLIFIER 1.820.710.00 PAGE 1

IND.	POS.NO.	PART NO.	VALUE	SPECIFICATIONS / EQUIVALENT	MANUF.
	C..0038	59.34.2220	22 pF	5%, N150, Cer	
	C..0039	59.05.1223	22 nF	1%, 63V, PP	
	C..0040	59.05.1103	10 nF	1%, 63V, PP	
	C..0041	59.26.2100	10 uF	-20%, 16V, Sal	Ph
	C..0042	59.34.2220	22 pF	5%, N150, Cer	
	D..0001	50.04.0125	1N 4448		
	D..0002	50.04.0512	1N 5818	1A, 30 V	
	D..0003	50.04.0125	1N 4448		
	IC.0001	50.05.0283	LM393N		NS,TI
	IC.0002	50.07.0004	CD4556B	MC 14 556B, 4556B	RCA,Mot,fc
	IC.0003	50.11.0106	SD211-EE	SD 210-EE	Sig
	IC.0004	50.11.0106	SD211-EE	SD 210-EE	Sig
	IC.0005	50.11.0106	SD211-EE	SD 210-EE	Sig
	IC.0006	50.11.0106	SD211-EE	SD 210-EE	Sig
	IC.0007	50.09.0106	NE5532N	XR5532N, 5532ANB	Sig,Ex,Ra
	IC.0008	50.07.0002	AD7524JN	MP 7524 JN	ADI,MpS
	IC.0009	50.05.0283	LM393N		NS,TI
	IC.0010	50.05.0283	LM393N		NS,TI
	IC.0011	50.07.0002	AD7524JN	MP 7524 JN	ADI,MpS
	IC.0012	50.09.0105	NE5532N	XR 5532 N, 5532 NB	Sig,Ex,Ra
	IC.0013	50.07.0002	AD7524JN	MP 7524 JN	ADI,MpS
	IC.0014	50.09.0106	NE5532N	XR 5532AN, 5532ANB	Sig,Ex,Ra
	IC.0015	50.09.0106	NE5532N	XR 5532AN, 5532ANB	Sig,Ex,Ra
	IC.0016	50.07.0002	AD7524JN	MP 7524 JN	ADI,MpS
	JS.0001			See note 1	
	L..0001	62.01.0128	1 mH	Gowanda Nr. 17-104, Delevan Nr. 1641-105	
	L..0002	62.01.0128	1 mH	Gowanda Nr. 17-104, Delevan Nr. 1641-105	
	Q..0001	50.03.0496	BC560		Sie,Mot,Ph,Tf
	Q..0002	50.03.0496	BC560		Sie,Mot,Ph,Tf
	R..0001	57.11.4470	47 Ohm	5%	
	R..0002	57.11.4473	47 kOhm	5%	

S T U D E R 82/02/25 BBT REPRODUCE AMPLIFIER 1.820.710.00 PAGE 2

IND.	POS.NO.	PART NO.	VALUE	SPECIFICATIONS / EQUIVALENT	MANUF.
	R..0003	57.11.4154	150 kOhm	2%	
	R..0004	57.11.4164	560 kOhm	2%	
	R..0005	57.11.4223	22 kOhm	2%	
	R..0006	57.11.4104	100 kOhm	5%	
	R..0007	57.11.4105	1 MOhm	5%	
	R..0008	57.11.4334	330 kOhm	2%	
	R..0009	57.11.4103	10 kOhm	5%	
	R..0010	57.11.4103	10 kOhm	5%	
	R..0011	57.11.4335	3.3 MOhm	2%	
	R..0012	57.11.4105	1 MOhm	5%	
	R..0013	57.11.4103	10 kOhm	5%	
	R..0014	57.11.4563	56 kOhm	2%	
	R..0015	57.11.4472	4.7 kOhm	5%	
	R..0016	57.11.3513	51 kOhm	1%	
	R..0017	57.11.4103	10 kOhm	5%	
	R..0018	57.11.4103	10 kOhm	5%	
	R..0019	57.11.4470	47 Ohm	5%	
	R..0020	57.11.4102	1 kOhm	5%	
	R..0021	57.11.4104	100 kOhm	2%	
	R..0022	57.11.3432	4.3 kOhm	1%	
	R..0023	57.11.4102	1 kOhm	2%	
	R..0024	57.11.4105	1 MOhm	5%	
	R..0025	57.11.4474	470 kOhm	5%	
	R..0026	57.11.4102	1 kOhm	2%	
	R..0027	57.11.4221	220 Ohm	5%	
	R..0028	57.11.4105	1 MOhm	5%	
	R..0029	57.11.4105	1 MOhm	5%	
	R..0030	57.11.4472	4.7 kOhm	5%	
	R..0031	57.11.4272	2.7 kOhm	2%	
	R..0032	57.11.4182	1.8 kOhm	2%	
	R..0033	57.11.3511	510 Ohm	2%	
	R..0034	57.11.4103	10 kOhm	5%	
	R..0035	57.11.4103	10 kOhm	5%	
	R..0036	57.11.4102	680 Ohm	2%	
	R..0037	57.11.3301	300 Ohm	2%	
	R..0038	57.11.4103	10 kOhm	5%	
	R..0039	57.11.4103	10 kOhm	5%	

S T U D E R 82/02/25 BBT REPRODUCE AMPLIFIER 1.820.710.00 PAGE 3

IND.	POS.NO.	PART NO.	VALUE	SPECIFICATIONS / EQUIVALENT	MANUF.
	R..0040	57.11.4470	47 Ohm	5%	
	R..0041	57.11.4472	4.7 kOhm	5%	
	R..0042	57.11.4273	27 kOhm	5%	
	R..0043	57.11.4102	1 kOhm	5%	
	R..0044	57.11.4391	390 Ohm	2%	
	R..0045	57.11.3911	910 Ohm	1%	
	R..0046	57.11.4102	1 kOhm	5%	
	R..0047	57.11.4273	27 kOhm	5%	
	R..0048	57.11.4104	100 kOhm	5%	
	R..0049	57.11.3122	1.2 kOhm	1%	
	R..0050	57.11.3272	2.7 kOhm	1%	
	R..0051	57.11.3681	680 Ohm	1%	
	R..0052	57.11.4273	27 kOhm	2%	
	R..0053	57.11.3153	15 kOhm	1%	
	R..0054	57.11.4394	390 kOhm	5%	
	R..0055	57.11.5155	1.5 MOhm	5%	
	R..0056	57.11.4472	4.7 kOhm	5%	
	R..0057	57.11.4273	27 kOhm	2%	
	R..0058	57.11.4121	120 Ohm	2%	
	R..0059	57.11.4682	6.8 kOhm	2%	
	R..0060	57.11.4102	1 kOhm	5%	
	R..0061	57.11.3164	160 kOhm	1%	
	R..0062	57.11.4470	47 Ohm	5%	
	R..0063	57.11.3152	1.5 kOhm	1%	
	R..0064	57.11.4472	4.7 kOhm	5%	

S T U D E R 82/02/25 BBT REPRODUCE AMPLIFIER 1.820.710.00 PAGE 4

IND.	POS.NO.	PART NO.	VALUE	SPECIFICATIONS / EQUIVALENT	MANUF.

Note 1 - Contact pin: Studer 54.01.0028, Berg 75 160-102-36
Bridge: Studer 54.01.0022, Philips 2422 024 88003

PETP=Polyesterfilm, Sal=Solid-Aluminium, Cer=Ceramic
PS=Polystyrol, PP=Polypropylen, El=Electrolytic
MPC=Metalized Polycarbonate

MANUFACTURER: ADI=Analog Devices Inc., Ex=Exar, Fc=Fairchild,
Mot=Motorola, MpS=Micropower Semiconductors,
NS=National Semiconductors, Ph=Philips, Ra=Raytheon,
RCA=Radio corp. of America, Sie=Siemens, Sig=Signetics,
Tf=Telefunken, TI=Texas Instruments.

ORIG 82/02/25

S T U D E R 82/02/25 BBT REPRODUCE AMPLIFIER 1.820.710.00 PAGE 5

REPRODUCE AMPLIFIER PCB 1.820.710–81 GR20 EL10/15 "ESE"

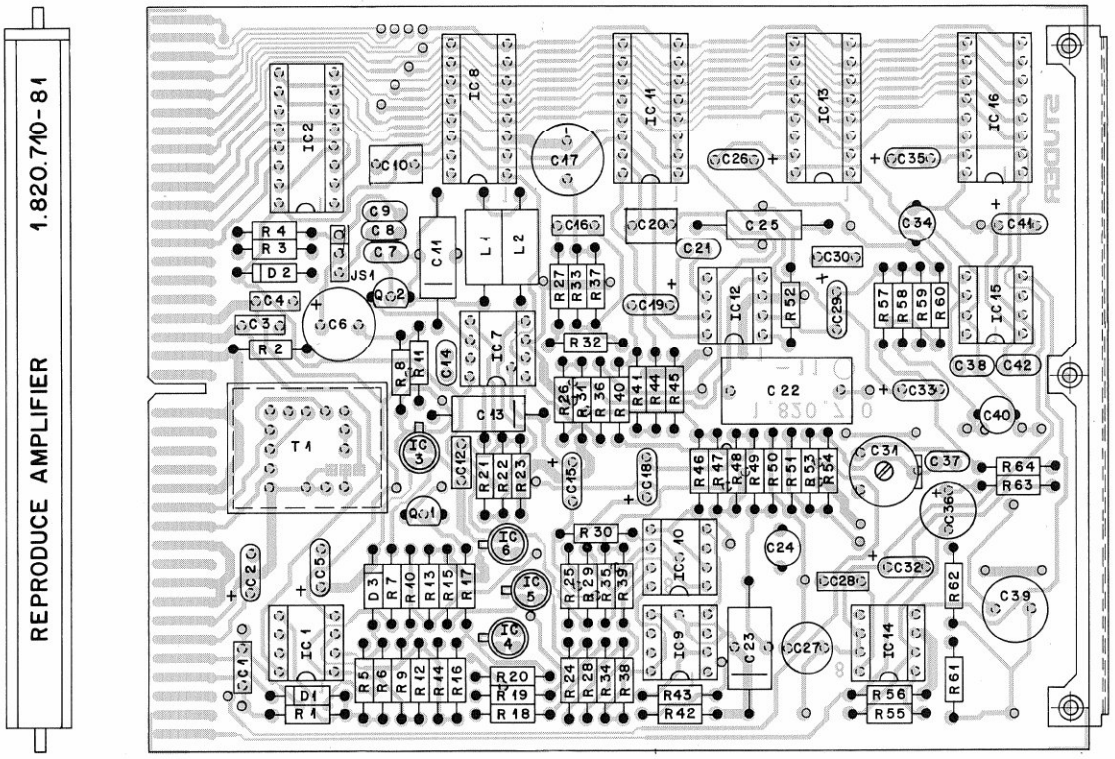

IND.	POS.NO.	PART NO.	VALUE	SPECIFICATIONS / EQUIVALENT	MANUF.
	C..0001	59.06.5104	0.1 uF	5%, 63V , PETP	
	C..0002	59.26.0470	47 uF	-20%, 6.3V , Sal	Ph
	C..0003	59.99.0205	68 nF	-20%, 63V , Cer	
	C..0004	59.99.0205	68 nF	-20%, 63V , Cer	
	C..0005	59.26.2100	10 uF	-20%, 16V , Sal	Ph
	C..0006	59.22.5101	100 uF	-20%, 25V , EL	
	C..0007		not used		
	C..0008	59.34.2151	150 pF	2%, N150 , Cer	
	C..0009	59.34.0339	3.3 pF	5%, N150 , Cer	
	C..0010	59.06.5105	1 uF	5%, PETP	
	C..0011	59.12.7561	560 pF	1%, 63V , PS	
	C..0012	59.99.0205	68 nF	-20%, 63V , Cer	
	C..0013	59.04.9680	68 pF	5%, 63V , PP	
	C..0014	59.34.2220	22 pF	5%, N150 , Cer	
	C..0015	59.26.0470	47 uF	-20%, 6.3V , Sal	Ph
	C..0016	59.06.0102	1 nF	10%, 63V , PETP	
	C..0017	59.22.2221	220 uF	-10%, 6V , EL	
	C..0018	59.26.0470	47 uF	-20%, 6.3V , Sal	Ph
	C..0019	59.26.0470	47 uF	-20%, 6.3V , Sal	Ph
	C..0020	59.06.5105	1 uF	5%, PETP	
	C..0021	59.34.2330	33 pF	5%, N150 , Cer	
	C..0022	59.02.2225	2.2 uF	5% 63V , MPC	
	C..0023	59.12.7202	2 nF	1%, 63V , PS	
	C..0024	59.05.1221	220 pF	1%, 63V , PP	
	C..0025	59.12.7391	390 pF	1%, 63V , PS	
	C..0026	59.26.2100	10 uF	-20%, 16V , Sal	Ph
	C..0027	59.05.1472	4.7 nF	1%, 63V , PP	
	C..0028	59.99.0205	68 nF	-20%, 63V , Cer	
	C..0029	59.26.2100	10 uF	-20%, 16V , Sal	Ph
	C..0030	59.99.0205	68 nF	-20%, 63V , Cer	
	C..0031	59.18.0108	40 pF	Trimmer Capacitor, Philips Nr 2222.808.32409	
	C..0032	59.26.0470	47 uF	-20%, 6.3V , Sal	Ph
	C..0033	59.26.0470	47 uF	-20%, 6.3V , Sal	Ph
	C..0034	59.05.1332	3.3 nF	1%, 63V , PP	
	C..0035	59.26.2100	10 uF	-20%, 16V , Sal	Ph
	C..0036	59.22.3221	220 uF	-20%, 10V , El	
	C..0037	59.34.2220	22 pF	5%, N150 , Cer	
	C..0038	59.34.2220	22 pF	5%, N150 , Cer	
	C..0039	59.05.1223	22 nF	1%, 63V , PP	
	C..0040	59.05.1103	10 nF	1%, 63V , PP	
	C..0041	59.26.2100	10 uF	-20%, 16V , Sal	Ph
	C..0042	59.34.2220	22 pF	5%, N150 , Cer	
	D..0001	50.04.0125	1N 4448		
	D..0002	50.04.0512	1N 5818	1A, 30 V	
	D..0003	50.04.0125	1N 4448		
	IC.0001	50.05.0283	LM393N		NS,TI
	IC.0002	50.07.0004	CD4556B	MC 14 556B, 4556B	RCA,Mot,Fc
	IC.0003	50.11.0106	SD211-EE	SD 210-EE	Sig
	IC.0004	50.11.0106	SD211-EE	SD 210-EE	Sig
	IC.0005	50.11.0106	SD211-EE	SD 210-EE	Sig
	IC.0006	50.11.0106	SD211-EE	SD 210-EE	Sig
	IC.0007	50.09.0106	NE5532AN	XR5532AN, 5532ANB	Sig,Ex,Ra
	IC.0008	50.07.0002	AD7524JN	MP 7524 JN	ADI,MpS
	IC.0009	50.05.0283	LM393N		NS,TI
	IC.0010	50.05.0283	LM393N		NS,TI
	IC.0011	50.07.0002	AD7524JN	MP 7524 JN	ADI,MpS
	IC.0012	50.09.0105	NE5532N	XR 5532 N, 5532 NB	Sig,Ex,Ra
	IC.0013	50.07.0002	AD7524JN	MP 7524 JN	ADI,MpS
	IC.0014	50.09.0106	NE5532AN	XR 5532AN, 5532ANB	Sig,Ex,Ra
	IC.0015	50.09.0106	NE5532AN	XR 5532AN, 5532ANB	Sig,Ex,Ra
	IC.0016	50.07.0002	AD7524JN	MP 7524 JN	ADI,MpS
	JS.0001			See note 1	
	L..0001	62.01.0128	1 mH	Gowanda Nr. 17-104, Delevan Nr. 1641-105	
	L..0002	62.01.0128	1 mH	Gowanda Nr. 17-104, Delevan Nr. 1641-105	
	Q..0001	50.03.0496	BC560		Sie,Mot,Ph,Tf
	Q..0002	50.03.0496	BC560		Sie,Mot,Ph,Tf
	R..0001	57.11.4470	47 Ohm	5%	
	R..0002	57.11.4473	47 kOhm	5%	

S T U D E R (00) 83/10/11 GAE REPRODUCE AMPLIFIER 1.820.710.81

IND.	POS.NO.	PART NO.	VALUE	SPECIFICATIONS / EQUIVALENT	MANUF.
	R..0003	57.11.4154	150 kOhm	2%	
	R..0004	57.11.4564	560 kOhm	2%	
	R..0005	57.11.4223	22 kOhm	2%	
	R..0006	57.11.4104	100 kOhm	5%	
	R..0007	57.11.4105	1 MOhm	5%	
	R..0008	57.11.4334	330 kOhm	2%	
	R..0009	57.11.4103	10 kOhm	5%	
	R..0010	57.11.4103	10 kOhm	5%	
	R..0011	57.11.4335	3.3 MOhm	2%	
	R..0012	57.11.4105	1 MOhm	5%	
	R..0013	57.11.4103	10 kOhm	5%	
	R..0014	57.11.4563	56 kOhm	2%	
	R..0015	57.11.4472	4.7 kOhm	5%	
	R..0016	57.11.3513	51 kOhm	1%	
	R..0017	57.11.4103	10 kOhm	5%	
	R..0018	57.11.4103	10 kOhm	5%	
	R..0019	57.11.4470	47 Ohm	5%	
	R..0020	57.11.4102	1 kOhm	5%	
	R..0021	57.11.4104	100 kOhm	2%	
	R..0022	57.11.3432	4.3 kOhm	1%	
	R..0023	57.11.4102	1 kOhm	2%	
	R..0024	57.11.4105	1 MOhm	5%	
	R..0025	57.11.4474	470 kOhm	5%	
	R..0026	57.11.4102	1 kOhm	2%	
	R..0027	57.11.4221	220 Ohm	5%	
	R..0028	57.11.4105	1 MOhm	5%	
	R..0029	57.11.4105	1 MOhm	5%	
	R..0030	57.11.4472	4.7 kOhm	5%	
	R..0031	57.11.4272	2.7 kOhm	2%	
	R..0032	57.11.4182	1.8 kOhm	2%	
	R..0033	57.11.3511	510 Ohm	2%	
	R..0034	57.11.4103	10 kOhm	5%	
	R..0035	57.11.4103	10 kOhm	5%	
	R..0036	57.11.4681	680 Ohm	2%	
	R..0037	57.11.3301	300 Ohm	2%	
	R..0038	57.11.4103	10 kOhm	5%	
	R..0039	57.11.4103	10 kOhm	5%	
	R..0040	57.11.4470	47 Ohm	5%	
	R..0041	57.11.4472	4.7 kOhm	5%	
	R..0042	57.11.4273	27 kOhm	5%	
	R..0043	57.11.4102	1 kOhm	5%	
	R..0044	57.11.4391	390 Ohm	2%	
	R..0045	57.11.3911	910 Ohm	1%	
	R..0046	57.11.4102	1 kOhm	5%	
	R..0047	57.11.4273	27 kOhm	5%	
	R..0048	57.11.4104	100 kOhm	5%	
	R..0049	57.11.3122	1.2 kOhm	1%	
	R..0050	57.11.3272	2.7 kOhm	1%	
	R..0051	57.11.3681	680 Ohm	1%	
	R..0052	57.11.4273	27 kOhm	2%	
	R..0053	57.11.3153	15 kOhm	1%	
	R..0054	57.11.4394	390 kOhm	5%	
	R..0055	57.11.5155	1.5 MOhm	5%	
	R..0056	57.11.4472	4.7 kOhm	5%	
	R..0057	57.11.4273	27 kOhm	2%	
	R..0058	57.11.4121	120 Ohm	2%	
	R..0059	57.11.4682	6.8 kOhm	2%	
	R..0060	57.11.4102	1 kOhm	5%	
	R..0061	57.11.3164	160 kOhm	1%	
	R..0062	57.11.4470	47 Ohm	5%	
	R..0063	57.11.3152	1.5 kOhm	1%	
	R..0064	57.11.4472	4.7 kOhm	5%	

Note 1 - Contact pin: Studer 54.01.0020, Berg 75 160-102-36
Bridge: Studer 54.01.0021, Philips 2422 024 88003

PETP=Polyesterfilm, Sal=Solid-Aluminium, Cer=Ceramic
PS=Polystyrol, PP=Polypropylen, El=Electrolytic
MPC=Metalized Polycarbonate

MANUFACTURER: ADI=Analog Devices Inc., Ex=Exar, Fc=Fairchild,
Mot=Motorola, MpS=Micropower Semiconductors,
NS=National Semiconductors, Ph=Philips, Ra=Raytheon,
RCA=Radio Corp. of America, Sie=Siemens, Sig=Signetics,
Tf=Telefunken, TI=Texas Instruments.

ORIG 83/10/11

S T U D E R (00) 83/10/11 GAE REPRODUCE AMPLIFIER 1.820.710.81

REPRODUCE AMPLIFIER PCB 1.820.710–82 GR20 EL10/15 "ESE"

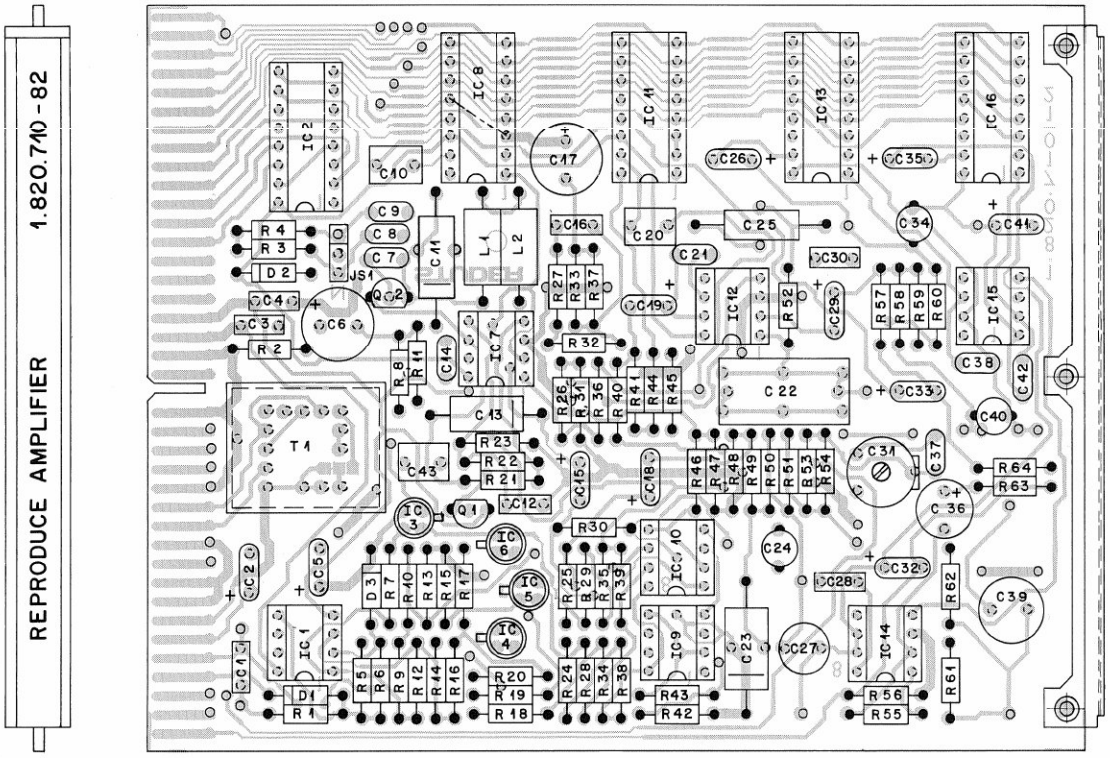

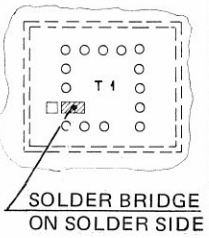

IND.	POS.NO.	PART NO.	VALUE	SPECIFICATIONS / EQUIVALENT	MANUF.
	C..0001	59.06.5104	0.1 uF	5%, 63V , PETP	
	C..0002	59.26.0470	47 uF	-20%, 6.3V , Sal	Ph
	C..0003	59.99.0205	68 nF	-20%, 63V , Cer	
	C..0004	59.99.0205	68 nF	-20%, 63V , Cer	
	C..0005	59.26.2100	10 uF	-20%, 16V , Sal	Ph
	C..0006	59.22.5101	100 uF	-20%, 25V , EL	
	C..0007	not used			
	C..0008	59.34.2151	150 pF	2%, N150 , Cer	
	C..0009	59.34.0339	3.3 pF	5%, N150 , Cer	
	C..0010	59.06.5105	1 uF	5%, PETP	
	C..0011	59.12.7561	560 pF	1%, 63V , PS	
	C..0012	59.99.0205	68 nF	-20%, 63V , Cer	
	C..0013	59.04.9680	68 pF	5%, 63V , PP	
	C..0014	59.34.2220	22 pF	5%, N150 , Cer	
	C..0015	59.26.0470	47 uF	-20%, 6.3V , Sal	Ph
	C..0016	59.06.0102	1 nF	10%, 63V , PETP	
	C..0017	59.22.2221	220 uF	-10%, 6V , EL	
	C..0018	59.26.0470	47 uF	-20%, 6.3V , Sal	Ph
	C..0019	59.26.0470	47 uF	-20%, 6.3V , Sal	Ph
	C..0020	59.06.5105	1 uF	5%, PETP	
	C..0021	59.34.2330	33 pF	5%, N150 , Cer	
	C..0022	59.02.2225	2.2 uF	5% 63V , MPC	
	C..0023	59.12.7202	2 nF	1%, 63V , PS	
	C..0024	59.05.1221	220 pF	1%, 63V , PP	
	C..0025	59.12.7391	390 pF	1%, 63V , PS	
	C..0026	59.26.2100	10 uF	-20%, 16V , Sal	Ph
	C..0027	59.05.1472	4.7 nF	1%, 63V , PP	
	C..0028	59.99.0205	68 nF	-20%, 63V , Cer	
	C..0029	59.26.2100	10 uF	-20%, 16V , Sal	Ph
	C..0030	59.99.0205	68 nF	-20%, 63V , Cer	
	C..0031	59.18.0108	40 pF	Trimmer capacitor, Philips Nr 2222.808.32409	
	C..0032	59.26.0470	47 uF	-20%, 6.3V , Sal	Ph
	C..0033	59.26.0470	47 uF	-20%, 6.3V , Sal	Ph
	C..0034	59.05.1332	3.3 nF	1%, 63V , PP	
	C..0035	59.26.2100	10 uF	-20%, 16V , Sal	Ph
	C..0036	59.22.3221	220 uF	-20%, 10V , El	
	C..0037	59.34.2220	22 pF	5%, N150 , Cer	
	C..0038	59.34.2220	22 pF	5%, N150 , Cer	
	C..0039	59.05.1223	22 nF	1%, 63V , PP	
	C..0040	59.05.1103	10 nF	1%, 63V , PP	
	C..0041	59.26.2100	10 uF	-20%, 16V , Sal	Ph
	C..0042	59.34.2220	22 pF	5%, N150 , Cer	
	C..0043	59.06.5105	1 uF	5%, PETP	
	D..0001	50.04.0125	1N 4448		
	D..0002	50.04.0512	1N 5818	1A, 30 V	
	D..0003	50.04.0125	1N 4448		
	IC.0001	50.05.0283	LM393N		NS,TI
	IC.0002	50.07.0004	CD4556B	MC 14 556B, 4556B	RCA,Mot,Fc
	IC.0003	50.11.0106	SD 214 DE	BSD 214	Ph,Six
	IC.0004	50.11.0106	SD 214 DE	BSD 214	Ph,Six
	IC.0005	50.11.0106	SD 214 DE	BSD 214	Ph,Six
	IC.0006	50.11.0106	SD 214 DE	BSD 214	Ph,Six
	IC.0007	50.09.0106	NE5532AN	XR5532AN, 5532ANB	Sig,Ex,Ra
	IC.0008	50.07.0002	AD7524JN	MP 7524 JN	ADI,MpS
	IC.0009	50.05.0283	LM393N		NS,TI
	IC.0010	50.05.0283	LM393N		NS,TI
	IC.0011	50.07.0002	AD7524JN	MP 7524 JN	ADI,MpS
	IC.0012	50.09.0105	NE5532N	XR 5532 N, 5532 NB	Sig,Ex,Ra
	IC.0013	50.07.0002	AD7524JN	MP 7524 JN	ADI,MpS
	IC.0014	50.09.0106	NE5532AN	XR 5532AN, 5532ANB	Sig,Ex,Ra
	IC.0015	50.09.0106	NE5532AN	XR 5532AN, 5532ANB	Sig,Ex,Ra
	IC.0016	50.07.0002	AD7524JN	MP 7524 JN	ADI,MpS
	JS.0001			See note 1	
	L..0001	62.01.0128	1 mH	Gowanda Nr. 17-104, Delevan Nr. 1641-105	
	L..0002	62.01.0128	1 mH	Gowanda Nr. 17-104, Delevan Nr. 1641-105	
	Q..0001	50.03.0496	BC560		Sie,Mot,Ph,Tf
	Q..0002	50.03.0496	BC560		Sie,Mot,Ph,Tf
	R..0001	57.11.4470	47 Ohm	5%	

IND.	POS.NO.	PART NO.	VALUE	SPECIFICATIONS / EQUIVALENT	MANUF.
	R..0002	57.11.4473	47 kOhm	5%	
	R..0003	57.11.4154	150 kOhm	2%	
	R..0004	57.11.4564	560 kOhm	2%	
	R..0005	57.11.4223	22 kOhm	2%	
	R..0006	57.11.4104	100 kOhm	5%	
	R..0007	57.11.4106	10 MOhm	5%	
	R..0008	57.11.4334	330 kOhm	2%	
	R..0009	57.11.4103	10 kOhm	5%	
	R..0010	57.11.4103	10 kOhm	5%	
	R..0011	57.11.4335	3.3 MOhm	2%	
	R..0012	57.11.4105	1 MOhm	5%	
	R..0013	57.11.4103	10 kOhm	5%	
	R..0014	57.11.4563	56 kOhm	2%	
	R..0015	57.11.4472	4.7 kOhm	5%	
	R..0016	57.11.3513	51 kOhm	1%	
	R..0017	57.11.4104	100 kOhm	5%	
	R..0018	57.11.4103	10 kOhm	5%	
	R..0019	57.11.4470	47 Ohm	5%	
	R..0020	57.11.4102	1 kOhm	5%	
	R..0021	57.11.4104	100 kOhm	2%	
	R..0022	57.11.3432	4.3 kOhm	1%	
	R..0023	57.11.4102	1 kOhm	2%	
	R..0024	57.11.4105	1 MOhm	5%	
	R..0025	57.11.4474	470 kOhm	5%	
	R..0026	57.11.4102	1 kOhm	2%	
	R..0027	57.11.4221	220 Ohm	5%	
	R..0028	57.11.4105	1 MOhm	5%	
	R..0029	57.11.4105	1 MOhm	5%	
	R..0030	57.11.4472	4.7 kOhm	5%	
	R..0031	57.11.4272	2.7 kOhm	2%	
	R..0032	57.11.4182	1.8 kOhm	2%	
	R..0033	57.11.3511	510 Ohm	2%	
	R..0034	57.11.4103	10 kOhm	5%	
	R..0035	57.11.4103	10 kOhm	5%	
	R..0036	57.11.4681	680 Ohm	2%	
	R..0037	57.11.3301	300 Ohm	2%	
	R..0038	57.11.4103	10 kOhm	5%	
	R..0039	57.11.4103	10 kOhm	5%	
	R..0040	57.11.4470	47 Ohm	5%	
	R..0041	57.11.4472	4.7 kOhm	5%	
	R..0042	57.11.4273	27 kOhm	5%	
	R..0043	57.11.4102	1 kOhm	5%	
	R..0044	57.11.4391	390 Ohm	2%	
	R..0045	57.11.3911	910 Ohm	1%	
	R..0046	57.11.4102	1 kOhm	5%	
	R..0047	57.11.4273	27 kOhm	5%	
	R..0048	57.11.4104	100 kOhm	5%	
	R..0049	57.11.3122	1.2 kOhm	1%	
	R..0050	57.11.3272	2.7 kOhm	1%	
	R..0051	57.11.3681	680 Ohm	1%	
	R..0052	57.11.4273	27 kOhm	2%	
	R..0053	57.11.3153	15 kOhm	1%	
	R..0054	57.11.4394	390 kOhm	5%	
	R..0055	57.11.5155	1.5 MOhm	5%	
	R..0056	57.11.4472	4.7 kOhm	5%	
	R..0057	57.11.4273	27 kOhm	2%	
	R..0058	57.11.4121	120 Ohm	2%	
	R..0059	57.11.4682	6.8 kOhm	2%	
	R..0060	57.11.4102	1 kOhm	5%	
	R..0061	57.11.3164	160 kOhm	1%	
	R..0062	57.11.4470	47 Ohm	5%	
	R..0063	57.11.3152	1.5 kOhm	1%	
	R..0064	57.11.4472	4.7 kOhm	5%	

Note 1 - Contact pin: Studer 54.01.0020, Berg 75 160-102-36
Bridge: Studer 54.01.0021, Philips 2422 024 88003

PETP=Polyesterfilm, Sal=Solid-Aluminium, Cer=Ceramic
PS=Polystyrol, PP=Polypropylen, El=Electrolytic
MPC=Metalized Polycarbonate

MANUFACTURER: ADI=Analog Decices Inc., Ex=Exar, Fc=Fairchild,
Mot=Motorola, MpS=Micropower Semiconductors,
NS=National Semiconductors, Ph=Philips, Ra=Raytheon,
RCA=Radio corp. of America, Sie=Siemens, Sig=Signetics,
Six=Siliconix, Tf=Telefunken, TI=Texas Instruments.

ORIG 83/10/12

S T U D E R (00) 83/10/12 BBT REPRODUCE AMPLIFIER 1.820.710.82

S T U D E R (00) 83/10/12 BBT REPRODUCE AMPLIFIER 1.820.710.82

REPRODUCE AMPLIFIER PCB 1.820.710-83 GR20 EL10/15 "ESE"

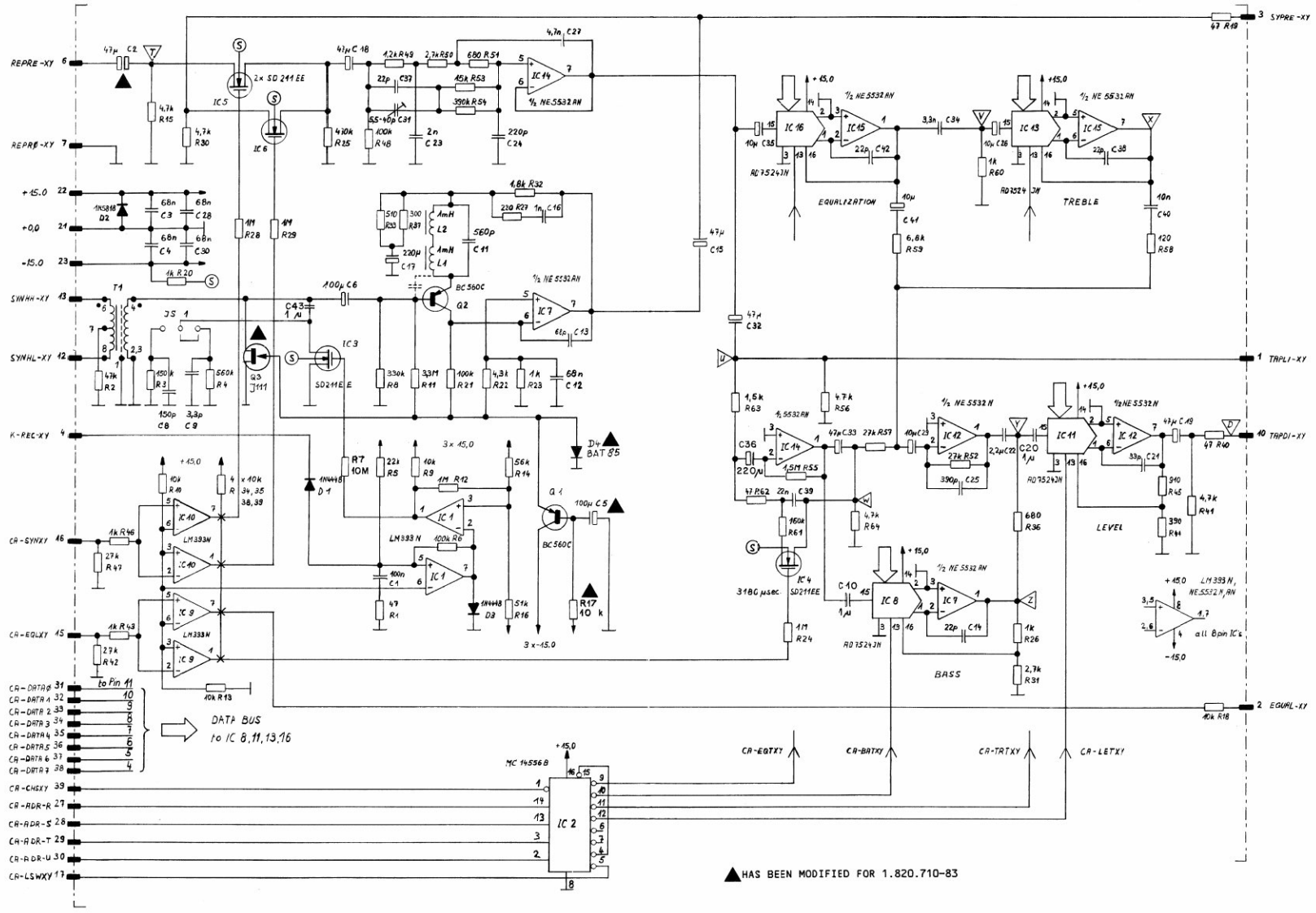

REPRODUCE AMPLIFIER PCB 1.820.710-83 GR20 EL10/15 "ESE"

COMPONENT SIDE

REPRODUCE AMPLIFIER 1.820.710-83

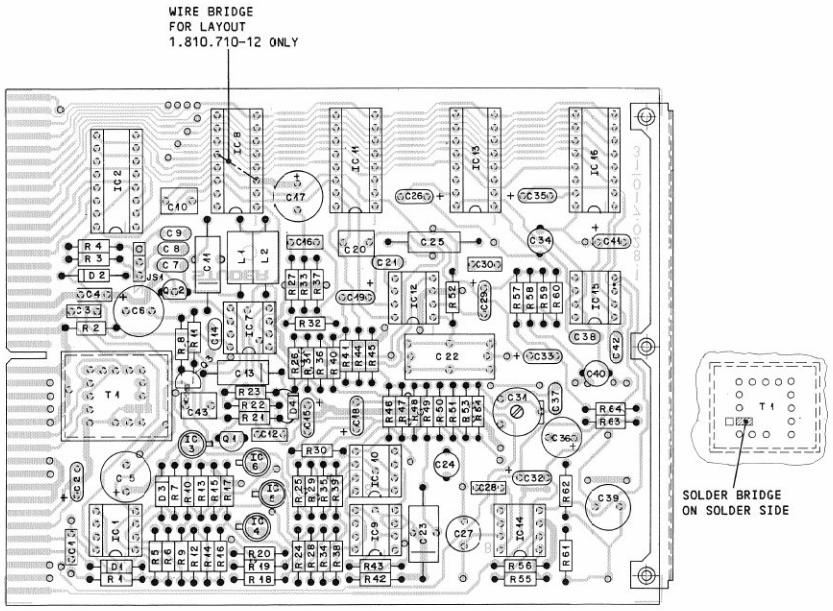

IND.	POS.NO.	PART NO.	VALUE	SPECIFICATIONS / EQUIVALENT	MANUF.
	C..0001	59.06.5104	0.1 uF	5%, 63V , PETP	
(00)	C..0002	59.26.0470	47 uF	-20%, 6.3V , Sal	Ph
	C..0002	59.99.0401	47 uF	-20%, 16V , El bipolar	
	C..0003	59.06.0683	68 nF	10%, 63V , PETP	
	C..0004	59.06.0683	68 nF	10%, 63V , PETP	
	C..0005	59.22.5101	100 uF	-20%, 25V , El	
	C..0006	59.22.5101	100 uF	-20%, 25V , El	
	C..0007		not used		
	C..0008	59.34.2151	150 pF	2%, N150 , Cer	
	C..0009	59.34.0339	3.3 pF	5%, N150 , Cer	
	C..0010	59.06.5105	1 uF	5%, PETP	
	C..0011	59.12.7561	560 pF	1%, 63V , PS	
	C..0012	59.06.0683	68 nF	10%, 63V , PETP	
	C..0013	59.04.9680	68 pF	5%, 63V , PP	
	C..0014	59.34.2220	22 pF	5%, N150 , Cer	
	C..0015	59.26.0470	47 uF	-20%, 6.3V , Sal	Ph
	C..0016	59.06.0102	1 nF	10%, 63V , PETP	
	C..0017	59.22.2221	220 uF	-10%, 4V , El	
	C..0018	59.26.0470	47 uF	-20%, 6.3V , Sal	Ph
	C..0019	59.26.0470	47 uF	-20%, 6.3V , Sal	Ph
	C..0020	59.06.5105	1 uF	5%, PETP	
	C..0021	59.34.2330	33 pF	5%, N150 , Cer	
	C..0022	59.02.2225	2.2 uF	5%, 63V , MPC	
	C..0023	59.12.7202	2 nF	1%, 63V , PS	
	C..0024	59.05.1221	220 pF	1%, 63V , PP	
	C..0025	59.12.7391	390 pF	1%, 63V , PS	
	C..0026	59.26.2100	10 uF	-20%, 16V , Sal	Ph
	C..0027	59.05.1472	4.7 nF	1%, 63V , PP	
	C..0028	59.06.0683	68 nF	10%, 63V , PETP	
	C..0029	59.26.2100	10 uF	-20%, 16V , Sal	Ph
	C..0030	59.06.0683	68 nF	10%, 63V , PETP	
	C..0031	59.18.0108	40 pF	trimmer capacitor, Philips Nr 2222.808.32409	
	C..0032	59.26.0470	47 uF	-20%, 6.3V , Sal	Ph
	C..0033	59.26.0470	47 uF	-20%, 6.3V , Sal	Ph
	C..0034	59.05.1332	3.3 nF	1%, 63V , PP	
	C..0035	59.26.2100	10 uF	-20%, 16V , Sal	Ph
	C..0036	59.22.3221	220 uF	-20%, 16V , El	

IND.	POS.NO.	PART NO.	VALUE	SPECIFICATIONS / EQUIVALENT	MANUF.
	C..0037	59.34.2220	22 pF	5%, N150 , Cer	
	C..0038	59.34.2220	22 pF	5%, N150 , Cer	
	C..0039	59.05.1223	22 nF	1%, 63V , PP	
	C..0040	59.05.1103	10 nF	1%, 63V , PP	
	C..0041	59.26.2100	10 uF	-20%, 16V , Sal	Ph
	C..0042	59.34.2220	22 pF	5%, N150 , Cer	
	C..0043	59.06.5105	1 uF	5%, 50V , PETP	
	D..0001	50.04.3125	1N 4448		
	D..0002	50.04.3512	1N 5818	1N5819	Mot
	D..0003	50.04.3125	1N 4448		
	D..0004	50.04.3127	BAT 85	BA540-02, BAT 42	Ph,Sie,Tho-CSF
	IC.0001	50.05.3263	LM393N		NS,TI
	IC.0002	50.07.2004	CD4556B	MC 14 556B, 4556B	RCA,Mot,FC
	IC.0003	50.11.3106	SD 214 DE	BSD 214	Ph,Six
	IC.0004	50.11.3106	SD 214 DE	BSD 214	Ph,Six
	IC.0005	50.11.3106	SD 214 DE	BSD 214	Ph,Six
	IC.0006	50.11.3106	SD 214 DE	BSD 214	Ph,Six
	IC.0007	50.09.3106	NE5532AN	XR5532AN, 5532ANB	Sig,Ex,Ra
	IC.0008	50.07.0002	AD7524JN	MP 7524 JN	ADI,MpS
	IC.0009	50.05.2263	LM393N		NS,TI
	IC.0010	50.05.3263	LM393N		NS,TI
	IC.0011	50.07.0002	AD7524JN	MP 7524 JN	ADI,MpS
	IC.0012	50.09.3105	NE5532N	XR 5532 N, 5532 NB	Sig,Ex,Ra
	IC.0013	50.07.0002	AD7524JN	MP 7524 JN	ADI,MpS
	IC.0014	50.09.3106	NE5532AN	XR 5532AN, 5532ANB	Sig,Ex,Ra
	IC.0015	50.09.3106	NE5532AN	XR 5532AN, 5532ANB	Sig,Ex,Ra
	IC.0016	50.07.0002	AD7524JN	MP 7524 JN	ADI,MpS
	JS.0001			See note 1	
	L..0001	62.01.0128	1 mH	Gowanda Nr. 17-104, Delevan Nr. 1641-105	
	L..0002	62.01.0128	1 mH	Gowanda Nr. 17-104, Delevan Nr. 1641-105	
	Q..0001	50.03.0496	BC560		Sie,Mot,Ph,Tf
	Q..0002	50.03.0496	BC560		Sie,Mot,Ph,Tf

IND.	POS.NO.	PART NO.	VALUE	SPECIFICATIONS / EQUIVALENT	MANUF.
	Q..0003	50.03.0216	J 111		Six
	R..0001	57.11.4470	47 Ohm	5%	
	R..0002	57.11.4473	47 kOhm	5%	
	R..0003	57.11.4154	150 kOhm	2%	
	R..0004	57.11.4564	560 kOhm	2%	
	R..0005	57.11.4223	22 kOhm	2%	
	R..0006	57.11.4104	100 kOhm	5%	
	R..0007	57.11.4106	10 MOhm	5%	
	R..0008	57.11.4334	330 kOhm	2%	
	R..0009	57.11.4103	10 kOhm	5%	
	R..0010	57.11.4103	10 kOhm	5%	
	R..0011	57.11.4335	3.3 MOhm	2%	
	R..0012	57.11.4105	1 MOhm	5%	
	R..0013	57.11.4103	10 kOhm	5%	
	R..0014	57.11.4563	56 kOhm	2%	
	R..0015	57.11.4472	4.7 kOhm	5%	
	R..0016	57.11.3513	51 kOhm	1%	
	R..0017	57.11.4103	10 kOhm	5%	
	R..0018	57.11.4103	10 kOhm	5%	
	R..0019	57.11.4470	47 Ohm	5%	
	R..0020	57.11.4102	1 kOhm	5%	
	R..0021	57.11.4104	100 kOhm	2%	
	R..0022	57.11.3432	4.3 kOhm	1%	
	R..0023	57.11.4102	1 kOhm	2%	
	R..0024	57.11.4105	1 MOhm	5%	
	R..0025	57.11.4474	470 kOhm	5%	
	R..0026	57.11.4102	1 kOhm	2%	
	R..0027	57.11.4221	220 Ohm	5%	
	R..0028	57.11.4105	1 MOhm	5%	
	R..0029	57.11.4105	1 MOhm	5%	
	R..0030	57.11.4472	4.7 kOhm	5%	
	R..0031	57.11.4272	2.7 kOhm	2%	
	R..0032	57.11.4182	1.8 kOhm	2%	
	R..0033	57.11.4511	510 Ohm	2%	
	R..0034	57.11.4103	10 kOhm	5%	
	R..0035	57.11.4103	10 kOhm	5%	

IND.	POS.NO.	PART NO.	VALUE	SPECIFICATIONS / EQUIVALENT	MANUF.
	R..0036	57.11.4681	680 Ohm	2%	
	R..0037	57.11.3301	300 Ohm	2%	
	R..0038	57.11.4103	10 kOhm	5%	
	R..0039	57.11.4103	10 kOhm	5%	
	R..0040	57.11.4470	47 Ohm	5%	
	R..0041	57.11.4472	4.7 kOhm	5%	
	R..0042	57.11.4273	27 kOhm	5%	
	R..0043	57.11.4102	1 kOhm	5%	
	R..0044	57.11.4391	390 Ohm	2%	
	R..0045	57.11.3911	910 Ohm	1%	
	R..0046	57.11.4102	1 kOhm	5%	
	R..0047	57.11.4273	27 kOhm	5%	
	R..0048	57.11.4104	100 kOhm	5%	
	R..0049	57.11.3122	1.2 kOhm	1%	
	R..0050	57.11.3272	2.7 kOhm	1%	
	R..0051	57.11.3681	680 Ohm	1%	
	R..0052	57.11.4273	27 kOhm	2%	
	R..0053	57.11.3153	15 kOhm	1%	
	R..0054	57.11.4394	390 kOhm	5%	
	R..0055	57.11.5155	1.5 MOhm	5%	
	R..0056	57.11.4472	4.7 kOhm	5%	
	R..0057	57.11.4273	27 kOhm	2%	
	R..0058	57.11.4121	120 Ohm	2%	
	R..0059	57.11.4682	6.8 kOhm	2%	
	R..0060	57.11.4102	1 kOhm	5%	
	R..0061	57.11.3164	160 kOhm	1%	
	R..0062	57.11.4470	47 Ohm	5%	
	R..0063	57.11.3152	1.5 kOhm	1%	
	R..0064	57.11.4472	4.7 kOhm	5%	

Note 1 - Contact pint Studer 54.01.002), Berg 75 160-102-36
Bridge: Studer 54.01.002), Philips 2422 024 88003

PETP=Polyesterfilm, Sal=solid-Aluminium, Cer=Ceramic
PS=Polystyrol, PP=Polypropylen, El=Electrolytic
MPC=Metalized Polycarbonate

MANUFACTURER: ADI=Analog Devices Inc., Ex=Exar, Fc=Fairchild,
Mot=Motorola, MpS=Micropower Semiconductors,
NS=National Semiconductors, Ph=Philips, Ra=Raytheon,
RCA=Radio corp. of America, Sie=Siemens, Sig=Signetics,
Six=Siliconix, Tf=Telefunken, Tho-CSF=Thomson Semiconductor,
TI=Texas Instruments.

DRIG 85/11/12

PUBLISHED: 12/86

REPRODUCE AMPLIFIER PCB 1.820.710-84 GR20 EL10/15 "ESE"

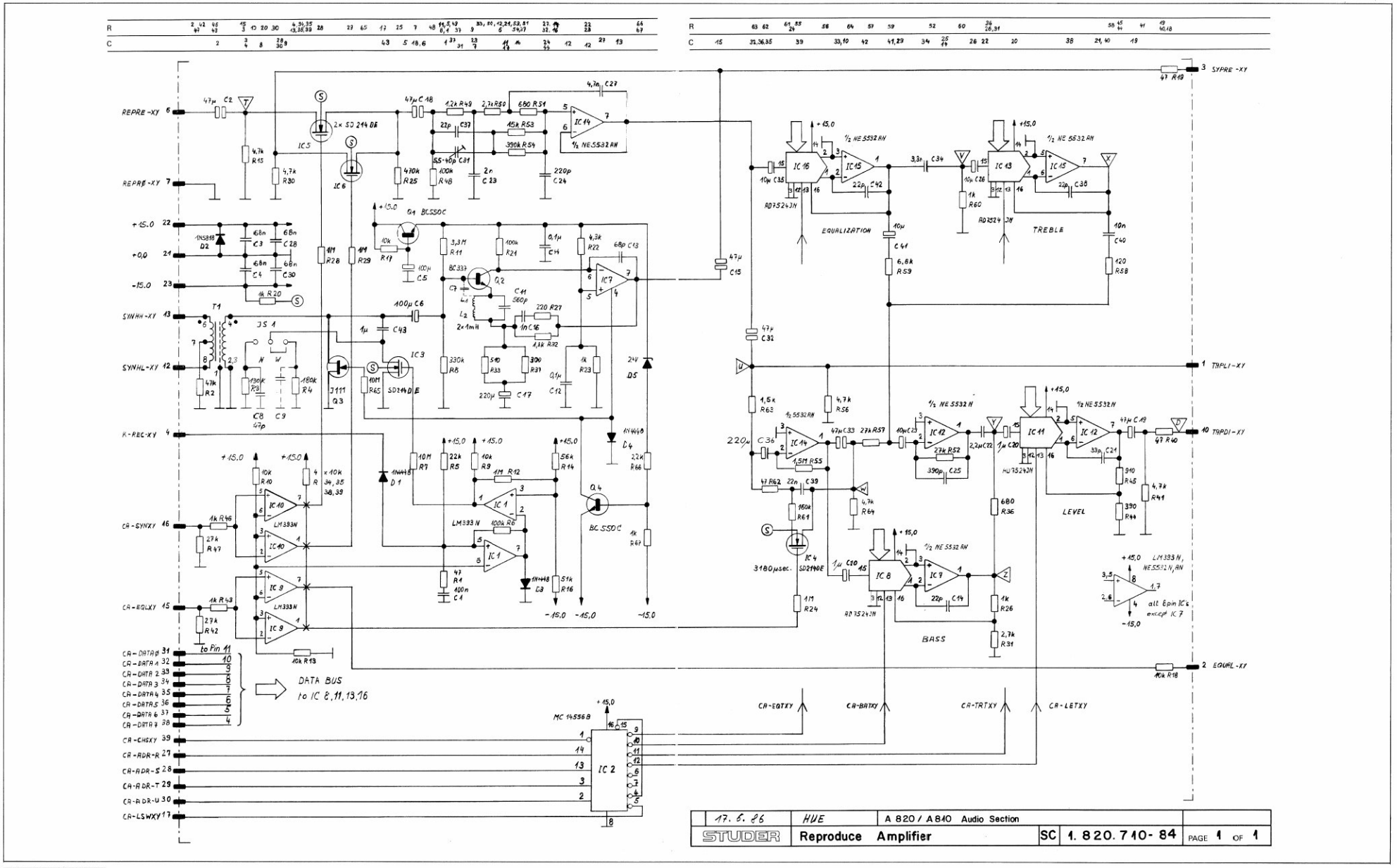

17. 6. 86	HUE	A 820 / A 810 Audio Section		
STUDER	Reproduce Amplifier	SC	1. 820. 710- 84	PAGE 1 OF 1

REPRODUCE AMPLIFIER PCB 1.820.710-84 GR20 EL10/15 "ESE"

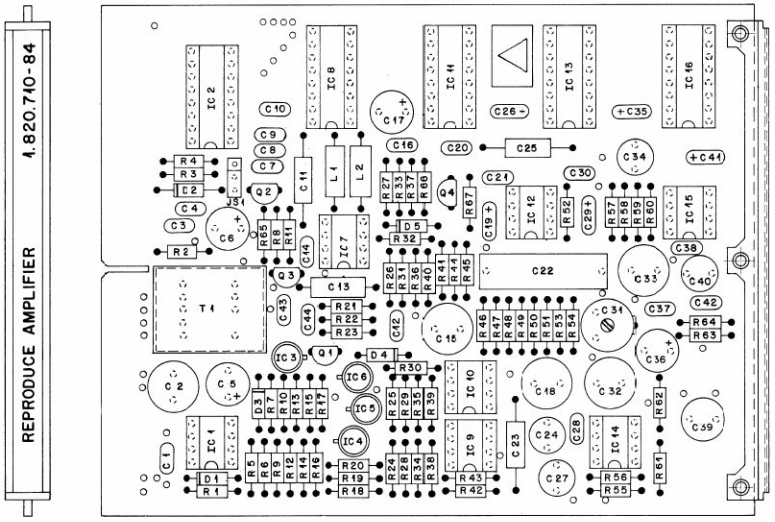

IND.	POS.NO.	PART NO.	VALUE	SPECIFICATIONS / EQUIVALENT	MANUF.
	C..0001	59.06.5104	0.1 uF	5% 63V , PETP	
	C..0002	59.99.0401	47 uF	-20% 16V , El bipolar	
	C..0003	59.06.0683	68 nF	10% 63V , PETP	
	C..0004	59.06.0683	68 nF	10% 63V , PETP	
	C..0005	59.22.5101	100 uF	-20% 25V , El	
	C..0006	59.22.5101	100 uF	-20% 25V , El	
	C..0007		not used		
	C..0008	59.34.2470	47 pF	2% N150 , Cer	
	C..0009		not used		
	C..0010	59.06.5105	1 uF	5% PETP	
	C..0011	59.12.7561	560 pF	1% 63V , PS	
	C..0012	59.06.5104	0.1 uF	5% 63V , PETP	
	C..0013	59.04.9680	68 pF	5% 63V , PP	
	C..0014	59.34.2220	22 pF	5% N150 , Cer	
	C..0015	59.99.0401	47 uF	-20% 16V , El bipolar	
	C..0016	59.06.0102	1 nF	10% 63V , PETP	
	C..0017	59.22.2221	220 uF	-10% 6V , El	
	C..0018	59.99.0401	47 uF	-20% 16V , El bipolar	
	C..0019	59.26.0470	47 uF	-20% 6.3V , Sal	Ph
	C..0020	59.06.5105	1 uF	5% 50V PETP	
	C..0021	59.34.2330	33 pF	5% N150 , Cer	
	C..0022	59.02.2225	2.2 uF	5% 63V , MPC	
	C..0023	59.12.7202	2 nF	1% 63V , PS	
	C..0024	59.05.1221	220 pF	1% 63V , PP	
	C..0025	59.12.7391	390 pF	1% 63V , PS	
	C..0026	59.26.2100	10 uF	-20% 16V , Sal	Ph
	C..0027	59.05.1472	4.7 nF	1% 63V , PP	
	C..0028	59.06.0683	68 nF	10% 63V , PETP	
	C..0029	59.26.2100	10 uF	-20% 16V , Sal	Ph
	C..0030	59.06.0683	68 nF	10% 63V , PETP	
	C..0031	59.18.0108	40 pF	Trimmer capacitor, Philips Nr 2222.808.32409	
	C..0032	59.99.0401	47 uF	-20% 16V , El bipolar	
	C..0033	59.99.0401	47 uF	-20% 16V , El bipolar	
	C..0034	59.05.1332	3.3 nF	1% 63V , PP	
	C..0035	59.26.2100	10 uF	-20% 16V , Sal	Ph
	C..0036	59.22.3221	220 uF	-20% 10V , El	
	C..0037	59.34.2220	22 pF	5% N150 , Cer	

S T U D E R (00) 86/06/17 HUE REPRODUCE AMPLIFIER 1.820.710.84 PAGE 1

IND.	POS.NO.	PART NO.	VALUE	SPECIFICATIONS / EQUIVALENT	MANUF.
	C..0038	59.34.2220	22 pF	5% N150 , Cer	
	C..0039	59.05.1223	22 nF	1% 63V , PP	
	C..0040	59.05.1103	10 nF	1% 63V , PP	
	C..0041	59.26.2100	10 uF	-20% 16V , Sal	Ph
	C..0042	59.34.2220	22 pF	5% N150 , Cer	
	C..0043	59.06.5105	1 uF	5% 50V , PETP	
	C..0044	59.06.0104	0.1 uF	10% 50V , PETP	
	D..0001	50.04.0125	1N 4448		
	D..0002	50.04.0512	1N 5818	1N5819	Mot
	D..0003	50.04.0125	1N 4448		
	D..0004	50.04.0125	1N 4448		
	D..0005	50.04.1121	24 V	5% 0.4W	
	IC.0001	50.05.0283	LM393N		NS,TI
	IC.0002	50.07.0006	CD4556B	MC 14 556B, 4556B	RCA,Mot,Fc
	IC.0003	50.11.0106	SO 214 DE	BSC 214	Ph,Six
	IC.0004	50.11.0106	SO 214 DE	BSC 214	Ph,Six
	IC.0005	50.11.0106	SO 214 DE	BSC 214	Ph,Six
	IC.0006	50.11.0106	SO 214 DE	BSC 214	Ph,Six
	IC.0007	50.09.0106	NE5532AN	XR5532AN, 5532ANB	Sig,Exa,Ra
	IC.0008	50.07.0002	AD7524JN	MP 7524 JN	ADI,MpS
	IC.0009	50.05.0283	LM393N		NS,TI
	IC.0010	50.05.0283	LM393N		NS,TI
	IC.0011	50.07.0002	AD7524JN	MP 7524 JN	ADI,MpS
	IC.0012	50.09.0105	NE5532N	XR 5532 N, 5532 NB	Sig,Exa,Ra
	IC.0013	50.07.0002	AD7524JN	MP 7524 JN	ADI,MpS
	IC.0014	50.09.0106	NE5532AN	XR 5532AN, 5532ANB	Sig,Exa,Ra
	IC.0015	50.09.0106	NE5532AN	XR 5532AN, 5532ANB	Sig,Exa,Ra
	IC.0016	50.07.0002	AD7524JN	MP 7524 JN	ADI,MpS
	JS.0001			See note 1	
	L..0001	62.01.0128	1 mH	Govanda Nr. 17-104, Delevan Nr. 1641-105	
	L..0002	62.01.0128	1 mH	Govanda Nr. 17-104, Delevan Nr. 1641-105	
	Q..0001	50.03.0407	BC550C		Sie,Ph

S T U D E R (00) 86/06/17 HUE REPRODUCE AMPLIFIER 1.820.710.84 PAGE 2

IND.	POS.NO.	PART NO.	VALUE	SPECIFICATIONS / EQUIVALENT	MANUF.
	Q..0002	50.03.0516	BC337		Sie
	Q..0003	50.03.0216	J 111		Six
	Q..0004	50.03.0407	BC550C		Sie,Ph
	R..0001	57.11.4470	47 Ohm	5%	
	R..0002	57.11.4473	47 kOhm	5%	
	R..0003	57.11.3134	130 kOhm	2%	
	R..0004	57.11.4184	180 kOhm	2%	
	R..0005	57.11.4223	22 kOhm	2%	
	R..0006	57.11.4104	100 kOhm	5%	
	R..0007	57.11.4106	10 MOhm	5%	
	R..0008	57.11.4334	330 kOhm	2%	
	R..0009	57.11.4103	10 kOhm	5%	
	R..0010	57.11.4103	10 kOhm	5%	
	R..0011	57.11.4335	3.3 MOhm	2%	
	R..0012	57.11.4105	1 MOhm	5%	
	R..0013	57.11.4103	10 kOhm	5%	
	R..0014	57.11.4563	56 kOhm	2%	
	R..0015	57.11.4472	4.7 kOhm	5%	
	R..0016	57.11.3513	51 kOhm	1%	
	R..0017	57.11.4103	10 kOhm	5%	
	R..0018	57.11.4103	10 kOhm	5%	
	R..0019	57.11.4470	47 Ohm	5%	
	R..0020	57.11.4102	1 kOhm	5%	
	R..0021	57.11.4104	100 kOhm	2%	
	R..0022	57.11.3432	4.3 kOhm	1%	
	R..0023	57.11.4102	1 kOhm	2%	
	R..0024	57.11.4105	1 MOhm	5%	
	R..0025	57.11.4474	470 kOhm	5%	
	R..0026	57.11.4102	1 kOhm	2%	
	R..0027	57.11.4221	220 Ohm	5%	
	R..0028	57.11.4105	1 MOhm	5%	
	R..0029	57.11.4105	1 MOhm	5%	
	R..0030	57.11.4472	4.7 kOhm	5%	
	R..0031	57.11.4272	2.7 kOhm	2%	
	R..0032	57.11.4182	1.8 kOhm	2%	
	R..0033	57.11.3511	510 Ohm	1%	

S T U D E R (00) 86/06/17 HUE REPRODUCE AMPLIFIER 1.820.710.84 PAGE 3

IND.	POS.NO.	PART NO.	VALUE	SPECIFICATIONS / EQUIVALENT	MANUF.
	R..0034	57.11.4103	10 kOhm	5%	
	R..0035	57.11.4103	10 kOhm	5%	
	R..0036	57.11.4681	680 Ohm	2%	
	R..0037	57.11.3301	300 Ohm	2%	
	R..0038	57.11.4103	10 kOhm	5%	
	R..0039	57.11.4103	10 kOhm	5%	
	R..0040	57.11.4470	47 Ohm	5%	
	R..0041	57.11.4472	4.7 kOhm	5%	
	R..0042	57.11.4273	27 kOhm	5%	
	R..0043	57.11.4102	1 kOhm	5%	
	R..0044	57.11.4391	390 Ohm	2%	
	R..0045	57.11.3911	910 Ohm	1%	
	R..0046	57.11.4102	1 kOhm	5%	
	R..0047	57.11.4273	27 kOhm	5%	
	R..0048	57.11.4104	100 kOhm	5%	
	R..0049	57.11.3122	1.2 kOhm	1%	
	R..0050	57.11.3272	2.7 kOhm	1%	
	R..0051	57.11.3681	680 Ohm	1%	
	R..0052	57.11.4273	27 kOhm	2%	
	R..0053	57.11.3153	15 kOhm	1%	
	R..0054	57.11.4394	390 kOhm	5%	
	R..0055	57.11.5155	1.5 MOhm	5%	
	R..0056	57.11.4472	4.7 kOhm	5%	
	R..0057	57.11.4273	27 kOhm	2%	
	R..0058	57.11.4121	120 Ohm	2%	
	R..0059	57.11.4682	6.8 kOhm	2%	
	R..0060	57.11.4102	1 kOhm	5%	
	R..0061	57.11.3164	160 kOhm	1%	
	R..0062	57.11.4470	47 Ohm	5%	
	R..0063	57.11.3152	1.5 kOhm	1%	
	R..0064	57.11.4472	4.7 kOhm	5%	
	R..0065	57.11.5106	10 MOhm	5%	
	R..0066	57.11.4222	2.2 kOhm	5%	
	R..0067	57.11.4102	1.0 kOhm	5%	

S T U D E R (00) 86/06/17 HUE REPRODUCE AMPLIFIER 1.820.710.84 PAGE 4

IND.	POS.NO.	PART NO.	VALUE	SPECIFICATIONS / EQUIVALENT	MANUF.

Note 1 - Contact pin: Studer 54.01.6020, Berg 75 160-102-36
Bridge: Studer 54.01.6021, Philips 2422 024 88003

PETP=Polyesterfilm, Sal=Solid-Aluminium, Cer=Ceramic
PS=Polystyrol, PP=Polypropylen, El=Electrolytic
MPC=Metalized Polycarbonate

MANUFACTURER: ADI=Analog Devices Inc., Ex=Exar, Fc=Fairchild,
Mot=Motorola, MpS=Micropower Semiconductors,
NS=National Semiconductors, Ph=Philips, Ra=Raytheon,
RCA=Radio corp. of America, Sie=Siemens, Sig=Signetics,
Six=Siliconix, Tf=Telefunken, Tho-CSF=Thomson Semiconductor,
TI=Texas Instruments.

ORIG 86/06/17

S T U D E R (00) 86/06/17 HUE REPRODUCE AMPLIFIER 1.820.710.84 PAGE 5

PUBLISHED: 12/86

REPRODUCE AMPLIFIER 1.820.710.85 GR20 EL10/15

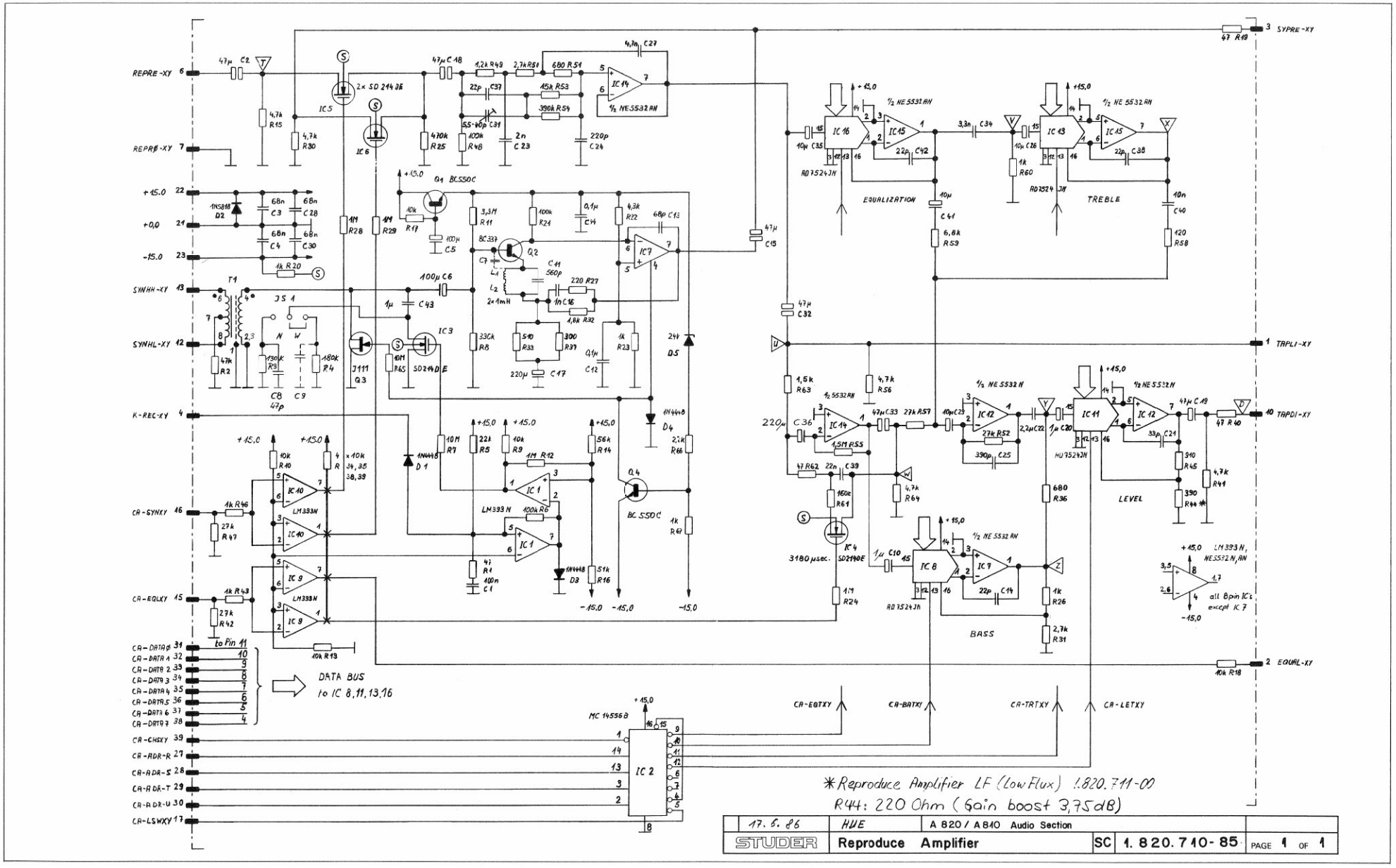

*Reproduce Amplifier LF (Low Flux) 1.820.711-00
R44: 220 Ohm (Gain boost 3,75dB)

17. 6. 86	HUE	A 820 / A 840 Audio Section		
STUDER	Reproduce Amplifier	SC	1. 8 2 0. 7 1 0- 8 5	PAGE 1 OF 1

REPRODUCE AMPLIFIER 1.820.710.85

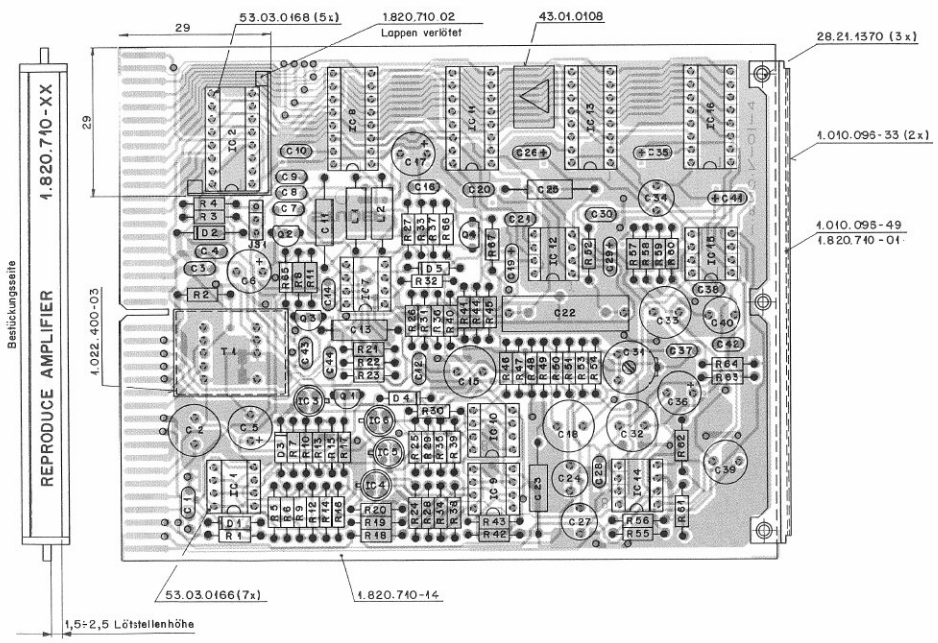

IND.	POS.NO.	PART NO.	VALUE	SPECIFICATIONS / EQUIVALENT	MANUF.
	C.....1	59.06.5104	0.1 uF	5%, 63V , PETF	
	C.....2	59.99.0401	47 uF	-20%, 16V , El bipolar	
	C.....3	59.06.0683	68 nF	10%, 63V , PETF	
	C.....4	59.06.0683	68 nF	10%, 63V , PETF	
	C.....5	59.22.5101	100 uF	-20%, 25V , El	
	C.....6	59.22.5101	100 uF	-20%, 25V , El	
	C.....7		not used		
	C.....8	59.34.2470	47 pF	2%, 8150 , Cer	
	C.....9		not used		
	C.....10	59.06.5105	1 uF	5%, PETF	
	C.....11	59.12.7561	560 pF	1%, 63V , PS	
	C.....12	59.06.5104	0.1 uF	5%, 63V , PETF	
	C.....13	59.04.9680	68 pF	5%, 63V , PF	
	C.....14	59.34.2220	22 pF	5%, 8150 , Cer	
	C.....15	59.99.0401	47 uF	-20%, 16V , El bipolar	
	C.....16	59.06.0102	1 nF	10%, 63V , PETF	
	C.....17	59.22.2221	220 uF	-10%, 6V , El	
	C.....18	59.99.0401	47 uF	-20%, 16V , El bipolar	
	C.....19	59.26.0470	47 uF	-20%, 6.3V , Sal	Ph
	C.....20	59.06.5105	1 uF	5%, 50V , PETF	
	C.....21	59.34.2330	33 pF	5%, 8150 , Cer	
	C.....22	59.02.2225	2.2 uF	5%, 63V , MPC	
	C.....23	59.12.7202	2 nF	1%, 63V , PS	
	C.....24	59.05.1221	220 pF	1%, 63V , PF	
	C.....25	59.12.7391	390 pF	1%, 63V , PS	
	C.....26	59.26.2100	10 uF	-20%, 16V , Sal	Ph
	C.....27	59.05.1472	4.7 nF	1%, 63V , PF	
	C.....28	59.06.0683	68 nF	10%, 63V , PETF	
	C.....29	59.26.2100	10 uF	-20%, 16V , Sal	Ph
	C.....30	59.06.0683	68 nF	10%, 63V , PETF	
	C.....31	59.18.0108	40 pF	Trimmer capacitor, Philips Nr 2222.808.32409	
	C.....32	59.99.0401	47 uF	-20%, 16V , El bipolar	
	C.....33	59.99.0401	47 uF	-20%, 16V , El bipolar	
	C.....34	59.05.1332	3.3 nF	1%, 63V , PF	
	C.....35	59.26.2100	10 uF	-20%, 16V , Sal	Ph
	C.....36	59.22.3221	220 uF	-20%, 10V , El	
	C.....37	59.34.2220	22 pF	5%, 8150 , Cer	

IND.	POS.NO.	PART NO.	VALUE	SPECIFICATIONS / EQUIVALENT	MANUF.
	C....38	59.34.2220	22 pF	5%, 8150 , Cer	
	C....39	59.05.1223	22 nF	1%, 63V , PF	
	C....40	59.05.1103	10 nF	1%, 63V , PF	
	C....41	59.26.2100	10 uF	-20%, 16V , Sal	Ph
	C....42	59.34.2220	22 pF	5%, 8150 , Cer	
	C....43	59.06.5105	1 uF	5%, 50V , PETF	
	C....44	59.06.0104	0.1 uF	10%, 50V , PETF	
	D.....1	50.04.0125	1N 4448		
	D.....2	50.04.0512	1N 5818	145819	Mot
	D.....3	50.04.0125	1N 4448		
	D.....4	50.04.0125	1N 4448		
	D.....5	50.04.1121	24 V	5% 0.4W	
	IC....1	50.05.0283	LM393N		NS,TI
	IC....2	50.07.0004	CD4556B	MC 14 556B, 4556B	RCA,Mot,Fc
	IC....3	50.11.0106	SD 214 DE	HSD 214	Ph,Six
	IC....4	50.11.0106	SD 214 DE	HSD 214	Ph,Six
	IC....5	50.11.0106	SD 214 DE	HSD 214	Ph,Six
	IC....6	50.11.0106	SD 214 DE	HSD 214	Ph,Six
	IC....7	50.09.0106	NE5532AN	XR5532AN, 5532ANB	Sig,Ex,Ra
	IC....8	50.07.0002	AD7524JN	MF 7524 JN	ADI,MpS
	IC....9	50.05.0283	LM393N		NS,TI
	IC....10	50.05.0283	LM393N		NS,TI
	IC....11	50.07.0002	AD7524JN	MF 7524 JN	ADI,MpS
	IC....12	50.09.0105	NE5532N	XR 5532 N, 5532 NB	Sig,Ex,Ra
	IC....13	50.07.0002	AD7524JN	MF 7524 JN	ADI,MpS
	IC....14	50.09.0106	NE5532AN	XR 5532AN, 5532ANB	Sig,Ex,Ra
	IC....15	50.09.0106	NE5532AN	XR 5532AN, 5532ANB	Sig,Ex,Ra
	IC....16	50.07.0002	AD7524JN	MF 7524 JN	ADI,MpS
	JS....1			See note 1	
	L.....1	62.01.0128	1 mH	Gowanda Nr. 17-104, Delevan Nr. 1641-105	
	L.....2	62.01.0128	1 mH	Gowanda Nr. 17-104, Delevan Nr. 1641-105	
	Q.....1	50.03.0407	BC550C		Sie,Ph

IND.	POS.NO.	PART NO.	VALUE	SPECIFICATIONS / EQUIVALENT	MANUF.
	Q.....2	50.03.0516	BC337		Sie
	Q.....3	50.03.0216	J 111		Sie
	Q.....4	50.03.0407	BC550C		Sie,Ph
	R.....1	57.11.3470	47 Ohm	5%	
	R.....2	57.11.3473	47 kOhm	5%	
	R.....3	57.11.3134	130 kOhm	2%	
	R.....4	57.11.3184	180 kOhm	2%	
	R.....5	57.11.3223	22 kOhm	2%	
	R.....6	57.11.3104	100 kOhm	5%	
	R.....7	57.11.3106	10 MOhm	5%	
	R.....8	57.11.3334	330 kOhm	2%	
	R.....9	57.11.3103	10 kOhm	5%	
	R....10	57.11.3103	10 kOhm	5%	
	R....11	57.11.3335	3.3 MOhm	2%	
	R....12	57.11.3105	1 MOhm	5%	
	R....13	57.11.3103	10 kOhm	5%	
	R....14	57.11.3563	56 kOhm	2%	
	R....15	57.11.3472	4.7 kOhm	5%	
	R....16	57.11.3513	51 kOhm	1%	
	R....17	57.11.3103	10 kOhm	5%	
	R....18	57.11.3103	10 kOhm	5%	
	R....19	57.11.3470	47 Ohm	5%	
	R....20	57.11.3102	1 kOhm	5%	
	R....21	57.11.3104	100 kOhm	2%	
	R....22	57.11.3432	4.3 kOhm	1%	
	R....23	57.11.3102	1 kOhm	2%	
	R....24	57.11.3105	1 MOhm	5%	
	R....25	57.11.3474	470 kOhm	5%	
	R....26	57.11.3102	1 kOhm	2%	
	R....27	57.11.3221	220 Ohm	5%	
	R....28	57.11.3105	1 MOhm	5%	
	R....29	57.11.3105	1 MOhm	5%	
	R....30	57.11.3472	4.7 kOhm	5%	
	R....31	57.11.3272	2.7 kOhm	2%	
	R....32	57.11.3182	1.8 kOhm	2%	
	R....33	57.11.3511	510 Ohm	2%	

IND.	POS.NO.	PART NO.	VALUE	SPECIFICATIONS / EQUIVALENT	MANUF.
	R....34	57.11.3103	10 kOhm	5%	
	R....35	57.11.3103	10 kOhm	5%	
	R....36	57.11.3681	680 Ohm	2%	
	R....37	57.11.3301	300 Ohm	2%	
	R....38	57.11.3103	10 kOhm	5%	
	R....39	57.11.3103	10 kOhm	5%	
	R....40	57.11.3470	47 Ohm	5%	
	R....41	57.11.3472	4.7 kOhm	5%	
	R....42	57.11.3273	27 kOhm	5%	
	R....43	57.11.3102	1 kOhm	5%	
	R....44	57.11.3391	390 Ohm	2%	
	R....45	57.11.3911	910 Ohm	1%	
	R....46	57.11.3102	1 kOhm	5%	
	R....47	57.11.3273	27 kOhm	5%	
	R....48	57.11.3104	100 kOhm	5%	
	R....49	57.11.3122	1.2 kOhm	1%	
	R....50	57.11.3272	2.7 kOhm	1%	
	R....51	57.11.3681	680 Ohm	1%	
	R....52	57.11.3273	27 kOhm	2%	
	R....53	57.11.3153	15 kOhm	1%	
	R....54	57.11.3394	390 kOhm	5%	
	R....55	57.11.5155	1.5 MOhm	5%	
	R....56	57.11.3472	4.7 kOhm	5%	
	R....57	57.11.3273	27 kOhm	2%	
	R....58	57.11.3121	120 Ohm	2%	
	R....59	57.11.3682	6.8 kOhm	2%	
	R....60	57.11.3102	1 kOhm	5%	
	R....61	57.11.3164	160 kOhm	1%	
	R....62	57.11.3470	47 Ohm	5%	
	R....63	57.11.3152	1.5 kOhm	1%	
	R....64	57.11.3472	4.7 kOhm	5%	
	R....65	57.11.5106	10 MOhm	5%	
	R....66	57.11.3222	2.2 kOhm	5%	
	R....67	57.11.3102	1.0 kOhm	5%	

IND.	POS.NO.	PART NO.	VALUE	SPECIFICATIONS / EQUIVALENT	MANUF.

Note 1 - Contact pin: Studer 54.01.0020, Berg 75 160-102-36
Bridge: Studer 54.01.0021, Philips 2422 024 88003

PETF=Polyesterfilm, Sal=Solid-Aluminium, Cer=Ceramic
PS=Polystyrol, PP=Polypropylen, El=Electrolytic
MPC=Metalized Polycarbonate

MANUFACTURER: ADI=Analog Devices Inc., Ex=Exar, Fc=Fairchild,
Mot=Motorola, Mps=Micropower Semiconductors,
NS=National Semiconductors, Ph=Philips, Ra=Raytheon,
RCA=Radio corp. of America, Sie=Siemens, Sig=Signetics,
Six=Siliconix, Tf=Telefunken, Ths=CSF=Thomson Semiconductor,
TI=Texas Instruments.

ORIG 88/10/26

REPRODUCE PREAMPLIFIER PCB 1 CHANNEL 1.810.710–00 GR32 EL2

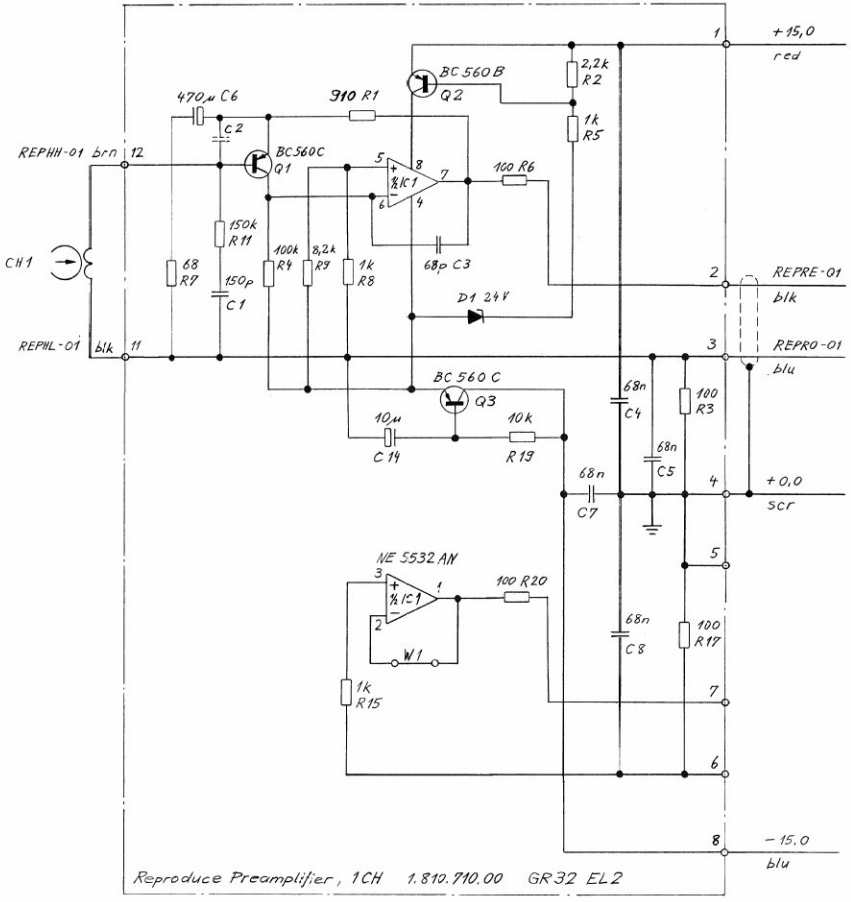

Reproduce Preamplifier, 1CH 1.810.710.00 GR32 EL2

REPRODUCE PREAMPLIFIER PCB 2 CHANNEL 1.810.711–00 GR32 EL2

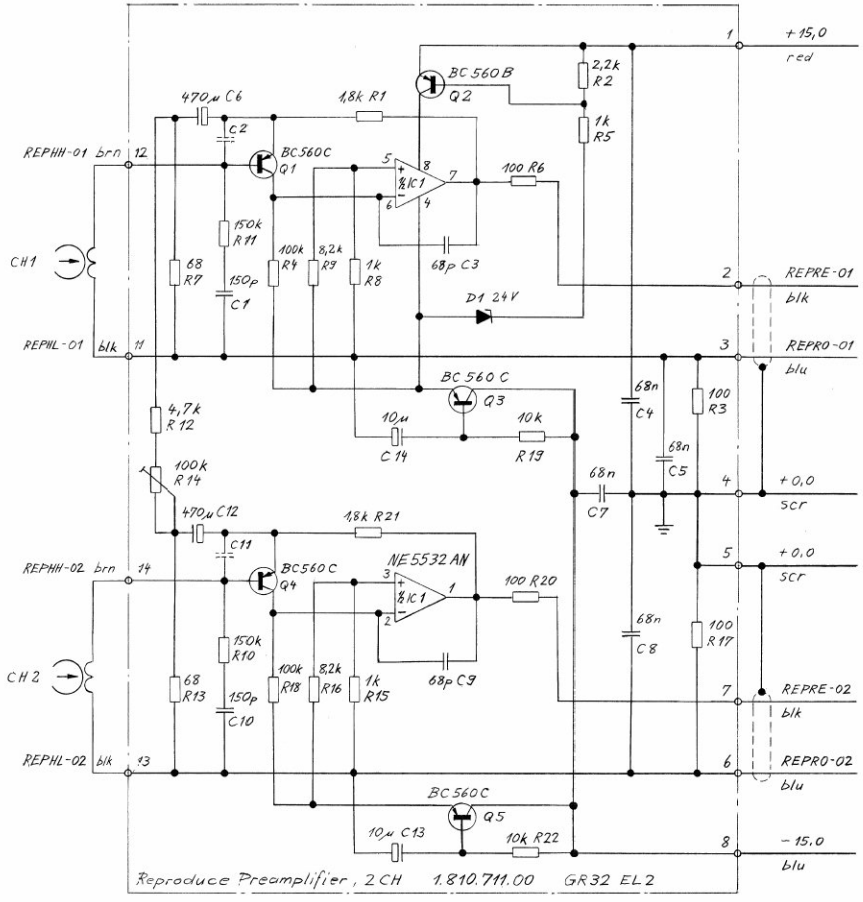

Reproduce Preamplifier, 2CH 1.810.711.00 GR32 EL2

REPRODUCE PREAMPLIFIER PCB 1 CHANNEL 1.810.710–00 GR32 EL2
REPRODUCE PREAMPLIFIER PCB 2 CHANNEL 1.810.711–00 GR32 EL2

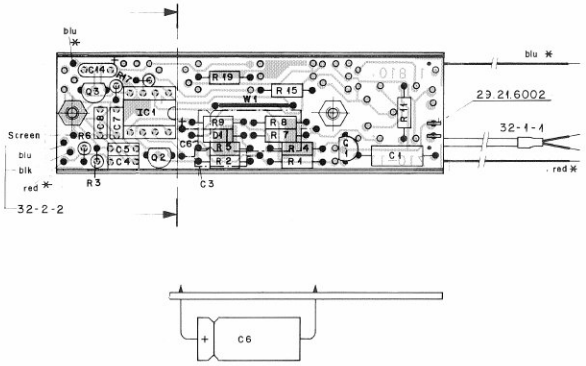

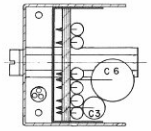

IND.	POS.NO.	PART NO.	VALUE	SPECIFICATIONS / EQUIVALENT	MANUF.
	C.....1	59.04.7151	150 pF	PP	ERO,NSF,Sie
	C.....2		not used		
	C.....3	59.04.9680	68 pF	PP	ERO,NSF,Sie
	C.....4	59.99.0205	68 nF	Ce	
	C.....5	59.99.0205	68 nF	Ce	
	C.....6	59.25.1471	470 uF	6.3V, El	
	C.....7	59.99.0205	68 nF	Ce	
	C.....8	59.99.0205	68 nF	Ce	
	C.....14	59.26.2100	10 uF	16V, Sal	Ph
	D.....1	50.04.1121	24 V Z	BZX83C 24, BZX55C 24, ZPD 24	ITT,Ses
	IC.....1	50.09.0106	NE5532AN	XR5532AN, 5532ANB	Ex,Ra,Sig
	Q.....1	50.03.0496	BC560C		Mot,Ph,Sie,Tf
	Q.....2	50.03.0515	BC307B	BC251B, BC557B, BC560B	ITT,Mot,Ph,Tf,TI
	Q.....3	50.03.0496	BC560C		Mot,Ph,Sie,Tf
	R.....1	57.11.3911	910 Ohm		
	R.....2	57.11.4222	2.2 kOhm		
	R.....3	57.11.4101	100 Ohm		
	R.....4	57.11.4104	100 kOhm		
	R.....5	57.11.4102	1 kOhm		
	R.....6	57.11.4101	100 Ohm		
	R.....7	57.11.4680	68 Ohm		
	R.....8	57.11.4102	1 kOhm		
	R.....9	57.11.4822	8.2 kOhm		
	R.....11	57.11.4154	150 kOhm		
	R.....15	57.11.4102	1 kOhm		
	R.....17	57.11.4101	100 Ohm		
	R.....19	57.11.4103	10 kOhm		
	R.....20	57.11.4101	100 Ohm		
	W.....01			Wire bridge	

S T U D E R 82/11/19 GAE REPRODUCE PREAMPLIFIER, 1 CH 1.810.710.00 PAGE 1

IND.	POS.NO.	PART NO.	VALUE	SPECIFICATIONS / EQUIVALENT	MANUF.

Following components are not used:

C 0009, 0010, 0011, 0012, 0013.

Q 0004, 0005.

R 0010, 0012, 0013, 0014, 0016, 0018, 0021, 0022.

Ce=Ceramic, El=Electrolytic, PP=Polypropylen, Sal=Solid aluminium

MANUFACTURER: ERO=E. Roederstein, Ex=Exar, ITT=Intermetall,
NSF=AEG-Telefunken=NSF, Mot=Motorola, Ph=Philips,
Ra=Raytheon, Ses=Sescosem, Sie=Siemens, Sig=Signetics,
Tf=Telefunken, TI=Texas Instruments

ORIG 82/11/19

S T U D E R 82/11/19 GAE REPRODUCE PREAMPLIFIER, 1 CH 1.810.710.00 PAGE 2

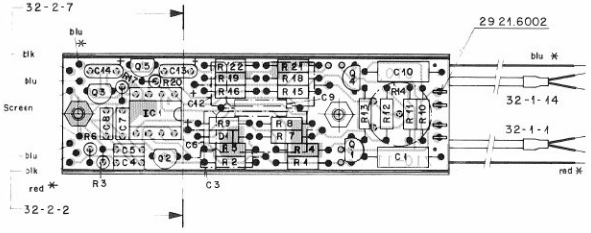

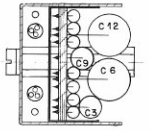

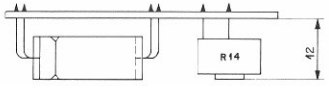

IND.	POS.NO.	PART NO.	VALUE	SPECIFICATIONS / EQUIVALENT	MANUF.
	C..0001	59.04.7151	150 pF	PP	
	C..0002		not used		
	C..0003	59.04.9680	68 pF	PP	
	C..0004	59.99.0205	68 nF	Ce	
	C..0005	59.99.0205	68 nF	Ce	
	C..0006	59.25.471	470 uF	6.3V, El	
	C..0007	59.99.0205	68 nF	Ce	
	C..0008	59.99.0205	68 nF	Ce	
	C..0009	59.04.9680	68 pF	PP	
	C..0010	59.04.7151	150 pF	PP	
	C..0011		not used		
	C..0012	59.25.471	470 uF	6V, El	
	C..0013	59.26.2100	10 uF	16V, Sal	Ph
	C..0014	59.26.2100	10 uF	16V, Sal	Ph
	D..0001	50.04.121	24 V Z	BZX83C 24, BZX55C 24, ZPD 24	ITT,Ses
	IC.0001	50.09.0106	NE5532AN	XR5532AN, 5532ANB	Ex,Ra,Sig
	Q..0001	50.03.0496	BC560C		Mot,Ph,Sie,Tf
	Q..0002	50.03.0515	BC307B	BC251B, BC557B, BC560B	ITT,Mot,Ph,Tf,TI
	Q..0003	50.03.0496	BC560C		Mot,Ph,Sie,Tf
	Q..0004	50.03.0496	BC560C		Mot,Ph,Sie,Tf
	Q..0005	50.03.0496	BC560C		Mot,Ph,Sie,Tf
	R..0001	57.11.4182	1.8 kOhm		
	R..0002	57.11.4222	2.2 kOhm		
	R..0003	57.11.4101	100 Ohm		
	R..0004	57.11.4104	100 kOhm		
	R..0005	57.11.4102	1 kOhm		
	R..0006	57.11.4101	100 Ohm		
	R..0007	57.11.4680	68 Ohm		
	R..0008	57.11.4102	1 kOhm		
	R..0009	57.11.4822	8.2 kOhm		
	R..0010	57.11.4154	150 kOhm		
	R..0011	57.11.4154	150 kOhm		
	R..0012	57.11.4472	4.7 kOhm		

S T U D E R 82/08/02 GAE REPRODUCE PREAMPLIFIER, 2 CH 1.810.711.00 PAGE 1

IND.	POS.NO.	PART NO.	VALUE	SPECIFICATIONS / EQUIVALENT	MANUF.
	R..0013	57.11.4680	68 Ohm		
	R..0014	58.01.4104	100 kOhm	See note 1	
	R..0015	57.11.4102	1 kOhm		
	R..0016	57.11.4822	8.2 kOhm		
	R..0017	57.11.4101	100 Ohm		
	R..0018	57.11.4104	100 kOhm		
	R..0019	57.11.4103	10 kOhm		
	R..0020	57.11.4101	100 Ohm		
	R..0021	57.11.4182	1.8 kOhm		
	R..0022	57.11.4103	10 kOhm		

Note 1 - 100 kOhm Potentiometer +log. 10%
Allen Bradley Nr. YR 104 A

Ce=Ceramic, El=Electrolytic, PP=Polypropylen, Sal=Solid aluminium

MANUFACTURER: Ex=Exar, ITT=Intermetal, Mot=Motorola, Ph=Philips,
Ra=Raytheon, Ses=Sescosem, Sie=Siemens, Sig=Signetics,
Tf=Telefunken, TI=Texas Instruments

ORIG 82/08/02

S T U D E R 82/08/02 GAE REPRODUCE PREAMPLIFIER, 2 CH 1.810.711.00 PAGE 2

REPRODUCE PREAMPLIFIER PCB 1 CHANNEL 1.810.710–81 GR32 EL2

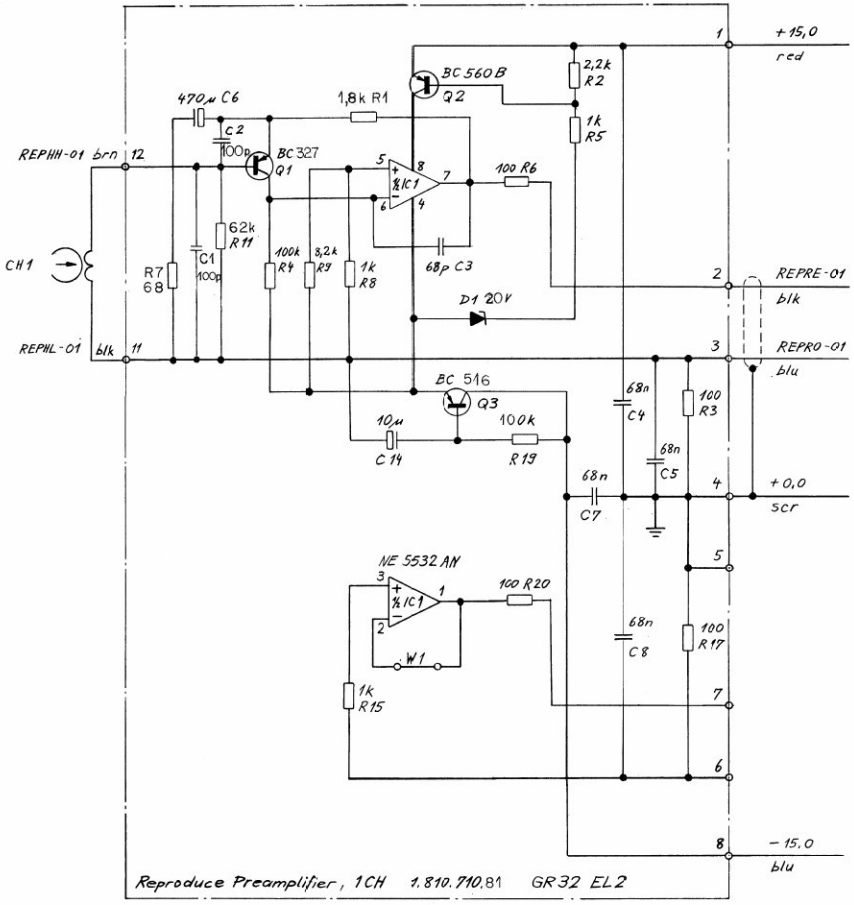

REPRODUCE PREAMPLIFIER PCB 2 CHANNEL 1.810.711–81 GR32 EL2

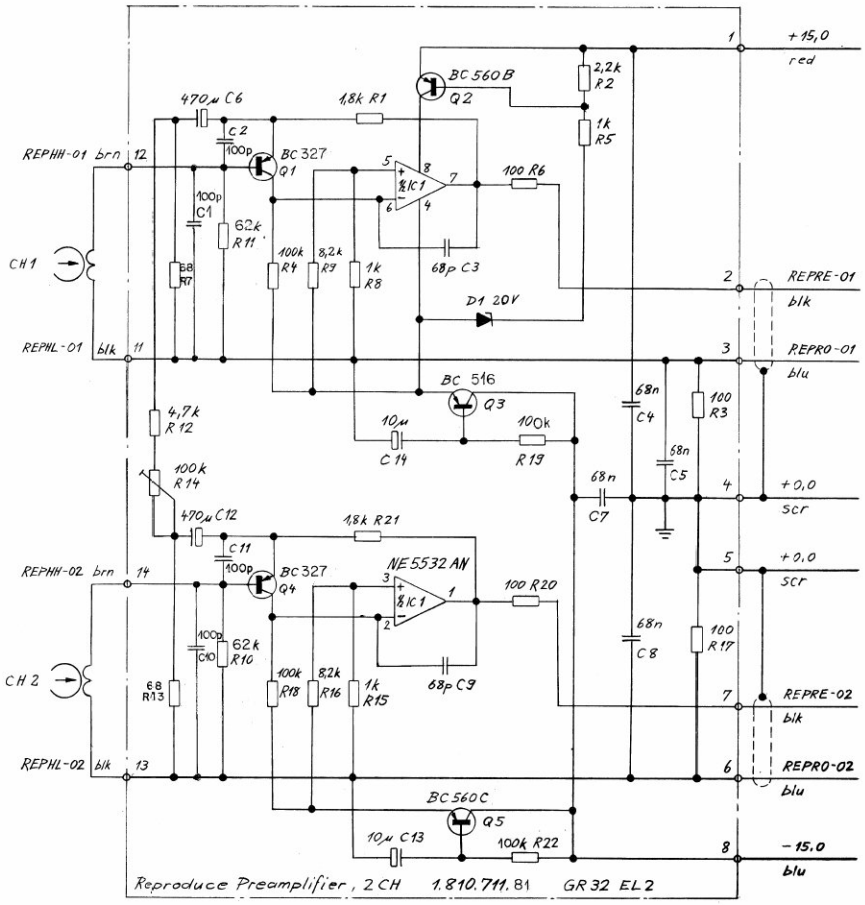

REPRODUCE PREAMPLIFIER PCB 1 CHANNEL 1.810.710–81 GR32 EL2

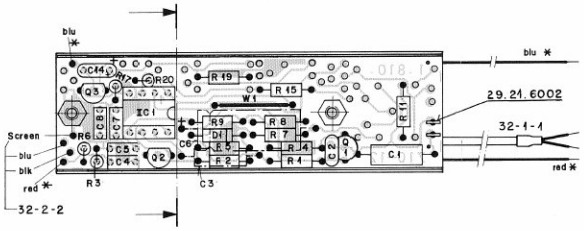

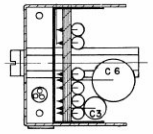

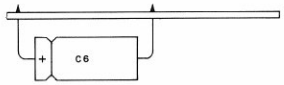

IND.	POS.NO.	PART NO.	VALUE	SPECIFICATIONS / EQUIVALENT		MANUF.
	C....1	59.08.7101	100 pF	2.5%	PP	ERO,NSF,Sie
	C....2	59.99.0622	100 pF		Ce	
	C....3	59.04.9680	68 pF		PP	ERO,NSF,Sie
	C....4	59.99.0205	68 nF		Ce	
	C....5	59.99.0205	68 nF		Ce	
	C....6	59.25.1471	470 uF	6.3V,	El	
	C....7	59.99.0205	68 nF		Ce	
	C....8	59.99.0205	68 nF		Ce	
	C....14	59.26.2100	10 uF	16V,	Sal	Ph
	D....1	50.04.1109	20 V Z	BZX83C 20, BZX55C 20, ZPD 20		ITT,Ses
	IC....1	50.09.0106	NE5532AN	XR5532AN, 5532AN8		Ex,Ra,Sig
	Q....1	50.03.0625	BC327			Sie
	Q....2	50.03.0515	BC307B	BC251B, BC557B, BC560B		ITT,Mot,Ph,Tf,TI
	Q....3	50.03.0448	BC516			Sie,TI
	R....1	57.11.3911	910 Ohm			
	R....2	57.11.4222	2.2 kOhm			
	R....3	57.11.4101	100 Ohm			
	R....4	57.11.4104	100 kOhm			
	R....5	57.11.4102	1 kOhm			
	R....6	57.11.4101	100 Ohm			
	R....7	57.11.4680	68 Ohm			
	R....8	57.11.4102	1 kOhm			
	R....9	57.11.4822	8.2 kOhm			
	R....11	57.11.3623	62 kOhm	1%		
	R....15	57.11.4102	1 kOhm			
	R....17	57.11.4101	100 Ohm			
	R....19	57.11.4104	100 kOhm			
	R....20	57.11.4101	100 Ohm			
	W....01			Wire bridge		

S T U D E R (00) 83/03/02 BBT REPRODUCE PREAMPLIFIER, 1 CH 1.810.710.81 PAGE 1

IND.	POS.NO.	PART NO.	VALUE	SPECIFICATIONS / EQUIVALENT	MANUF.

Following components are not used:

C 0009, 0010, 0011, 0012, 0013.

Q 0004, 0005.

R 0010, 0012, 0013, 0014, 0016, 0018, 0021, 0022.

Ce=Ceramic, El=Electrolytic, PP=Polypropylen, Sal=Solid aluminium

MANUFACTURER: ERO=E. Ipoedersteim, Ex=Exar, ITT=Intermetall,
NSF=AEG-Telefunken-NSF, Mot=Motorola, Ph=Philips,
Ra=Raytheon, Ses=Sescosem, Sie=Siemens, Sig=Signetics,
Tf=Telefunken, TI=Texas Instruments

ORIG 83/03/02

S T U D E R (00) 83/03/02 BBT REPRODUCE PREAMPLIFIER, 1 CH 1.810.710.81 PAGE 2

REPRODUCE PREAMPLIFIER PCB 2 CHANNEL 1.810.711–81 GR32 EL2

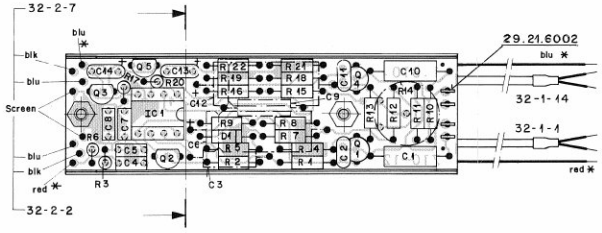

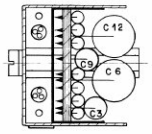

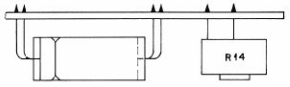

IND.	POS.NO.	PART NO.	VALUE	SPECIFICATIONS / EQUIVALENT		MANUF.
	C..0001	59.08.7101	100 pF	2.5%	PP	
	C..0002	59.99.0622	100 pF		Ce	
	C..0003	59.04.9680	68 pF		PP	
	C..0004	59.99.0205	68 nF		Ce	
	C..0005	59.99.0205	68 nF		Ce	
	C..0006	59.25.1471	470 uF	6.3V,	El	
	C..0007	59.99.0205	68 nF		Ce	
	C..0008	59.99.0205	68 nF		Ce	
	C..0009	59.04.9680	68 pF		PP	
	C..0010	59.08.7101	100 pF	2.5%	PP	
	C..0011	59.99.0622	100 pF		Ce	
	C..0012	59.25.1471	470 uF	6V,	El	
	C..0013	59.26.2100	10 uF	16V,	Sal	Ph
	C..0014	59.26.2100	10 uF	16V,	Sal	Ph
	D..0001	50.04.1109	20 V Z	BZX83C 20, BZX55C 20, ZPD 20		ITT,Ses
	IC..0001	50.09.0106	NE5532AN	XR5532AN, 5532ANB		Ex,Ra,Sig
	Q..0001	50.03.0625	BC327			Sie
	Q..0002	50.03.0515	BC307B	BC251B, BC557B, BC560B		ITT,Mot,Ph,Tf,TI
	Q..0003	50.03.0448	BC516			Sie,TI
	Q..0004	50.03.0625	BC327			Sie
	Q..0005	50.03.0496	BC560C			Mot,Ph,Sie,Tf
	R..0001	57.11.4182	1.8 kOhm			
	R..0002	57.11.4222	2.2 kOhm			
	R..0003	57.11.4101	100 Ohm			
	R..0004	57.11.4104	100 kOhm			
	R..0005	57.11.4102	1 kOhm			
	R..0006	57.11.4101	100 Ohm			
	R..0007	57.11.4680	68 Ohm			
	R..0008	57.11.4102	1 kOhm			
	R..0009	57.11.4822	8.2 kOhm			
	R..0010	57.11.3623	62 kOhm	1%		
	R..0011	57.11.3623	62 kOhm	1%		
	R..0012	57.11.4472	4.7 kOhm			

S T U D E R (00) 83/03/02 BBT REPRODUCE PREAMPLIFIER, 2 CH 1.810.711.81 PAGE 1

IND.	POS.NO.	PART NO.	VALUE	SPECIFICATIONS / EQUIVALENT	MANUF.
	R..0013	57.11.4680	68 Ohm		
	R..0014	58.01.4104	100 kOhm	See note 1	
	R..0015	57.11.4102	1 kOhm		
	R..0016	57.11.4822	8.2 kOhm		
	R..0017	57.11.4101	100 Ohm		
	R..0018	57.11.4104	100 kOhm		
	R..0019	57.11.4104	100 kOhm		
	R..0020	57.11.4101	100 Ohm		
	R..0021	57.11.4182	1.8 kOhm		
	R..0022	57.11.4104	100 kOhm		

Note 1 - 100 kOhm Potentiometer +log. 10%
Allen Bradley Nr. YR 104 A

Ce=Ceramic, El=Electrolytic, PP=Polypropylen, Sal=Solid aluminium

MANUFACTURER: Ex=Exar, ITT=Intermetall, Mot=Motorola, Ph=Philips,
Ra=Raytheon, Ses=Sescosem, Sie=Siemens, Sig=Signetics,
Tf=Telefunken, TI=Texas Instruments

ORIG 83/03/02

S T U D E R (00) 83/03/02 BBT REPRODUCE PREAMPLIFIER, 2 CH 1.810.711.81 PAGE 2

REPRODUCE PREAMPLIFIER 1CH 1.810.714.81 GR32 EL02

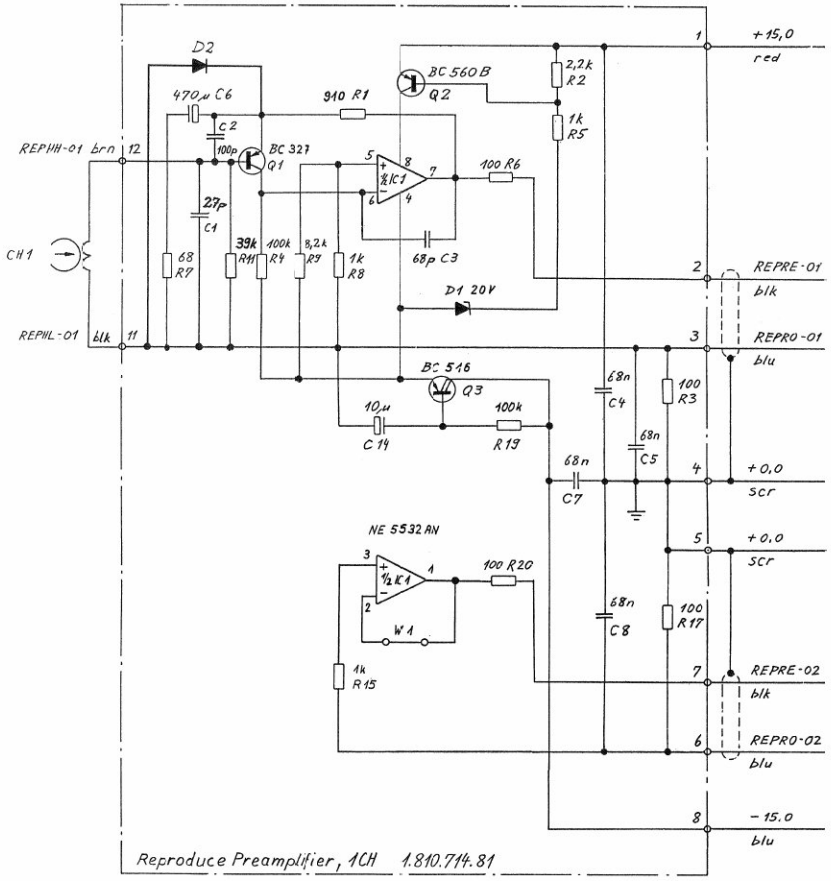

6.2.90	Gämperle	Audio Section		
STUDER	Reproduce Preamplifier 1CH	SC	1.810.714-81	PAGE 1 OF 1

REPRODUCE PREAMPLIFIER 2CH 1.810.717.81 GR32 EL06

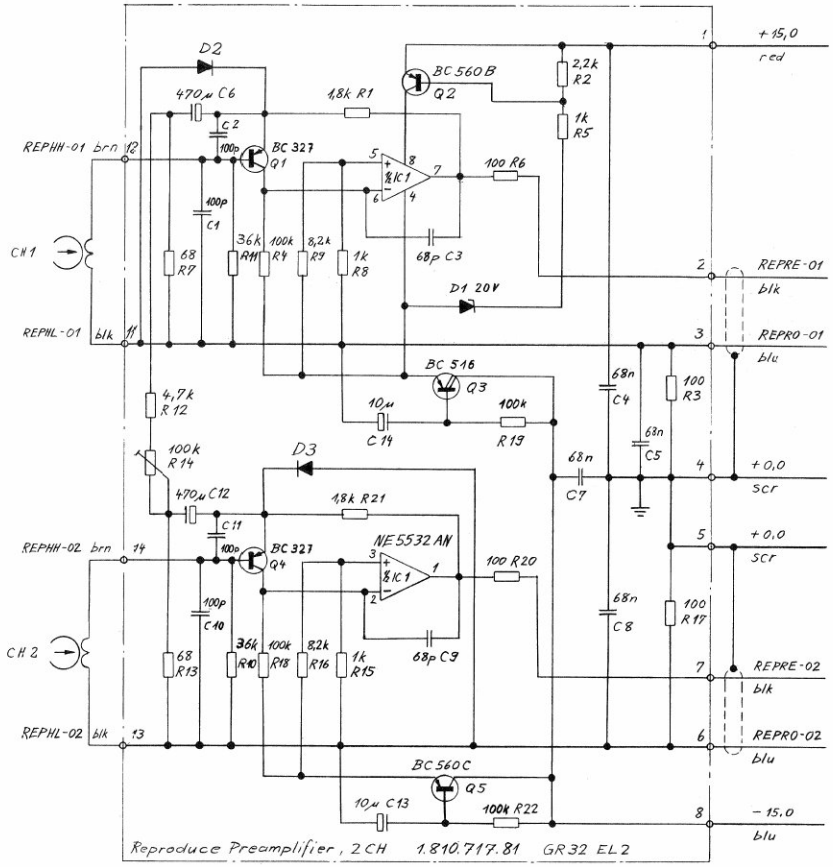

8.2.90	Gämperle	A 810 Audio Section		Part of GR 32
STUDER	Reproduce Preamplifier 2 CH	SC	1.810.717-81	PAGE 1 OF 1

REPRODUCE PREAMPLIFIER 1CH 1.810.714.81

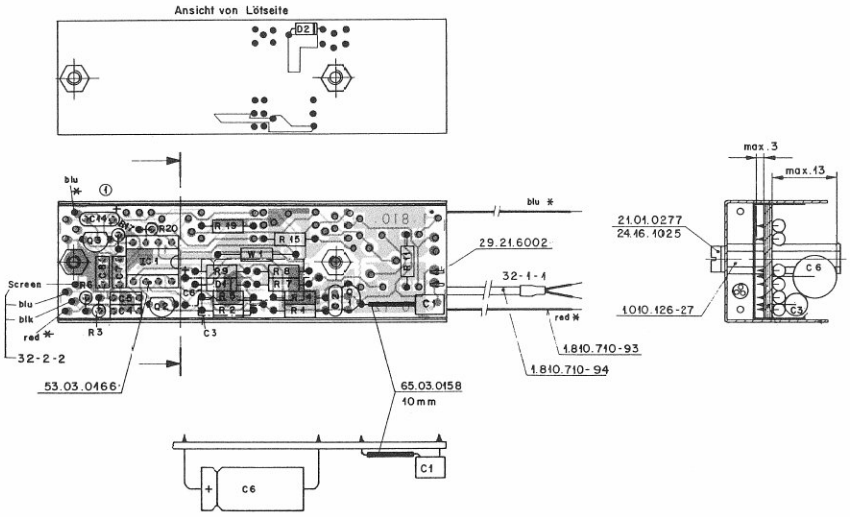

IND.	POS.NO.	PART NO.	VALUE	SPECIFICATIONS / EQUIVALENT	MANUF.
	C....1	59.99.0612	27 pF	5%, Ce	
	C....2	59.99.0622	100 pF	Ce	
	C....3	59.04.9680	68 pF	PP	ERO,NSF,Sie
	C....4	59.99.0205	68 nF	Ce	
	C....5	59.99.0205	68 nF	Ce	
	C....6	59.99.1704	470 uF	105 Grad C., 6.3V, El	
	C....7	59.99.0205	68 nF	Ce	
	C....8	59.99.0205	68 nF	Ce	
	C....14	59.26.2100	10 uF	16V, Sal	Ph
	D....1	50.04.1109	20 V Z	BZX83C 20, BZX55C 20, ZPD 20	ITT,See
	D....2	50.04.0125	1N 4448		Fe,ITT,Ph,See,Tf
	IC....1	50.09.0106	NE5532AN	XR5532AN, 5532ANB	Ex,Ra,Sig
	Q....1	50.03.0625	BC327		Sie
	Q....2	50.03.0515	BC307B	BC251B, BC557B, BC560B	ITT,Mot,Ph,Tf,TI
	Q....3	50.03.0448	BC516		Sie,TI
	R....1	57.11.3911	910 Ohm		
	R....2	57.11.3222	2.2 kOhm		
	R....3	57.11.3101	100 Ohm		
	R....4	57.11.3104	100 kOhm		
	R....5	57.11.3102	1 kOhm		
	R....6	57.11.3101	100 Ohm		
	R....7	57.11.3680	68 Ohm		
	R....8	57.11.3102	1 kOhm		
	R....9	57.11.3822	8.2 kOhm		
	R....11	57.11.3393	39 kOhm		
	R....15	57.11.3102	1 kOhm		
	R....17	57.11.3101	100 Ohm		
	R....19	57.11.3104	100 kOhm		
	R....20	57.11.3101	100 Ohm		
	W....1	57.11.3000	0 Ohm	Resistor or insulated wire bridge	

IND.	POS.NO.	PART NO.	VALUE	SPECIFICATIONS / EQUIVALENT	MANUF.

Following components are not used:

C 0009, 0010, 0011, 0012, 0013.

Q 0004, 0005.

R 0010, 0012, 0013, 0014, 0016, 0018, 0021, 0022.

Ce=Ceramic, El=Electrolytic, PP=Polypropylen, Sal=Solid aluminum

MANUFACTURER: ERO=E. Roderstein, Ex=Exar, ITT=Intermetall,
NSF=AEG-Telefunken-NSF, Mot=Motorola, Ph=Philips,
Ra=Raythion, See=Seecosem, Sie=Siemens, Sig=Signetics,
Tf=Telefunken, TI=Texas Instruments

ORIG 90/02/06

REPRODUCE PREAMPLIFIER 2CH 1.810.717.81

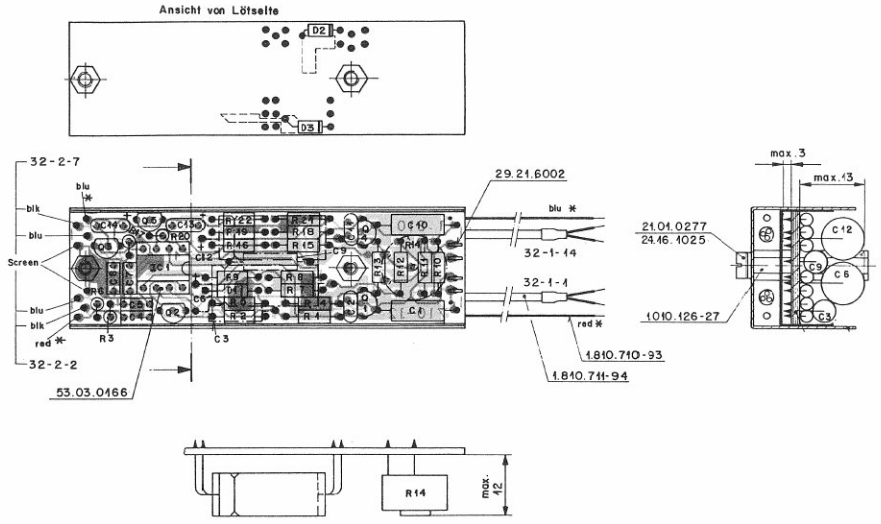

IND.	POS.NO.	PART NO.	VALUE	SPECIFICATIONS / EQUIVALENT	MANUF.
	C..0001	59.04.9560	56 pF	5%, PP	
	C..0002	59.99.0622	100 pF	Ce	
	C..0003	59.04.9680	68 pF	PP	
	C..0004	59.99.0205	68 nF	Ce	
	C..0005	59.99.0205	68 nF	Ce	
	C..0006	59.99.1704	470 uF	105 Grad C., 6.3V, El	
	C..0007	59.99.0205	68 nF	Ce	
	C..0008	59.99.0205	68 nF	Ce	
	C..0009	59.04.9680	68 pF	PP	
	C..0010	59.04.9560	56 pF	5%, PP	
	C..0011	59.99.0622	100 pF	Ce	
	C..0012	59.25.1471	470 uF	6V, El	
	C..0013	59.26.2100	10 uF	16V, Sal	Ph
	C..0014	59.26.2100	10 uF	16V, Sal	Ph
	D..0001	50.04.1109	20 V Z	BZX83C 20, BZX55C 20, ZPD 20	ITT,See
	D..0002	50.04.0125	1N4448		Fe,ITT,Ph,See,Tf
	D..0003	50.04.0125	1N4448		Fe,ITT,Ph,See,Tf
	IC.0001	50.09.0106	NE5532AN	XR5532AN, 5532ANB	Ex,Ra,Sig
	Q..0001	50.03.0625	BC327		Sie
	Q..0002	50.03.0515	BC307B	BC251B, BC557B, BC560B	ITT,Mot,Ph,Tf,TI
	Q..0003	50.03.0448	BC516		Sie,TI
	Q..0004	50.03.0625	BC327		Sie
	Q..0005	50.03.0496	BC560C		Mot,Ph,Sie,Tf
	R..0001	57.11.3182	1.8 kOhm		
	R..0002	57.11.3222	2.2 kOhm		
	R..0003	57.11.3101	100 Ohm		
	R..0004	57.11.3104	100 kOhm		
	R..0005	57.11.3102	1 kOhm		
	R..0006	57.11.3101	100 Ohm		
	R..0007	57.11.3680	68 Ohm		
	R..0008	57.11.3102	1 kOhm		
	R..0009	57.11.3822	8.2 kOhm		
	R..0010	57.11.3363	36 kOhm	1%,	

IND.	POS.NO.	PART NO.	VALUE	SPECIFICATIONS / EQUIVALENT	MANUF.
	R..0011	57.11.3363	36 kOhm	1%,	
	R..0012	57.11.3472	4.7 kOhm		
	R..0013	57.11.3680	68 Ohm		
	R..0014	58.01.4104	100 kOhm	see note 1	
	R..0015	57.11.3102	1 kOhm		
	R..0016	57.11.3822	8.2 kOhm		
	R..0017	57.11.3101	100 Ohm		
	R..0018	57.11.3104	100 kOhm		
	R..0019	57.11.3104	100 kOhm		
	R..0020	57.11.3101	100 Ohm		
	R..0021	57.11.3182	1.8 kOhm		
	R..0022	57.11.3104	100 kOhm		

Note 1 - 100 kOhm Potentiometer +log. 10%
Allen Bradley Nr. TR 104 A

Ce=Ceramic, El=Electrolytic, PP=Polypropylen, Sal=Solid aluminium

MANUFACTURER: Ex=Exar, ITT=Intermetall, Mot=Motorola, Ph=Philips,
Ra=Raythion, See=Seecosem, Sie=Siemens, Sig=Signetics,
Tf=Telefunken, TI=Texas Instruments

ORIG 90/02/08

RECORD AMPLIFIER PCB 1.820.712–00/–81 GR20 EL9/14 "ESE"
ADAPTATION PCB 1.820.740–00

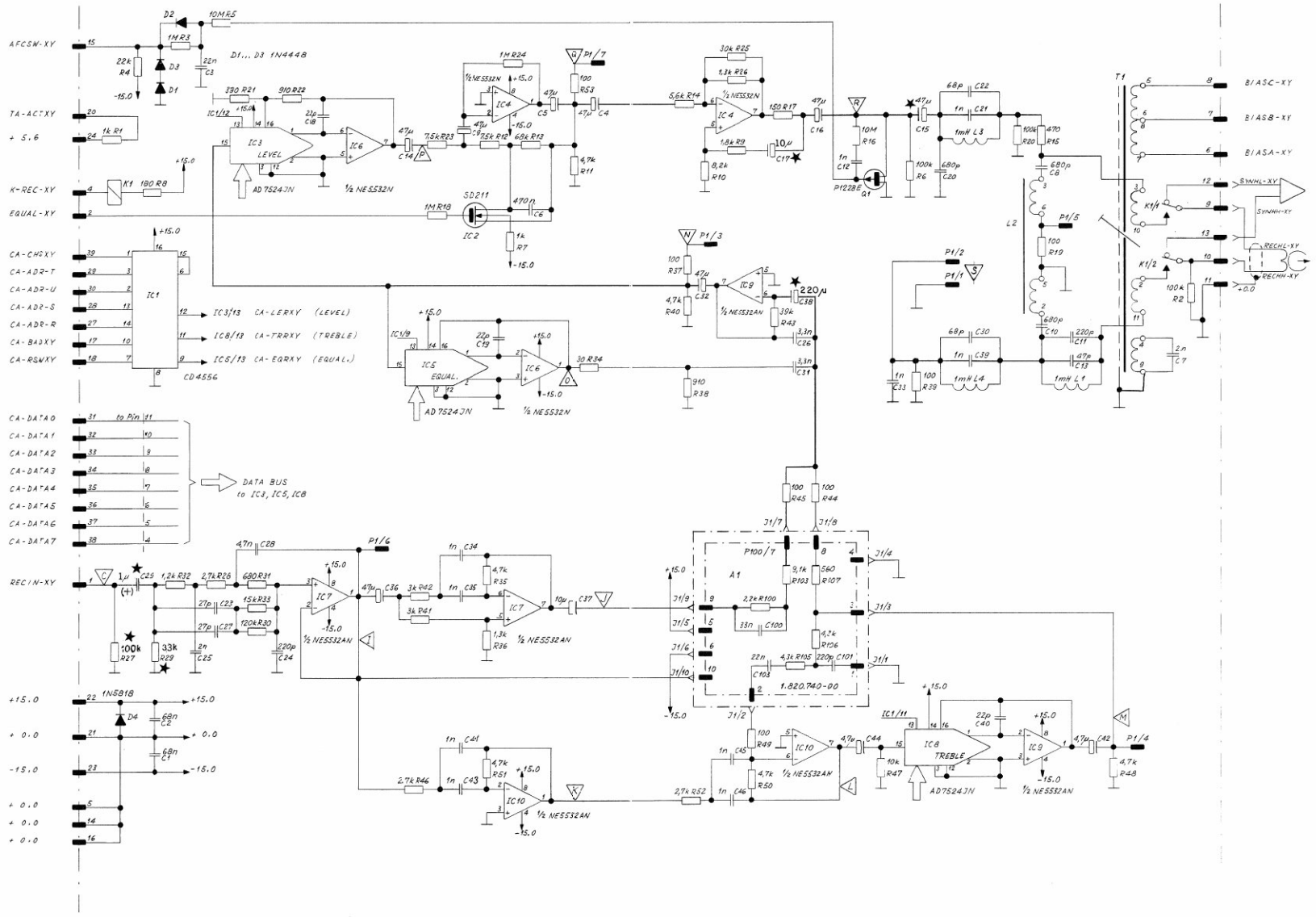

✶ HAS BEEN MODIFIED FOR 1.820.712–81

RECORD AMPLIFIER PCB 1.820.712–00 GR20 EL9/14 "ESE"

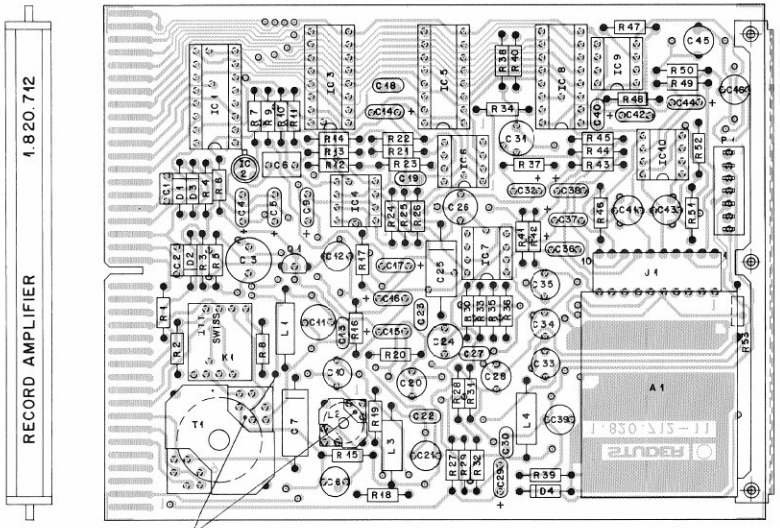

IND.	POS.NO.	PART NO.	VALUE	SPECIFICATIONS / EQUIVALENT	MANUF.
	A..0001	1.820.740.00		Adaptation Board	St
	C..0001	59.99.0205	68 nF	40V, Ce	
	C..0002	59.99.0205	68 nF	40V, Ce	
	C..0003	59.05.1223	22 nF	1%, 40V, PP	
	C..0004	59.26.0470	47 uF	Sal	Ph
	C..0005	59.26.0470	47 uF	Sal	Ph
	C..0006	59.06.5474	470 nF	5%, PETP	
	C..0007	59.12.9222	2.2 nF	1%, 500V, PS	
	C..0008	59.05.1681	680 pF	1%, PP	
	C..0009	59.26.0470	47 uF	6.3V, Sal	Ph
	C..0010	59.05.1681	680 pF	1%, PP	
	C..0011	59.05.1221	220 pF	1%, PP	
	C..0012	59.05.1102	1 nF	1%, PP	
	C..0013	59.34.2470	47 pF	5%, Co	
	C..0014	59.26.0470	47 uF	6.3V, Sal	Ph
	C..0015	59.26.0470	47 uF	6.3V, Sal	Ph
	C..0016	59.26.0470	47 uF	6.3V, Sal	Ph
	C..0017	59.26.0470	47 uF	6.3V, Sal	Ph
	C..0018	59.34.2220	22 pF	5%, Co	
	C..0019	59.34.2220	22 pF	5%, Co	
	C..0020	59.05.1681	680 pF	1%, PP	
	C..0021	59.05.1102	1 nF	1%, PP	
	C..0022	59.34.6680	68 pF	5%, Co	
	C..0023	59.34.2270	27 pF	5%, Co	
	C..0024	59.05.1221	220 pF	1%, PP	
	C..0025	59.12.7202	2 nF	1%, PS	
	C..0026	59.05.1332	3.3 nF	1%, PP	
	C..0027	59.34.2270	27 pF	5%, Co	
	C..0028	59.05.1472	4.7 nF	1%, PP	
	C..0029	59.26.0470	47 uF	6.3V, Sal	Ph
	C..0030	59.34.6680	68 pF	5%, Co	
	C..0031	59.05.1332	3.3 nF	1%, PP	
	C..0032	59.26.0470	47 uF	6.3V, Sal	Ph
	C..0033	59.05.1102	1 nF	1%, PP	
	C..0034	59.05.1102	1 nF	1%, PP	
	C..0035	59.05.1102	1 nF	1%, PP	
	C..0036	59.26.0470	47 uF	6.3V, Sal	Ph
	C..0037	59.26.2100	10 uF	16V, Sal	Ph
	C..0038	59.26.0470	47 uF	6.3V, Sal	Ph
	C..0039	59.05.1102	1 nF	1%, PP	
	C..0040	59.34.2220	22 pF	5%, Co	
	C..0041	59.05.1102	1 nF	1%, PP	
	C..0042	59.26.5479	4.7 uF	Sal	Ph
	C..0043	59.05.1102	1 nF	1%, PP	
	C..0044	59.26.5479	4.7 uF	Sal	Ph
	C..0045	59.05.1102	1 nF	1%, PP	
	C..0046	59.05.1102	1 nF	1%, PP	
	D..0001	50.04.0125	1N4448		ITT,Ph,Ses,TI
	D..0002	50.04.0125	1N4448		ITT,Ph,Ses,TI
	D..0003	50.04.0125	1N4448		ITT,Ph,Ses,TI
	D..0004	50.04.0512	1N5818	1N5819	Mot
	IC..0001	50.07.0004	MC14556BCP	CD4556BE, 4556B PC	Mot,RCA,Fc
	IC..0002	50.11.0106	SO211-EE	SD210-EE	Sig
	IC..0003	50.07.0002	AD1524JN	MP7524JN	AD1,MpS
	IC..0004	50.09.0105	NE5532N	XR5532P, 5532NB	Sig,Ex,Ra
	IC..0005	50.07.0002	AD1524JN	MP7524JN	AD1,MpS
	IC..0006	50.09.0105	NE5532N	XR5532P, 5532NB	Sig,Ex,Ra
	IC..0007	50.09.0106	NE5532AN	XR5532AN, 5532ANB	Sig,Ex,Ra
	IC..0008	50.07.0002	AD1524JN	MP7524JN	AD1,MpS
	IC..0009	50.09.0106	NE5532AN	XR5532AN, 5532ANB	Sig,Ex,Ra
	IC..0010	50.09.0106	NE5532AN	XR5532AN, 5532ANB	Sig,Ex,Ra
	J..0001	54.01.0307	10 cont.	AMP Nr. 163.683-8	
	K..0001	56.04.0171	SM D1012		ITT
	L..0001	62.01.0128	1 mH	Gowanda 16-104 or Delevan 2307-105	
	L..0002	1.022.214.00		Filter coil, 150 kHz	St
	L..0003	62.01.0128	1 mH	Gowanda 16-104 or Delevan 2307-105	
	L..0004	62.01.0128	1 mH	Gowanda 16-104 or Delevan 2307-105	

IND.	POS.NO.	PART NO.	VALUE	SPECIFICATIONS / EQUIVALENT	MANUF.
	P..0001	54.12.0007	7 cont.	AMP Mini Match System, Nr. 164 713-7	
	Q..0001	50.03.0329	P1228E	WP146	Six,TS
	R..0001	57.11.4102	1 kOhm	2%	
	R..0002	57.11.4104	100 kOhm	2%	
	R..0003	57.11.4105	1 MOhm	2%	
	R..0004	57.11.4223	22 kOhm	2%	
	R..0005	57.02.4106	10 MOhm	5%	
	R..0006	57.11.4104	100 kOhm	2%	
	R..0007	57.11.4102	1 kOhm	2%	
	R..0008	57.11.4181	180 Ohm	2%	
	R..0009	57.11.4182	1.8 kOhm	2%	
	R..0010	57.11.4822	8.2 kOhm	2%	
	R..0011	57.11.4472	4.7 kOhm	2%	
	R..0012	57.11.3752	7.5 kOhm	1%	
	R..0013	57.11.4683	68 kOhm	2%	
	R..0014	57.11.4562	5.6 kOhm	2%	
	R..0015	57.11.4471	470 Ohm	2%	
	R..0016	57.02.4106	10 MOhm	5%	
	R..0017	57.11.4151	150 Ohm	2%	
	R..0018	57.11.4105	1 MOhm	2%	
	R..0019	57.11.4101	100 Ohm	2%	
	R..0020	57.11.4104	100 kOhm	2%	
	R..0021	57.11.4391	390 Ohm	2%	
	R..0022	57.11.4911	910 Ohm	1%	
	R..0023	57.11.3752	7.5 kOhm	1%	
	R..0024	57.11.4105	1 MOhm	2%	
	R..0025	57.11.3303	30 kOhm	2%	
	R..0026	57.11.3132	1.3 kOhm	1%	
	R..0027	57.11.3330	33 Ohm	2%	
	R..0028	57.11.4272	2.7 kOhm	2%	
	R..0029	57.11.4104	100 kOhm	2%	
	R..0030	57.11.4124	120 kOhm	2%	
	R..0031	57.11.4681	680 Ohm	2%	
	R..0032	57.11.4122	1.2 kOhm	2%	
	R..0033	57.11.4153	15 kOhm	2%	
	R..0034	57.11.3300	30 Ohm	1%	
	R..0035	57.11.4472	4.7 kOhm	2%	
	R..0036	57.11.3132	1.3 kOhm	1%	
	R..0037	57.11.4101	100 Ohm	2%	
	R..0038	57.11.3911	910 Ohm	1%	
	R..0039	57.11.4101	100 Ohm	2%	
	R..0040	57.11.4472	4.7 kOhm	2%	
	R..0041	57.11.3302	3 kOhm	1%	
	R..0042	57.11.3302	3 kOhm	1%	
	R..0043	57.11.4393	39 kOhm	2%	
	R..0044	57.11.4101	100 Ohm	2%	
	R..0045	57.11.4101	100 Ohm	2%	
	R..0046	57.11.4272	2.7 kOhm	2%	
	R..0047	57.11.4103	10 kOhm	2%	
	R..0048	57.11.4472	4.7 kOhm	2%	
	R..0049	57.11.4101	100 Ohm	2%	
	R..0050	57.11.4472	4.7 kOhm	2%	
	R..0051	57.11.4472	4.7 kOhm	2%	
	R..0052	57.11.4272	2.7 kOhm	2%	
	R..0053	57.11.4101	100 Ohm	2%	
	T..0001	1.022.213.00		Bias Transformer, 150 kHz	St

Co=Ceramic, PETP=Polyester, PP=Polypropylen, PS=Polystyrol,
Sal=Solid aluminium

MANUFACTURER: ADI=Analog Devices Inc., Ex=Exar, Fc=Fairchild,
ITT=Intermetall, Mot=Motorola,
MpS=Micropower Semiconductors, Ph=Philips, Ra=Raytheon,
RCA=Radio Corp. of America, Ses=Sescosem, Sig=Signetics,
St=Studer, Si=Siliconix, TS=Teledyne Semiconductors,
TI=Texas Instruments.

ORIG 82/01/05

RECORD AMPLIFIER PCB 1.820.712–81 GR20 EL9/14 "ESE"

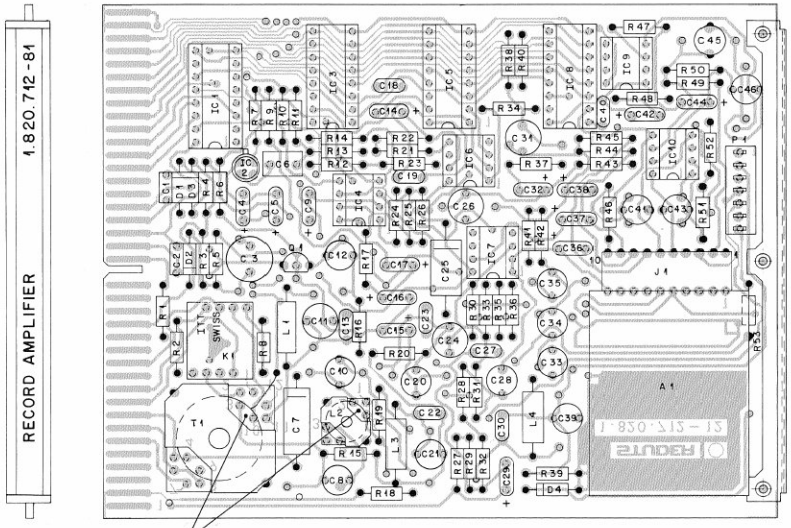

IND.	POS.NO.	PART NO.	VALUE	SPECIFICATIONS / EQUIVALENT	MANUF.
	A..0001	1.820.740.00		Adaptation Board	St
	C..0001	59.99.0205	68 nF	40V, Ce	
	C..0002	59.99.0205	68 nF	40V, Ce	
	C..0003	59.05.1223	22 nF	1%, 40V, PP	
	C..0004	59.26.0470	47 uF	Sal	Ph
	C..0005	59.26.0470	47 uF	Sal	Ph
	C..0006	59.06.5474	470 nF	5%, PETP	
	C..0007	59.12.9222	2.2 nF	1%, 500V, PS	
	C..0008	59.05.1681	680 pF	1%, PP	
	C..0009	59.26.0470	47 uF	6.3V, Sal	Ph
	C..0010	59.05.1681	680 pF	1%, PP	
	C..0011	59.05.1221	220 pF	1%, PP	
	C..0012	59.05.1102	1 nF	1%, PP	
	C..0013	59.34.2470	47 pF	5%, Co	
	C..0014	59.26.0470	47 uF	6.3V, Sal	Ph
	C..0015	59.26.0470	47 uF	6.3V, Sal	Ph
	C..0016	59.26.0470	47 uF	6.3V, Sal	Ph
	C..0017	59.26.2100	10 uF	16V, Sal	Ph
	C..0018	59.34.2220	22 pF	5%, Co	
	C..0019	59.34.2220	22 pF	5%, Co	
	C..0020	59.05.1681	680 pF	1%, PP	
	C..0021	59.05.1102	1 nF	1%, PP	
	C..0022	59.34.6680	68 pF	5%, Co	
	C..0023	59.34.2270	27 pF	5%, Co	
	C..0024	59.05.1221	220 pF	1%, PP	
	C..0025	59.12.7202	2 nF	1%, PS	
	C..0026	59.05.1332	3.3 nF	1%, PP	
	C..0027	59.34.2270	27 pF	5%, Co	
	C..0028	59.05.1472	4.7 nF	1%, PP	
	C..0029	59.06.2105	1 uF	PETP	
	C..0030	59.34.6680	68 pF	5%, Co	
	C..0031	59.05.1332	3.3 nF	1%, PP	
	C..0032	59.26.0470	47 uF	6.3V, Sal	Ph
	C..0033	59.05.1102	1 nF	1%, PP	
	C..0034	59.05.1102	1 nF	1%, PP	
	C..0035	59.05.1102	1 nF	1%, PP	
	C..0036	59.26.0470	47 uF	6.3V, Sal	Ph
	C..0037	59.26.2100	10 uF	16V, Sal	Ph
	C..0038	59.22.3221	220 uF	10V, El	
	C..0039	59.05.1102	1 nF	1%, PP	
	C..0040	59.34.2220	22 pF	5%, Co	
	C..0041	59.05.1102	1 nF	1%, PP	
	C..0042	59.26.5479	4.7 uF	Sal	Ph
	C..0043	59.05.1102	1 nF	1%, PP	
	C..0044	59.26.5479	4.7 uF	Sal	Ph
	C..0045	59.05.1102	1 nF	1%, PP	
	C..0046	59.05.1102	1 nF	1%, PP	
	D..0001	50.04.0125	1N4448		ITT,Ph,Ses,TI
	D..0002	50.04.0125	1N4448		ITT,Ph,Ses,TI
	D..0003	50.04.0125	1N4448		ITT,Ph,Ses,TI
	D..0004	50.04.0512	1N5818	1N5819	Mot
	IC..0001	50.07.0004	MC14556BCP	CD4556BE, 4556B PC	Mot,RCA,Fc
	IC..0002	50.11.0106	SO 214 DE	SD214	Six,Ph
	IC..0003	50.07.0002	AD7524JN	MP7524JN	AD1,MpS
	IC..0004	50.09.0105	NE5532N	XR5532N- 5532NB	Sig,Ex,Ra
	IC..0005	50.07.0002	AD7524JN	MP7524JN	AD1,MpS
	IC..0006	50.09.0105	NE5532N	XR5532N- 5532NB	Sig,Ex,Ra
	IC..0007	50.09.0106	NE5532AN	XR5532AN- 5532ANB	Sig,Ex,Ra
	IC..0008	50.07.0002	AD7524JN	MP7524JN	AD1,MpS
	IC..0009	50.09.0106	NE5532AN	XR5532AN- 5532ANB	Sig,Ex,Ra
	IC..0010	50.09.0106	NE5532AN	XR5532AN- 5532ANB	Sig,Ex,Ra
	J..0001	54.01.0307	10 cont.	AMP Nr. 163.683-8	
	K..0001	56.04.0171	SM D1012		ITT
	L..0001	62.01.0128	1 mH	Gowanda 16-104 or Delevan 2307-105	
	L..0002	1.022.214.00		Filter coil, 150 kHz	St
	L..0003	62.01.0128	1 mH	Gowanda 16-104 or Delevan 2307-105	
	L..0004	62.01.0128	1 mH	Gowanda 16-104 or Delevan 2307-105	

IND.	POS.NO.	PART NO.	VALUE	SPECIFICATIONS / EQUIVALENT	MANUF.
	P..0001	54.12.0007	7 cont.	AMP Mini Match System, Nr. 164 713-7	
	Q..0001	50.03.0329	P1228E	WP146	Six,TS
	R..0001	57.11.4102	1 kOhm	2%	
	R..0002	57.11.4104	100 kOhm	2%	
	R..0003	57.11.4105	1 MOhm	2%	
	R..0004	57.11.4223	22 kOhm	2%	
	R..0005	57.02.4106	10 MOhm	5%	
	R..0006	57.11.4104	100 kOhm	2%	
	R..0007	57.11.4102	1 kOhm	2%	
	R..0008	57.11.4181	180 Ohm	2%	
	R..0009	57.11.4182	1.8 kOhm	2%	
	R..0010	57.11.4822	8.2 kOhm	2%	
	R..0011	57.11.4472	4.7 kOhm	2%	
	R..0012	57.11.3752	7.5 kOhm	1%	
	R..0013	57.11.4683	68 kOhm	2%	
	R..0014	57.11.4562	5.6 kOhm	2%	
	R..0015	57.11.4471	470 Ohm	2%	
	R..0016	57.02.4106	10 MOhm	5%	
	R..0017	57.11.4151	150 Ohm	2%	
	R..0018	57.11.4105	1 MOhm	2%	
	R..0019	57.11.4101	100 Ohm	2%	
	R..0020	57.11.4104	100 kOhm	2%	
	R..0021	57.11.4391	390 Ohm	2%	
	R..0022	57.11.4911	910 Ohm	1%	
	R..0023	57.11.3752	7.5 kOhm	1%	
	R..0024	57.11.4105	1 MOhm	2%	
	R..0025	57.11.3303	30 kOhm	2%	
	R..0026	57.11.3132	1.3 kOhm	1%	
	R..0027	57.11.4104	100 kOhm	2%	
	R..0028	57.11.4272	2.7 kOhm	2%	
	R..0029	57.11.4333	33 kOhm	2%	
	R..0030	57.11.4124	120 kOhm	2%	
	R..0031	57.11.4681	680 Ohm	2%	
	R..0032	57.11.4122	1.2 kOhm	2%	
	R..0033	57.11.4153	15 kOhm	2%	
	R..0034	57.11.3300	30 Ohm	1%	
	R..0035	57.11.4472	4.7 kOhm	2%	
	R..0036	57.11.3132	1.3 kOhm	1%	
	R..0037	57.11.4101	100 Ohm	2%	
	R..0038	57.11.3911	910 Ohm	1%	
	R..0039	57.11.4101	100 Ohm	2%	
	R..0040	57.11.4472	4.7 kOhm	2%	
	R..0041	57.11.3302	3 kOhm	1%	
	R..0042	57.11.3302	3 kOhm	1%	
	R..0043	57.11.4393	39 kOhm	2%	
	R..0044	57.11.4101	100 Ohm	2%	
	R..0045	57.11.4101	100 Ohm	2%	
	R..0046	57.11.4272	2.7 kOhm	2%	
	R..0047	57.11.4103	10 kOhm	2%	
	R..0048	57.11.4472	4.7 kOhm	2%	
	R..0049	57.11.4101	100 Ohm	2%	
	R..0050	57.11.4472	4.7 kOhm	2%	
	R..0051	57.11.4472	4.7 kOhm	2%	
	R..0052	57.11.4272	2.7 kOhm	2%	
	R..0053	57.11.4101	100 Ohm	2%	
	T..0001	1.022.213.00		Bias Transformer, 150 kHz	St

Co=Ceramic, PETP=Polyester, PP=Polypropylen, PS=Polystyrol,
Sal=Solid aluminium

MANUFACTURER: ADI=Analog Devices Inc., Ex=Exar, Fc=Fairchild,
ITT=Intermetall, Mot=Motorola,
MpS=Micropower Semiconductors, Ph=Philips, Ra=Raytheon,
RCA=Radio Corp. of America, Ses=Sescosem, Sig=Signetics,
St=Studer, Si=Siliconix, TS=Teledyne Semiconductors,
TI=Texas Instruments.

ORIG 83/10/12

RECORD AMPLIFIER 1.820.712.82

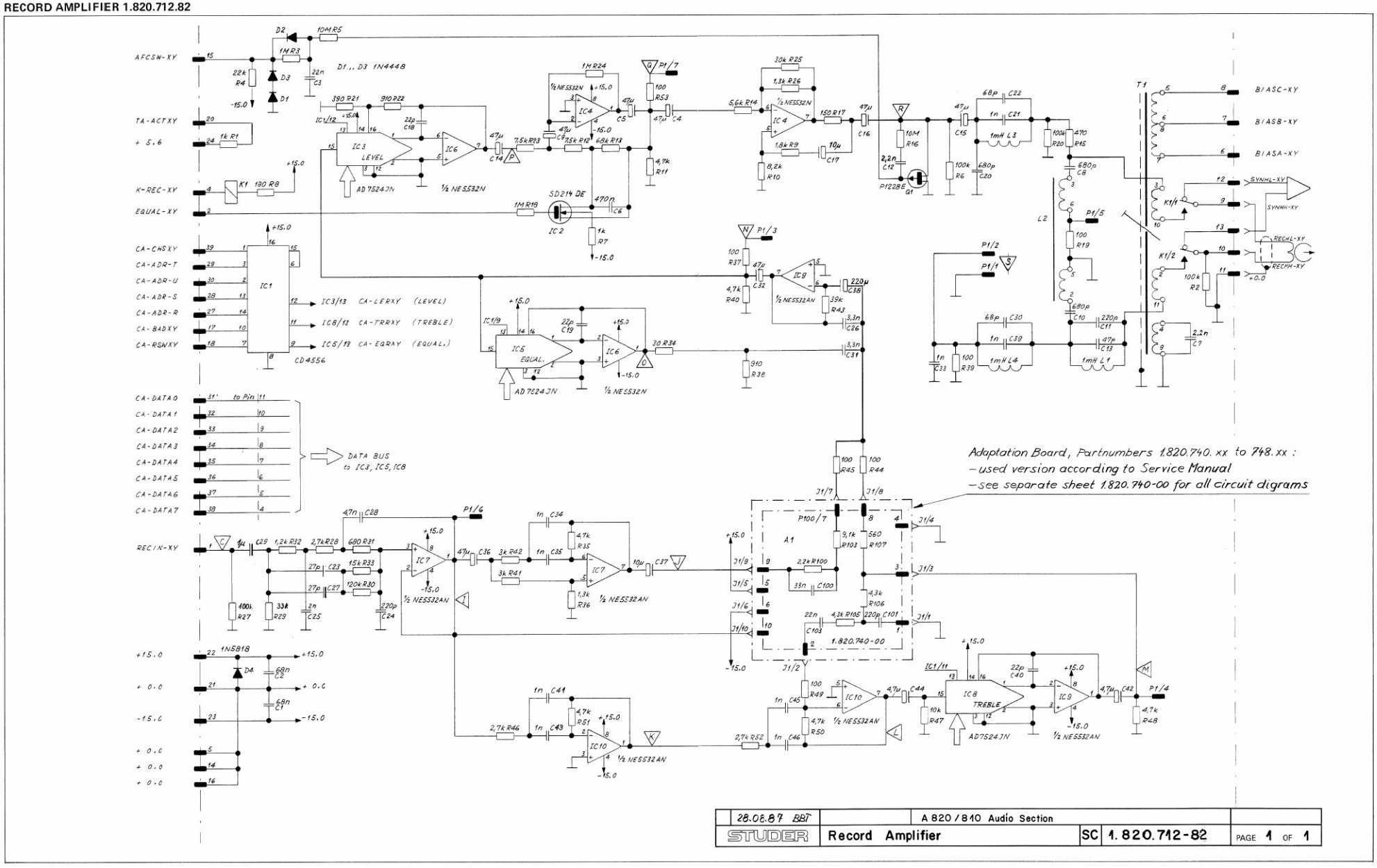

28.08.87 BBT	A 820 / 810 Audio Section		
STUDER	Record Amplifier	SC 1.820.712-82	PAGE 1 OF 1

RECORD AMPLIFIER 1.820.712.82

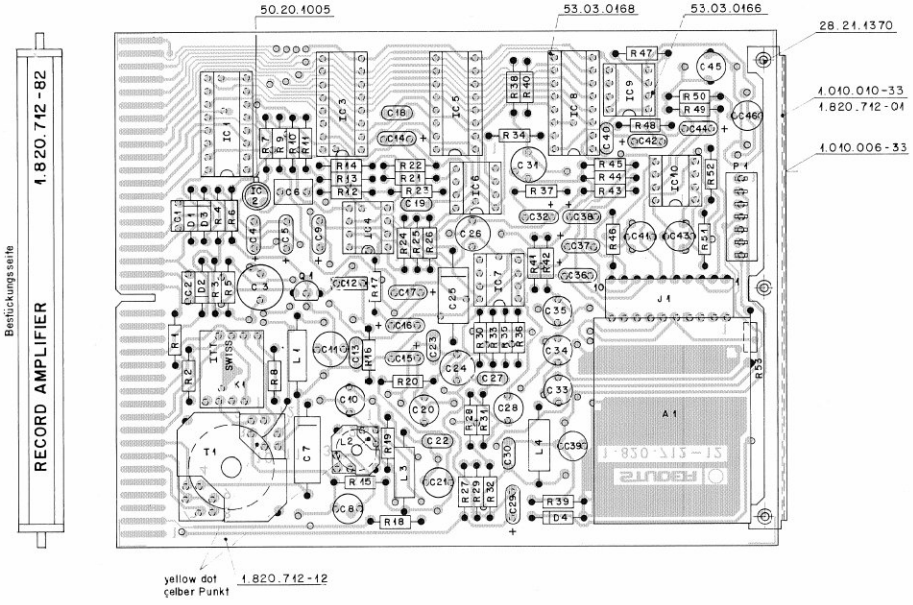

IND.	POS.NO.	PART NO.	VALUE	SPECIFICATIONS / EQUIVALENT	MANUF.
	A..0001		see note 1	Adaptation Board	St
	C..0001	59.99.0205	68 nF	48V, Ce	
	C..0002	59.99.0205	68 nF	48V, Ce	
	C..0003	59.05.1223	22 nF	1%, 48V, PP	
	C..0004	59.26.0470	47 uF	Sal	Ph
	C..0005	59.26.0470	47 uF	Sal	Ph
	C..0006	59.06.5474	470 nF	5%, PETP	
	C..0007	59.12.9222	2.2 nF	1%, 50V, PS	
	C..0008	59.05.1681	680 pF	1%, PP	
	C..0009	59.26.0470	47 uF	6.3V, Sal	Ph
	C..0010	59.05.1681	680 pF	1%, PP	
	C..0011	59.05.1221	220 pF	1%, PP	
	C..0012	59.06.0222	2.2 nF	10%, PETP	
	C..0013	59.34.2470	47 pF	5%, Ce	
	C..0014	59.26.0470	47 uF	6.3V, Sal	Ph
	C..0015	59.26.0470	47 uF	6.3V, Sal	Ph
	C..0016	59.26.0470	47 uF	6.3V, Sal	Ph
	C..0017	59.26.2100	10 uF	16V, Sal	Ph
	C..0018	59.34.2220	22 pF	5%, Ce	
	C..0019	59.34.2220	22 pF	5%, Ce	
	C..0020	59.05.1681	680 pF	1%, PP	
	C..0021	59.05.1102	1 nF	1%, PP	
	C..0022	59.34.4680	68 pF	5%, Ce	
	C..0023	59.34.2270	27 pF	5%, Ce	
	C..0024	59.05.1221	220 pF	1%, PP	
	C..0025	59.12.7202	2 nF	1%, PS	
	C..0026	59.05.1332	3.3 nF	1%, PP	
	C..0027	59.34.2270	27 pF	5%, Ce	
	C..0028	59.05.1472	4.7 nF	1%, PP	
	C..0029	59.06.5105	1 uF	PETP	
	C..0030	59.34.4680	68 pF	5%, Ce	
	C..0031	59.05.1332	3.3 nF	1%, PP	
	C..0032	59.26.0470	47 uF	6.3V Sal	Ph
	C..0033	59.05.1102	1 nF	1%, PP	
	C..0034	59.05.1102	1 nF	1%, PP	
	C..0035	59.05.1102	1 nF	1%, PP	

IND.	POS.NO.	PART NO.	VALUE	SPECIFICATIONS / EQUIVALENT	MANUF.
	C..0036	59.26.0470	47 uF	6.3V, Sal	Ph
	C..0037	59.26.2100	10 uF	16V, Sal	Ph
	C..0038	59.22.3221	220 uF	10V, El	
	C..0039	59.05.1102	1 nF	1%, PP	
	C..0040	59.34.2220	22 pF	5%, Ce	
	C..0041	59.05.1102	1 nF	1%, PP	
	C..0042	59.26.5479	4.7 uF	Sal	Ph
	C..0043	59.05.1102	1 nF	1%, PP	
	C..0044	59.26.5479	4.7 uF	Sal	Ph
	C..0045	59.05.1102	1 nF	1%, PP	
	C..0046	59.05.1102	1 nF	1%, PP	
	D..0001	50.04.0125	1N4448		ITT,Ph,Sem,TI
	D..0002	50.04.0125	1N4448		ITT,Ph,Sem,TI
	D..0003	50.04.0125	1N4448		ITT,Ph,Sem,TI
	D..0004	50.04.0512	1N5818	1N5819	Mot
	IC.0001	50.07.0004	MC14556BCP	CD4556BE, 4556B PC	Mot,RCA,Fc
	IC.0002	50.11.0106	SD 214 DE	SSD214	Six,Ph
	IC.0003	50.07.0002	AD7524JN	MF7524JN	ADI,MpS
	IC.0004	50.09.0105	NE5532N	XR5532N, 5532NB	Sig,Ex,Na
	IC.0005	50.07.0002	AD7524JN	MF7524JN	ADI,MpS
	IC.0006	50.09.0105	NE5532N	XR5532N, 5532NB	Sig,Ex,Na
	IC.0007	50.09.0106	NE5532AN	XR5532AN, 5532ANB	Sig,Ex,Na
	IC.0008	50.07.0002	AD7524JN	MF7524JN	ADI,MpS
	IC.0009	50.09.0106	NE5532AN	XR5532AN, 5532ANB	Sig,Ex,Na
	IC.0010	50.09.0106	NE5532AN	XR5532AN, 5532ANB	Sig,Ex,Na
	J..0001	54.01.0307	10 cont.	AMP Nr. 163.683-8	
	K..0001	56.04.0171	SW D1012		ITT
	L..0001	62.01.0128	1 mH	Gewanda 16-104 or Delevan 2307-105	
	L..0002	1.022.2.4.00		Filter coil, 150 kHz	St
	L..0003	62.01.0128	1 mH	Gewanda 16-104 or Delevan 2307-105	
	L..0004	62.01.0128	1 mH	Gewanda 16-104 or Delevan 2307-105	

IND.	POS.NO.	PART NO.	VALUE	SPECIFICATIONS / EQUIVALENT	MANUF.
	P..0001	54.12.0007	7 cont.	AMP Mini Match System, Nr. 164 713-7	
	Q..0001	50.03.0329	P1228E	WP146	Six,TS
	R..0001	57.11.4102	1 kOhm	2%	
	R..0002	57.11.4104	100 kOhm	2%	
	R..0003	57.11.4105	1 MOhm	2%	
	R..0004	57.11.4223	22 kOhm	2%	
	R..0005	57.11.5106	10 MOhm	5%	
	R..0006	57.11.4104	100 kOhm	2%	
	R..0007	57.11.4102	1 kOhm	2%	
	R..0008	57.11.4181	180 Ohm	2%	
	R..0009	57.11.4182	1.8 kOhm	2%	
	R..0010	57.11.4822	8.2 kOhm	2%	
	R..0011	57.11.4472	4.7 kOhm	2%	
	R..0012	57.11.3752	7.5 kOhm	1%	
	R..0013	57.11.4683	68 kOhm	2%	
	R..0014	57.11.4562	5.6 kOhm	2%	
	R..0015	57.11.4471	470 Ohm	2%	
	R..0016	57.11.5106	10 MOhm	5%	
	R..0017	57.11.4151	150 Ohm	2%	
	R..0018	57.11.4105	1 MOhm	2%	
	R..0019	57.11.4101	100 Ohm	2%	
	R..0020	57.11.4104	100 kOhm	2%	
	R..0021	57.11.4391	390 Ohm	2%	
	R..0022	57.11.3911	910 Ohm	1%	
	R..0023	57.11.3752	7.5 kOhm	1%	
	R..0024	57.11.4105	1 MOhm	2%	
	R..0025	57.11.4303	30 kOhm	2%	
	R..0026	57.11.3132	1.3 kOhm	1%	
	R..0027	57.11.4104	100 kOhm	2%	
	R..0028	57.11.4272	2.7 kOhm	2%	
	R..0029	57.11.4333	33 kOhm	2%	
	R..0030	57.11.4124	120 kOhm	2%	
	R..0031	57.11.4681	680 Ohm	2%	
	R..0032	57.11.4122	1.2 kOhm	2%	
	R..0033	57.11.4153	15 kOhm	2%	

IND.	POS.NO.	PART NO.	VALUE	SPECIFICATIONS / EQUIVALENT	MANUF.
	R..0034	57.11.3300	30 Ohm	1%	
	R..0035	57.11.4472	4.7 kOhm	2%	
	R..0036	57.11.3132	1.3 kOhm	1%	
	R..0037	57.11.4101	100 Ohm	2%	
	R..0038	57.11.3911	910 Ohm	1%	
	R..0039	57.11.4101	100 Ohm	2%	
	R..0040	57.11.4472	4.7 kOhm	2%	
	R..0041	57.11.3302	3 kOhm	1%	
	R..0042	57.11.3302	3 kOhm	1%	
	R..0043	57.11.4393	39 kOhm	2%	
	R..0044	57.11.4101	100 Ohm	2%	
	R..0045	57.11.4101	100 Ohm	2%	
	R..0046	57.11.4272	2.7 kOhm	2%	
	R..0047	57.11.4103	10 kOhm	2%	
	R..0048	57.11.4472	4.7 kOhm	2%	
	R..0049	57.11.4101	100 Ohm	2%	
	R..0050	57.11.4472	4.7 kOhm	2%	
	R..0051	57.11.4472	4.7 kOhm	2%	
	R..0052	57.11.4272	2.7 kOhm	2%	
	R..0053	57.11.4101	100 Ohm	2%	
	T..0001	1.022.213.00		Bias Transformer, 150 kHz	St

Note 1: Actual use of Adaptation Board (Studer nr. 1.820.740.00 up to 1.820.768.00) according to Service Manual.

Ce=Ceramic, PETP=Polyester, PP=Polypropylen, PS=Polystyrol,
Sal=Solid aluminium

MANUFACTURER: ADI=Analog Devices Inc., Ex=Exar, Fc=Fairchild,
ITT=Intermetall, Mot=Motorola,
MpS=Micropower Semiconductors, Ph=Philips, Ra=Raytheon,
RCA=Radio Corp. of America, Ses=Sescosem, Sig=Signetics,
St=Studer, Six=Siliconix, TS=Teledyne Semiconductors,
TI=Texas Instruments.

GNIS 87/08/28

ADAPTATION PCB 1.820.740–00

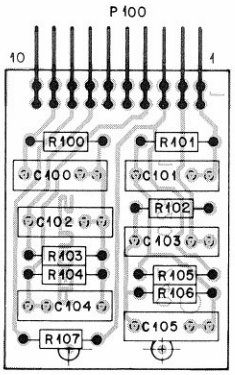

IND.	POS.NO.	PART NO.	VALUE	SPECIFICATIONS / EQUIVALENT	MANUF.
	C..0100	59.12.2223	22 nF	5%	
	C..0101	59.11.6221	220 pF	5%	
	C..0102		not used		
	C..0103	59.02.5333	33 nF	5%	
	C..0104		not used		
	C..0105		not used		
	P..0100	54.01.0271	10 cont.	AMP-Nr. 163.740-8	
	R..0100	57.11.4222	2.2 kOhm	2%	
	R..0101		not used		
	R..0102		not used		
	R..0103	57.11.3912	9.1 kOhm	2%	
	R..0104		not used		
	R..0105	57.11.3432	4.3 kOhm	1%	
	R..0106	57.11.3432	4.3 kOhm	1%	
	R..0107	57.11.4561	560 Ohm	2%	

ORIG 82/06/28

S T U D E R 82/06/28 PB ADAPTATION BOARD 1.820.740.00 PAGE 1

ADAPTION BOARD 1.820.740.00/81 FOR 1.317....HEADS

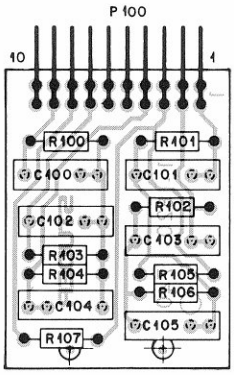

IND.	POS.NO.	PART NO.	VALUE	SPECIFICATIONS / EQUIVALENT	MANUF.
	C..0100	59.12.2223	22 nF	5%	
	C..0101	59.11.6221	220 pF	5%	
	C..0102		not used		
	C..0103	59.02.5333	33 nF	5%	
	C..0104		not used		
	C..0105		not used		
	P..0100	54.01.0271	10 cont.	AMP-Nr. 163.740-8	
	R..0100	57.11.4222	2.2 kOhm	2%	
	R..0101		not used		
	R..0102		not used		
	R..0103	57.11.3912	9.1 kOhm	2%	
	R..0104		not used		
	R..0105	57.11.3432	4.3 kOhm	1%	
	R..0106	57.11.3432	4.3 kOhm	1%	
	R..0107	57.11.4561	560 Ohm	2%	

ORIG 82/06/28

S T U D E R (00) 82/06/28 PB ADAPTATION BOARD 1.820.740.00 PAGE 1

1.820.740.00
1.820.740.81

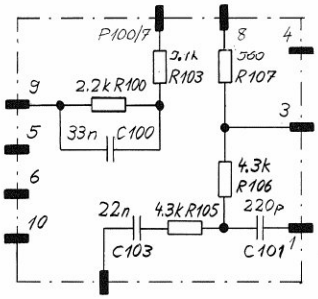

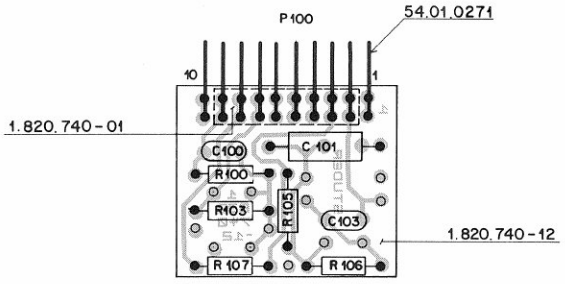

IND.	POS.NO.	PART NO.	VALUE	SPECIFICATIONS / EQUIVALENT	MANUF.
(00)	C..0100	59.06.5223	22 nF	5%	
(01)	C..0100	59.06.5333	33 nF	5%	
	C..0101	59.04.8221	220 pF	5%	
	C..0102		not used		
(00)	C..0103	59.06.5333	33 nF	5%	
(01)	C..0103	59.06.5223	22 nF	5%	
	C..0104		not used		
	C..0105		not used		
	P..0100	54.01.0271	10 cont.	AMP-Nr. 163.740-8	
	R..0100	57.11.4222	2.2 kOhm	2%	
	R..0101		not used		
	R..0102		not used		
	R..0103	57.11.3912	9.1 kOhm	2%	
	R..0104		not used		
	R..0105	57.11.3432	4.3 kOhm	1%	
	R..0106	57.11.3432	4.3 kOhm	1%	
	R..0107	57.11.4561	560 Ohm	2%	

(01) 86.12.03 Correction of error: C100 and C103 exchanged.

ORIG 85/04/25 (01) 85/12/03

S T U D E R (01) 86/12/03 BD ADAPTATION BOARD PL 1.820.740.81 PAGE 1

ADAPTATION BOARD 1.820.741.00

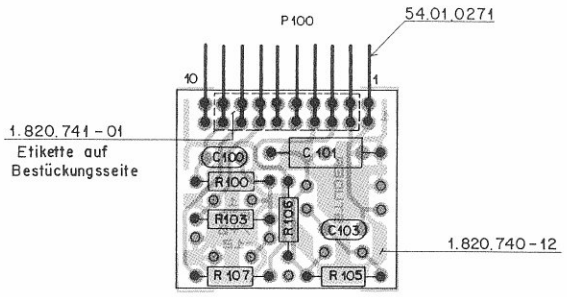

IND.	POS.NO.	PART NO.	VALUE	SPECIFICATIONS / EQUIVALENT	MANUF.
	C..0100	59.06.5682	6.8 nF	5%	
	C..0101	59.04.8221	220 pF	5%	
	C..0102		not used		
	C..0103	59.06.5223	22 nF	5%	
	C..0104		not used		
	C..0105		not used		
	P..0100	54.01.0271	10 cont.	AMP-Nr. 163.740-8	
	R..0100	57.11.4472	4.7 kOhm	2%	
	R..0101		not used		
	R..0102		not used		
	R..0103	57.11.4682	6.8 kOhm	2%	
	R..0104		not used		
	R..0105	57.11.3432	4.3 kOhm	1%	
	R..0106	57.11.3432	4.3 kOhm	1%	
	R..0107	57.11.4102	1.0 kOhm	2%	

ORIG 87/04/13

S T U D E R (00) 87/04/13 BD ADAPTATION BOARD PL 1.820.741.00 PAGE 1

HF DRIVER PCB 1.820.713–00 GR20 EL8/13 "ESE"

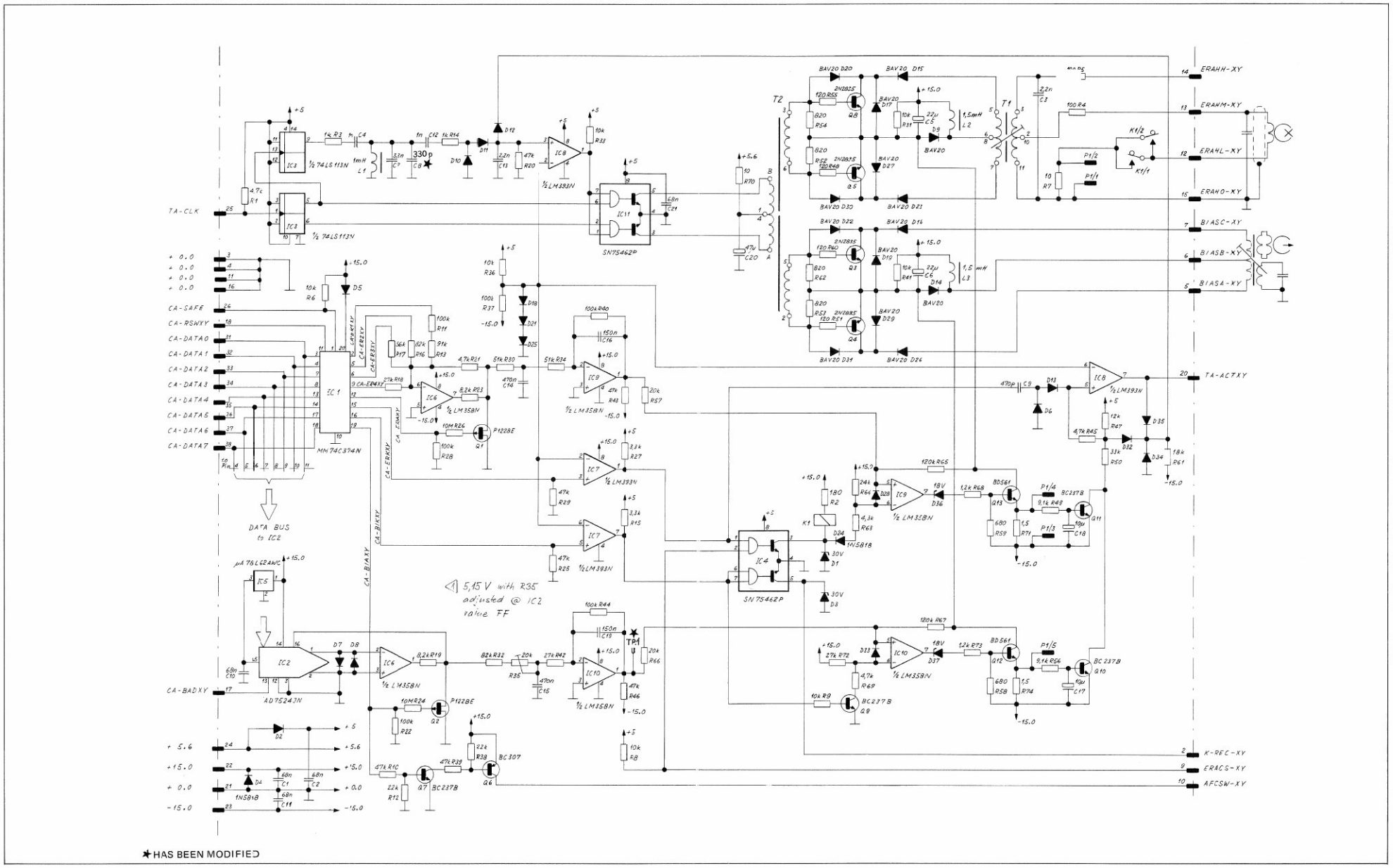

HF DRIVER PCB 1.820.713–00 GR20 EL8/13 "ESE"

1.820.713 HF DRIVER

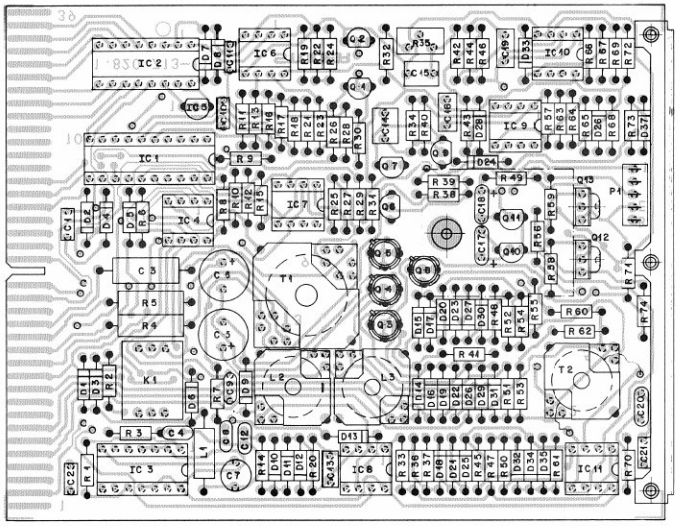

LAYOUT 1.820.713–11

1.820.713 HF DRIVER

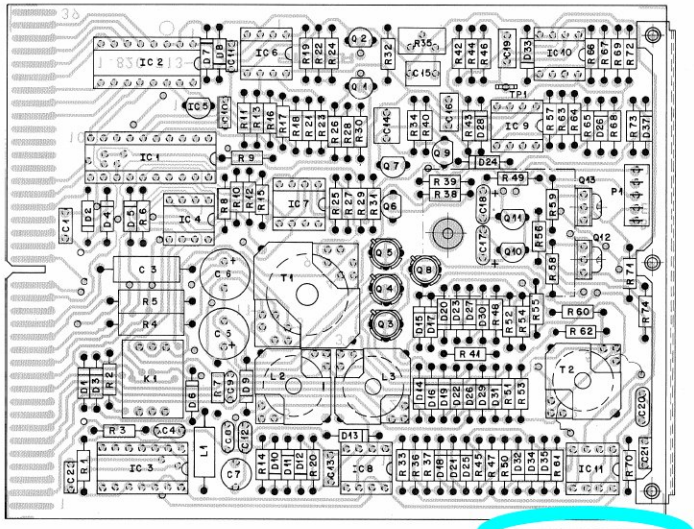

LAYOUT 1.820.713–12

IND.	POS.NO.	PART NO.	VALUE	SPECIFICATIONS / EQUIVALENT	MANUF.
	C..0001	59.99.0205	68 nF	-20%, Ce	
	C..0002	59.99.0205	68 nF	-20%, Ce	
	C..0003	59.12.0222	2.2 nF	1%	
	C..0004	59.32.4102	1 nF	-20%, Ce	
	C..0005	59.22.4220	22 uF	50V, El	
	C..0006	59.22.4220	22 uF	50V, El	
	C..0007	59.05.3332	3.3 nF	1%, PP	
(00)	C..0008	59.32.2681	680 pF	-20%, Ce	
(02)	C..0008	59.34.3331	330 pF	-20%, Ce	
	C..0009	59.32.1471	470 pF	-20%, Ce	
	C..0010	59.99.0205	68 nF	-20%, Ce	
	C..0011	59.99.0205	68 nF	-20%, Ce	
	C..0012	59.32.4102	1 nF	-20%, Ce	
	C..0013	59.06.0222	2.2 nF	10%	
	C..0014	59.06.1474	470 nF	5%	
	C..0015	59.06.1474	470 nF	5%	
	C..0016	59.06.5154	150 nF	5%	
	C..0017	59.26.4100	10 uF	20%, 16V, Sal	Ph
	C..0018	59.26.4100	10 uF	20%, 16V, Sal	Ph
	C..0019	59.06.5154	150 nF	5%	
	C..0020	59.26.0470	47 uF	20%, 6.3V, Sal	Ph
	C..0021	59.99.0205	68 nF	-20%, Ce	
	D..0001	50.04.0125	30 V Z	ZPD10	ITT
	D..0002	50.04.0125	1N4448		ITT,Ph,Ses,TI
	D..0003	50.04.0125	30 V Z	ZPD10	ITT
	D..0004	50.04.0512	1N5818	1N5819	Mot
	D..0005	50.04.0125	1N4448		ITT,Ph,Ses,TI
	D..0006	50.04.0125	1N4448		ITT,Ph,Ses,TI
	D..0007	50.04.0125	1N4448		ITT,Ph,Ses,TI
	D..0008	50.04.0125	1N4448		ITT,Ph,Ses,TI
	D..0009	50.04.0133	BAY20		ITT,Ph
	D..0010	50.04.0125	1N4448		ITT,Ph,Ses,TI
	D..0011	50.04.0125	1N4449		ITT,Ph,Ses,TI
	D..0012	50.04.0125	1N4448		ITT,Ph,Ses,TI
	D..0013	50.04.0125	1N4448		ITT,Ph,Ses,TI
	D..0014	50.04.0133	BAY20		ITT,Ph

IND.	POS.NO.	PART NO.	VALUE	SPECIFICATIONS / EQUIVALENT	MANUF.
	D..0015	50.04.0133	BAY20		ITT,Ph
	D..0016	50.04.0133	BAY20		ITT,Ph
	D..0017	50.04.0133	BAY20		ITT,Ph
	D..0018	50.04.0125	1N4448		ITT,Ph,Ses,TI
	D..0019	50.04.0133	BAY20		ITT,Ph
	D..0020	50.04.0133	BAY20		ITT,Ph
	D..0021	50.04.0125	1N4448		ITT,Ph,Ses,TI
	D..0022	50.04.0133	BAY20		ITT,Ph
	D..0023	50.04.0133	BAY20		ITT,Ph
	D..0024	50.04.0512	1N5818	1N5819	Mot
	D..0025	50.04.0125	1N4448		ITT,Ph,Ses,TI
	D..0026	50.04.0133	BAY20		ITT,Ph
	D..0027	50.04.0133	BAY20		ITT,Ph
	D..0028	50.04.0125	1N4448		ITT,Ph,Ses,TI
	D..0029	50.04.0133	BAY20		ITT,Ph
	D..0030	50.04.0133	BAY20		ITT,Ph
	D..0031	50.04.0133	BAY20		ITT,Ph
	D..0032	50.04.0125	1N4448		ITT,Ph,Ses,TI
	D..0033	50.04.0125	1N4448		ITT,Ph,Ses,TI
	D..0034	50.04.0125	1N4448		ITT,Ph,Ses,TI
	D..0035	50.04.0125	1N4448		ITT,Ph,Ses,TI
	D..0036	50.04.1122	18 V Z	BZX83C 18, BZX55C 18, ZPD 18	ITT,Ses
	D..0037	50.04.1122	18 V Z	BZX83C 18, BZX55C 18, ZPD 18	ITT,Ses
	IC.0001	50.07.0003	MM74C374N		NS
	IC.0002	50.07.0002	AD7524JN	MP7524JN	ADI,MpS
	IC.0003	50.06.0113	SN74LS113N	N74LS113N	TI,Sig
	IC.0004	50.05.0227	SN7546ZP	SN74462JG, SN75472P	TI
	IC.0005	50.10.0101	AD78L62AWC	FBL8465	Fc,Sig
	IC.0006	50.05.0286	LM358N	LM358P	Mot,NS,TI
	IC.0007	50.05.0283	LM393	LM393N	NS,TI
	IC.0008	50.05.0283	LM393	LM393N	NS,TI
	IC.0009	50.05.0286	LM358N	LM358P	Mot,NS,TI
	IC.0010	50.05.0286	LM358N	LM358P	Mot,NS,TI
	IC.0011	50.05.0227	SN7546ZP	SN74462JG, SN75472N	TI
	K..0001	56.04.0171	SM 01012		ITT

IND.	POS.NO.	PART NO.	VALUE	SPECIFICATIONS / EQUIVALENT	MANUF.
	L..0001	62.01.0128	1 mH	Gowanda 1s-104 or Delevan 2307-105	
	L..0002	1.022.197.00	1.5 mH		St
	L..0003	1.022.197.00	1.5 mH		St
	P..0001	54.12.0005	5 cont.	AMP Mini Match System, Nr. 184 713-5	
	Q..0001	50.03.0329	P1228E	WP146	TS,Sx
	Q..0002	50.03.0329	P1228E	WP146	TS,Sx
	Q..0003	50.03.0511	2N2895	BFR18, sel., UcbO min. 120V	Mot,SGS
	Q..0004	50.03.0511	2N2895	BFR18, sel., UcbO min. 120V	Mot,SGS
	Q..0005	50.03.0511	2N2895	BFR18, sel., UcbO min. 120V	Mot,SGS
	Q..0006	50.03.0515	BC307B	BC258,BC558,BC560B	ITT,Mot,NEC,Ph,Tf
	Q..0007	50.03.0436	BC237B	BC550B, BC547B	ITT,Mot,Ph,Sie,Tf
	Q..0008	50.03.0511	2N2895	BFR18, sel., UcbO min. 120V	Mot,SGS
	Q..0009	50.03.0436	BC237B	BC550B, BC547B	ITT,Mot,Ph,Sie,Tf
	Q..0010	50.03.0436	BC237B	BC550B, BC547B	ITT,Mot,Ph,Sie,Tf
	Q..0011	50.03.0436	BC237B	BC550B, BC547B	ITT,Mot,Ph,Sie,Tf
	Q..0012	50.03.0493	BD561	BD435	Mot,Ph,Nom
	Q..0013	50.03.0493	BD561	BD435	Mot,Ph,Nom
	R..0001	57.11.4472	4.7 kOhm	2%	
	R..0002	57.11.4181	180 Ohm	2%	
	R..0003	57.11.4102	1 kOhm	2%	
	R..0004	57.13.4101	100 Ohm	5%, 0.5W	
	R..0005	57.13.4101	100 Ohm	5%, 0.5W	
	R..0006	57.11.4103	10 kOhm	2%	
	R..0007	57.11.4100	10 Ohm	2%	
	R..0008	57.11.4103	10 kOhm	2%	
	R..0009	57.11.4103	10 kOhm	2%	
	R..0010	57.11.4473	47 kOhm	2%	
	R..0011	57.11.4104	100 kOhm	2%	
	R..0012	57.11.4223	22 kOhm	2%	
	R..0013	57.11.4913	91 kOhm	1%	
	R..0014	57.11.4102	1 kOhm	2%	
	R..0015	57.11.4332	3.3 kOhm	2%	
	R..0016	57.11.4823	82 kOhm	2%	
	R..0017	57.11.4563	56 kOhm	2%	

IND.	POS.NO.	PART NO.	VALUE	SPECIFICATIONS / EQUIVALENT	MANUF.
	R..0018	57.11.4273	27 kOhm	2%	
	R..0019	57.11.4822	8.2 kOhm	2%	
	R..0020	57.11.4473	47 kOhm	2%	
	R..0021	57.11.4472	4.7 kOhm	2%	
	R..0022	57.11.4104	100 kOhm	2%	
	R..0023	57.11.4822	8.2 kOhm	2%	
	R..0024	57.11.6106	1C MOhm	10%	
	R..0025	57.11.4473	47 kOhm	2%	
	R..0026	57.11.6106	1C MOhm	10%	
	R..0027	57.11.4332	3.3 kOhm	2%	
	R..0028	57.11.4104	100 kOhm	2%	
	R..0029	57.11.4473	47 kOhm	2%	
	R..0030	57.11.3513	51 kOhm	1%	
	R..0031	57.11.4103	1C kOhm	2%	
	R..0032	57.11.4823	82 kOhm	2%	
	R..0033	57.11.4103	1C kOhm	2%	
	R..0034	57.11.3513	51 kOhm	1%	
(00)	R..0035	58.01.7203	2C kOhm		
(01)	R..0035	58.01.9203	2C kOhm	See note 1	
	R..0036	57.11.4103	1C kOhm	2%	
	R..0037	57.11.4104	100 kOhm	2%	
	R..0038	57.11.4223	22 kOhm	2%	
	R..0039	57.11.4473	47 kOhm	2%	
	R..0040	57.11.4104	100 kOhm	2%	
	R..0041	57.11.4103	1C kOhm	2%	
	R..0042	57.11.4273	27 kOhm	2%	
	R..0043	57.11.4473	47 kOhm	2%	
	R..0044	57.11.4104	100 kOhm	2%	
	R..0045	57.11.4472	4.7 kOhm	2%	
	R..0046	57.11.4473	47 kOhm	2%	
	R..0047	57.11.4123	12 kOhm	2%	
	R..0048	57.11.4121	120 Ohm	2%	
	R..0049	57.11.3912	9.1 kOhm	1%	
	R..0050	57.11.4333	33 kOhm	2%	
	R..0051	57.11.4121	120 Ohm	2%	
	R..0052	57.11.4821	820 Ohm	2%	
	R..0053	57.11.4821	820 Ohm	2%	

IND.	POS.NO.	PART NO.	VALUE	SPECIFICATIONS / EQUIVALENT	MANUF.
	R..0054	57.11.4821	820 Ohm	2%	
	R..0055	57.11.4121	120 Ohm	2%	
	R..0056	57.11.3912	9.1 kOhm	1%	
	R..0057	57.11.3203	20 kOhm	1%	
	R..0058	57.11.4681	680 Ohm	2%	
	R..0059	57.11.4681	680 Ohm	2%	
	R..0060	57.11.4121	120 Ohm	2%	
	R..0061	57.11.4183	18 kOhm	2%	
	R..0062	57.11.4821	820 Ohm	2%	
	R..0063	57.11.3432	4.3 kOhm	1%	
	R..0064	57.11.3243	24 kOhm	1%	
	R..0065	57.11.4124	120 kOhm	2%	
	R..0066	57.11.3203	20 kOhm	1%	
	R..0067	57.11.4124	120 kOhm	2%	
	R..0068	57.11.4122	1.2 kOhm	2%	
	R..0069	57.11.4472	4.7 kOhm	2%	
	R..0070	57.11.4100	10 Ohm	2%	
	R..0071	57.11.4159	1.5 Ohm	2%	
	R..0072	57.11.4273	27 kOhm	2%	
	R..0073	57.11.4122	1.2 kOhm	2%	
	R..0074	57.11.4159	1.5 Ohm	2%	
	T..0001	1.022.212.00		Erase Transformer, 150kHz	St
	T..0002	1.022.211.00		Driver Transformer, 150kHz	St
(01)	TP.0001	54.02.0320		Test-Pin Lupot-Nr. E184 / BLE	

IND.	POS.NO.	PART NO.	VALUE	SPECIFICATIONS / EQUIVALENT	MANUF.

(01) 83/06/21 Use of standard potentiometer. Testpoint added (TP 1).
(02) 83/09/05 Contraction of bandwidth of clockreleasing circuit.

Note 1 - Potentiometer: Bourns-Nr. 3386 X-1-203
VAN-Nr. T80- 4DX 20k
Spectrol-Nr. 63 X 203 F010

Ce=Ceramic, El=Electrolytic, PP=Polypropylene, Sal=Solid aluminum

Manufacturer: ADI=Analog Devices Inc., Fc=Fairchild, ITT=Intermetall,
Mom=Mamothek, Mot=Motorola, MpS=Micropower Semicond.
NEC=Nippon Electric Corp., NS=National Semiconductors,
Ph=Philips, Ses=Sescosem, SGS=SGS-Ates, Sie=Siemens,
Sig=Signetics, St=Studer, Sx=Siliconix,
TS=Teledyne Semiconductors, Tf=Telefunken,
TI=Texas Instruments.

DRIG 82/08/05 (01) 83/06/21 (02) 83/09/05

MONO/STEREO SWITCH PCB 1.820.720–00 GR20 EL12 "ESE"
FRONT PANEL PCB (LAYOUT 1.820.739–11)

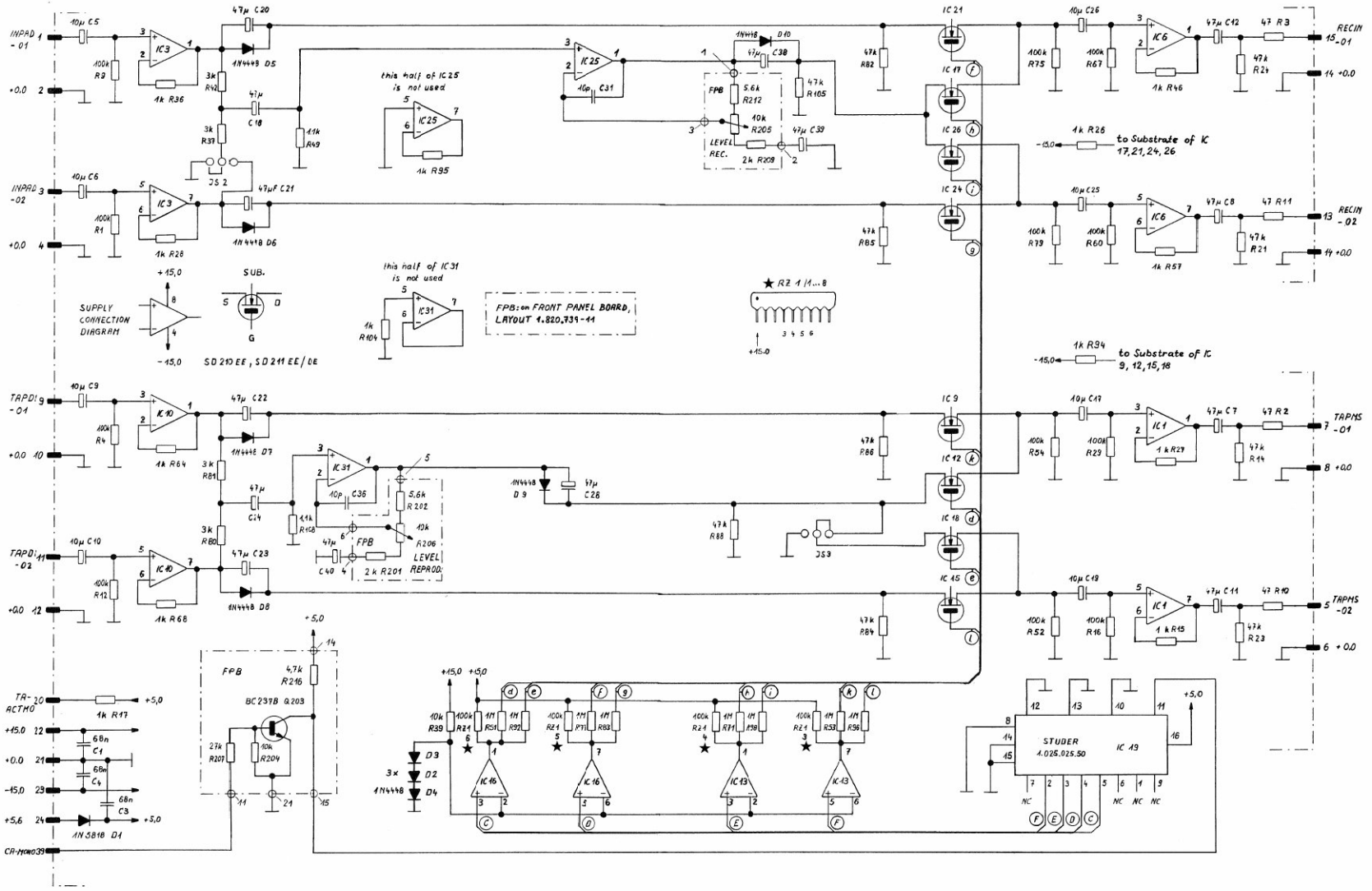

★ HAS BEEN MODIFIED

MONO/STEREO SWITCH PCB 1.820.720–00 GR20 EL12 "ESE"
FRONT PANEL PCB (LAYOUT 1.820.739–11)

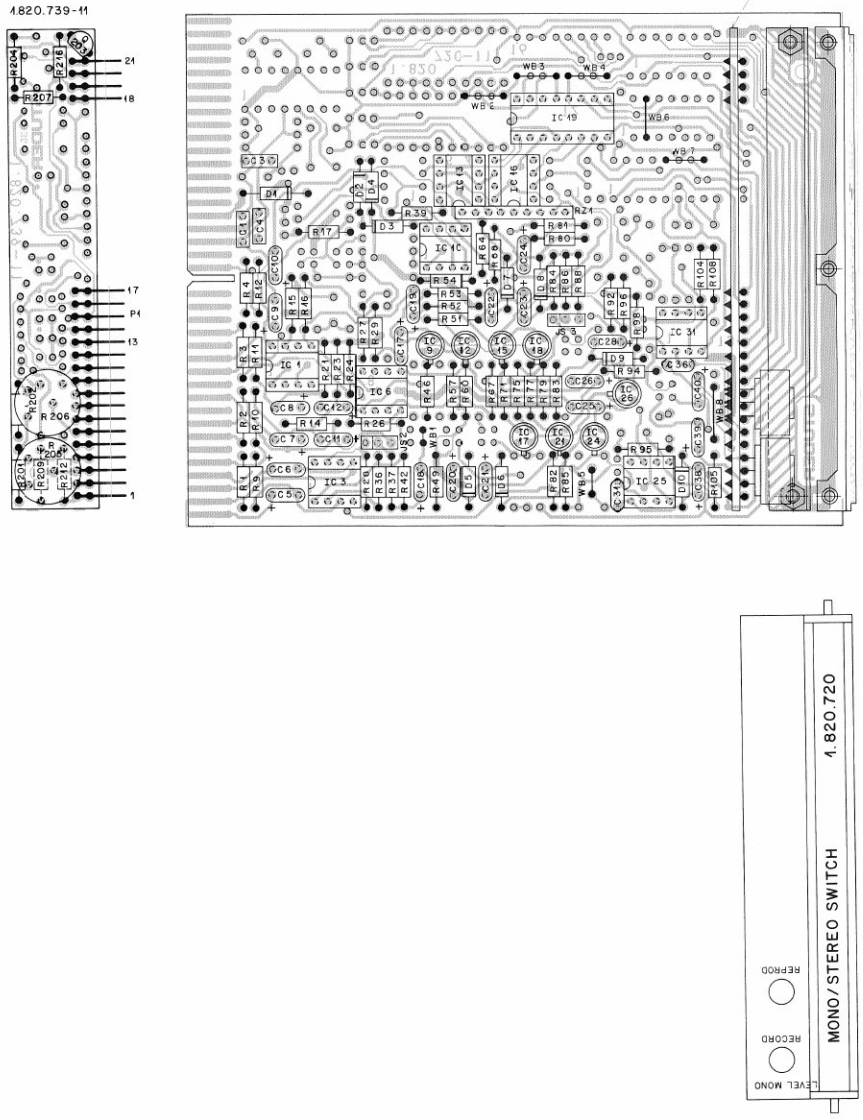

IND.	POS.NO.	PART NO.	VALUE	SPECIFICATIONS / EQUIVALENT	MANUF.
	C..0001	59.99.8205	68 nF	-20%, 63V, Ce	
	C..0003	59.99.8205	68 nF	-20%, 63V, Ce	
	C..0004	59.99.8205	68 nF	-20%, 63V, Ce	
	C..0005	59.26.2100	10 uF	-20%, 16V, Sal	
	C..0006	59.26.2100	10 uF	-20%, 16V, Sal	
	C..0007	59.26.8470	47 uF	-20%, 6.3V, Sal	
	C..0008	59.26.8470	47 uF	-20%, 6.3V, Sal	
	C..0009	59.26.2100	10 uF	-20%, 16V, Sal	
	C..0010	59.26.2100	10 uF	-20%, 16V, Sal	
	C..0011	59.26.8470	47 uF	-20%, 6.3V, Sal	
	C..0012	59.26.8470	47 uF	-20%, 6.3V, Sal	
	C..0017	59.26.2100	10 uF	-20%, 16V, Sal	
	C..0018	59.26.8470	47 uF	-20%, 6.3V, Sal	
	C..0019	59.26.2100	10 uF	-20%, 16V, Sal	
	C..0020	59.26.8470	47 uF	-20%, 6.3V, Sal	
	C..0021	59.26.8470	47 uF	-20%, 6.3V, Sal	
	C..0022	59.26.8470	47 uF	-20%, 6.3V, Sal	
	C..0023	59.26.8470	47 uF	-20%, 6.3V, Sal	
	C..0024	59.26.8470	47 uF	-20%, 6.3V, Sal	
	C..0025	59.26.2100	10 uF	-20%, 16V, Sal	
	C..0026	59.26.2100	10 uF	-20%, 16V, Sal	
	C..0028	59.26.8470	47 uF	-20%, 6.3V, Sal	
	C..0031	59.34.1100	10 pF	5%, Ce	
	C..0036	59.34.1100	10 pF	5%, Ce	
	C..0038	59.26.8470	47 uF	-20%, 6.3V, Sal	
	C..0039	59.26.8470	47 uF	-20%, 6.3V, Sal	
	C..0040	59.26.8470	47 uF	-20%, 6.3V, Sal	
	D..0001	50.04.8512	1N5818	1N5819	Mot
	D..0002	50.04.8125	1N4448		ITT,Ph,Ses
	D..0003	50.04.8125	1N4448		ITT,Ph,Ses
	D..0004	50.04.8125	1N4448		ITT,Ph,Ses
	D..0005	50.04.8125	1N4448		ITT,Ph,Ses
	D..0006	50.04.8125	1N4448		ITT,Ph,Ses
	D..0007	50.04.8125	1N4448		ITT,Ph,Ses
	D..0008	50.04.8125	1N4448		ITT,Ph,Ses
	D..0009	50.04.8125	1N4448		ITT,Ph,Ses

S T U D E R 83/03/22 BRT M-S SWITCH 1.820.720.00 PAGE 1

IND.	POS.NO.	PART NO.	VALUE	SPECIFICATIONS / EQUIVALENT	MANUF.
	D..0010	50.04.8125	1N4448		ITT,Ph,Ses
	IC.0001	50.09.8105	NE5532N	RC5532N	Sig,Fx,Ra
	IC.0003	50.09.8105	NE5532N	RC5532N	Sig,Fx,Ra
	IC.0006	50.09.8105	NE5532N	RC5532N	Sig,Fx,Ra
	IC.0009	50.11.8106	SG211-EL	SG2.1-UE	Sig,Sx
	IC.0010	50.09.8105	NE5532N	RC5532N	Sig,Fx,Ra
	IC.0012	50.11.8106	SG211-EL	SG2.1-UE	Sig,Sx
	IC.0013	50.09.8203	LM393	LM393	TI,TI
	IC.0015	50.11.8106	SG211-EL	SG2.1-UE	Sig,Sx
	IC.0016	50.09.8203	LM393N	LM393	TI,TI
	IC.0017	50.11.8106	SG211-EL	SG2.1-UE	Sig,Sx
	IC.0018	50.11.8106	SG211-EL	SG2.1-UE	Sig,Sx
	IC.0019	1.825.021.50		PROM A810 A/S Switch	St
	IC.0021	50.11.8106	SG211-EL	SG2.1-UE	Sig,Sx
	IC.0024	50.11.8106	SG211-EL	SG2.1-UE	Sig,Sx
	IC.0025	50.09.8105	NE5532N	RC5532N	Sig,Fx,Ra
	IC.0026	50.11.8106	SG211-EL	SG2.1-UE	Sig,Sx
	IC.0031	50.09.8105	NE5532N	RC5532N	Sig,Fx,Ra
	JS.0002			See Note 1	
	JS.0003			See Note 1	
	Q..0203	50.03.8436	BC238B	BC547B, BC550B	ITT,Mot,Ph,Sie,Tf
	R..0001	57.11.4104	100 kOhm	5%	
	R..0002	57.11.4470	47 Ohm	5%	
	R..0003	57.11.4470	47 Ohm	5%	
	R..0004	57.11.4104	100 kOhm	5%	
	R..0009	57.11.4104	100 kOhm	5%	
	R..0010	57.11.4470	47 Ohm	5%	
	R..0011	57.11.4470	47 Ohm	5%	
	R..0012	57.11.4104	100 kOhm	5%	
	R..0014	57.11.4473	47 kOhm	5%	
	R..0015	57.11.4102	1 kOhm	5%	
	R..0016	57.11.4104	100 kOhm	5%	
	R..0017	57.11.4102	1 kOhm	5%	

S T U D E R 83/03/22 BRT M-S SWITCH 1.820.720.00 PAGE 2

IND.	POS.NO.	PART NO.	VALUE	SPECIFICATIONS / EQUIVALENT	MANUF.
	R..0021	57.11.4473	47 kOhm	5%	
	R..0023	57.11.4473	47 kOhm	5%	
	R..0024	57.11.4473	47 kOhm	5%	
	R..0026	57.11.4102	1 kOhm	5%	
	R..0027	57.11.4102	1 kOhm	5%	
	R..0028	57.11.4102	1 kOhm	5%	
	R..0029	57.11.4104	100 kOhm	5%	
	R..0036	57.11.4102	1 kOhm	5%	
	R..0037	57.11.3302	3.0 kOhm	1%	
	R..0039	57.11.4103	10 kOhm	5%	
	R..0042	57.11.3302	3.0 kOhm	1%	
	R..0046	57.11.4102	1 kOhm	5%	
	R..0049	57.11.3112	1.1 kOhm	1%	
	R..0051	57.11.4105	1 MOhm	5%	
	R..0052	57.11.4104	100 kOhm	5%	
	R..0053	57.11.4105	1 MOhm	5%	
	R..0054	57.11.4104	100 kOhm	5%	
	R..0057	57.11.4102	1 kOhm	5%	
	R..0060	57.11.4104	100 kOhm	5%	
	R..0064	57.11.4102	1 kOhm	5%	
	R..0067	57.11.4104	100 kOhm	5%	
	R..0068	57.11.4102	1 kOhm	5%	
	R..0071	57.11.4105	1 MOhm	5%	
	R..0075	57.11.4104	100 kOhm	5%	
	R..0077	57.11.4105	1 MOhm	5%	
	R..0079	57.11.4104	100 kOhm	5%	
	R..0080	57.11.3302	3.0 kOhm	1%	
	R..0081	57.11.3302	3.0 kOhm	1%	
	R..0082	57.11.4473	47 kOhm	5%	
	R..0083	57.11.4105	1 MOhm	5%	
	R..0084	57.11.4473	47 kOhm	5%	
	R..0085	57.11.4473	47 kOhm	5%	
	R..0086	57.11.4473	47 kOhm	5%	
	R..0088	57.11.4473	47 kOhm	5%	
	R..0092	57.11.4105	1 MOhm	5%	
	R..0094	57.11.4102	1 kOhm	5%	
	R..0095	57.11.4102	1 kOhm	5%	

S T U D E R 83/03/22 BRT M-S SWITCH 1.820.720.00 PAGE 3

IND.	POS.NO.	PART NO.	VALUE	SPECIFICATIONS / EQUIVALENT	MANUF.
	R..0096	57.11.4105	1 MOhm	5%	
	R..0098	57.11.4105	1 MOhm	5%	
	R..0104	57.11.4102	1 kOhm	5%	
	R..0105	57.11.4473	47 kOhm	5%	
	R..0108	57.11.3112	1.1 kOhm	1%	
	R..0201	57.11.3702	2 kOhm	1%	
	R..0202	57.11.4562	5.6 kOhm	2%	
	R..0204	57.11.4103	10 kOhm	5%	
	R..0205	58.01.5103	10 kOhm	See Note 2	
	R..0206	58.01.5103	10 kOhm	See Note 2	
	R..0207	57.11.4273	27 kOhm	2%	
	R..0209	57.11.3202	2 kOhm	1%	
	R..0212	57.11.4562	5.6 kOhm	2%	
	R..0216	57.11.4472	4.7 kOhm	5%	
(00)	RZ.0001	57.88.4103	10k kOhm	See Note 3	
(01)	RZ.0001	57.88.4104	100 kOhm	See Note 3	

S T U D E R 83/03/22 BRT M-S SWITCH 1.820.720.00 PAGE 4

(01) 83.03.22 Part Nr. of RZ 1 has been changed.

Following components are not used:

C 0002, 0013, 0014, 0015, 0016, 0027, 0029, 0030, 0032, 0033, 0034, 0035, 0037, 0041, 0201, 0207.

D 0201.

DL 0201, 0202, 0203, 0204, 0205, 0206.

IC 0002, 0004, 0005, 0007, 0008, 0011, 0014, 0020, 0022, 0023, 0027, 0028, 0029, 0030.

JS 0001

Q 0001, 0002, 0003, 0004, 0005, 0201, 0202.

R 0005, 0006, 0007, 0008, 0013, 0018, 0019, 0020, 0022, 0025, 0030, 0031, 0032, 0033, 0034, 0035, 0038, 0040, 0041, 0043, 0044, 0045, 0047, 0048, 0050, 0054, 0056, 0058, 0059, 0061, 0062, 0063, 0065, 0066, 0069, 0070, 0072, 0073, 0074, 0076, 0078, 0079, 0080, 0087, 0089, 0090, 0091, 0093, 0097, 0099, 0100, 0101, 0102, 0103, 0104, 0107, 0109, 0200, 0208, 0210, 0211, 0213, 0214, 0215, 0217, 0218, 0219, 0220.

S 0201, 0202.

Note 1 – Contact pin: Studer 54.01.0020, Berg 75 160-102-36
Bridge: Studer 54.01.0021, Philips 2422 024 08003

Note 2 – 10 kOhm Potentiometer lin., 20%
Allen Bradley Nr. PR 103 M

Note 3 – 8 x 100 kOhm Network, 5%
Elektrohm Nr. C 09 x 100 KJ

S T U D E R 83/03/22 BRT M-S SWITCH 1.820.720.00 PAGE 5

Inoltro Nr. R 88 103k 5%

Ce=Ceramic, El=Electrolytic, Sal=Solid aluminium, PP=Polypropylen, PETP=Polyesterfilm

MANUFACTURER: Ex=Exar, ITT=Intermetall, Mot=Motorola,
Ns=National Semiconductor, Ph=Philips, Ra=Raytheon,
Ses=Sescosem, Sie=Siemens, Sig=Signetics, St=Studer,
Sx=Siliconix, Tf=Telefunken, TI=Texas Instruments.

DRIG 82/08/17 (01) 83/03/22

S T U D E R 83/03/22 BRT M-S SWITCH 1.820.720.00 PAGE 6

COMPONENT NUMBERS 200 AND UP LOCATED ON FRONT PANEL PCB (LAYOUT 1.820.739–11)

MONO/STEREO SWITCH PCB WITH TEST GENERATOR 1.820.724–00 GR20 EL12 "ESE"
FRONT PANEL PCB (LAYOUT 1.820.739–11)

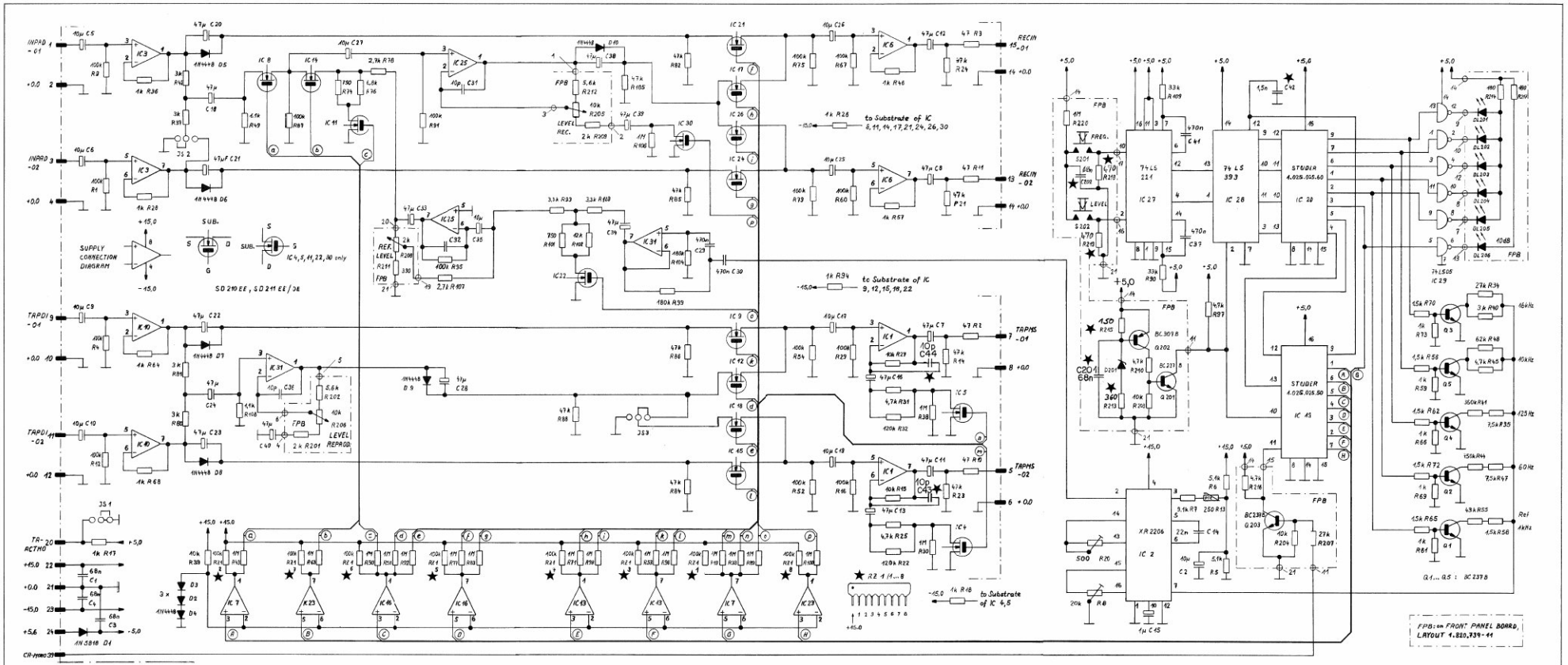

IND.	POS.NO.	PART NO.	VALUE	SPECIFICATIONS / EQUIVALENT	MANUF.
	C..0001	59.99.0225	68 nF	-20%, 63V, Co	
	C..0002	59.26.2130	10 uF	-20%, 16V, Sal	
	C..0003	59.99.0225	68 nF	-20%, 63V, Co	
	C..0004	59.99.0225	68 nF	-20%, 63V, Co	
	C..0005	59.26.2130	10 uF	-20%, 16V, Sal	
	C..0006	59.26.2130	10 uF	-20%, 16V, Sal	
	C..0007	59.26.0470	47 uF	-20%, 6.3V, Sal	
	C..0008	59.26.0470	47 uF	-20%, 6.3V, Sal	
	C..0009	59.26.2130	10 uF	-20%, 16V, Sal	
	C..0010	59.26.2130	10 uF	-20%, 16V, Sal	
	C..0011	59.26.0470	47 uF	-20%, 6.3V, Sal	
	C..0012	59.26.0470	47 uF	-20%, 6.3V, Sal	
	C..0013	59.26.0470	47 uF	-20%, 6.3V, Sal	
	C..0014	59.05.1223	22 nF	1%, 63V, PP	
	C..0015	59.26.9139	1 uF	-20%, 40V, Sal	
	C..0016	59.26.0470	47 uF	-20%, 6.3V, Sal	
	C..0017	59.26.2130	10 uF	-20%, 16V, Sal	
	C..0018	59.26.0470	47 uF	-20%, 6.3V, Sal	
	C..0019	59.26.2130	10 uF	-20%, 16V, Sal	
	C..0020	59.26.0470	47 uF	-20%, 6.3V, Sal	
	C..0021	59.26.0470	47 uF	-20%, 6.3V, Sal	
	C..0022	59.26.0470	47 uF	-20%, 6.3V, Sal	
	C..0023	59.26.0470	47 uF	-20%, 6.3V, Sal	
	C..0024	59.26.0470	47 uF	-20%, 6.3V, Sal	
	C..0025	59.26.2130	10 uF	-20%, 16V, Sal	
	C..0026	59.26.2130	10 uF	-20%, 16V, Sal	
	C..0027	59.26.2130	10 uF	-20%, 16V, Sal	
	C..0028	59.26.0470	47 uF	-20%, 6.3V, Sal	
	C..0029	59.06.5474	0.47 uF	5%, 63V, PETP	
	C..0030	59.06.5474	0.47 uF	5%, 63V, PETP	
	C..0031	59.34.1130	10 pF	5%, Co	
	C..0032		not used		
	C..0033	59.26.0470	47 uF	-20%, 6.3V, Sal	
	C..0034	59.26.0470	47 uF	-20%, 6.3V, Sal	
	C..0035	59.26.2130	10 uF	-20%, 16V, Sal	
	C..0036	59.34.1130	10 pF	5%, Co	
	C..0037	59.06.5474	0.47 uF	5%, 63V, PETP	

IND.	POS.NO.	PART NO.	VALUE	SPECIFICATIONS / EQUIVALENT	MANUF.
	C..0038	59.26.0470	47 uF	-20%, 6.3V, Sal	
	C..0039	59.26.0470	47 uF	-20%, 6.3V, Sal	
	C..0040	59.26.0470	47 uF	-20%, 6.3V, Sal	
	C..0041	59.06.5474	0.47 uF	5%, 63V, PETP	
(01)	C..0042	59.32.4152	1.5 nF	20%, 63V, Ce	
(02)	C..0043	59.99.0603	10 pF	5%, Co	
(02)	C..0044	59.99.0603	10 pF	5%, Co	
(00)	C..0221	59.06.0104	0.1 uF	10%, 63V, PETP	
(01)	C..0221	59.06.0683	68 nF	10%, 63V, PETP	
(00)	C..0222	59.06.0104	0.1 uF	10%, 63V, PETP	
(01)	C..0222	59.06.0683	68 nF	10%, 63V, PETP	
	D..0001	50.04.0512	1N5818	1N5819	Mot
	D..0002	50.04.0125	1N4448		ITT+PhySes
	D..0003	50.04.0125	1N4448		ITT+PhySes
	D..0004	50.04.0125	1N4448		ITT+PhySes
	D..0005	50.04.0125	1N4448		ITT+PhySes
	D..0006	50.04.0125	1N4448		ITT+PhySes
	D..0007	50.04.0125	1N4448		ITT+PhySes
	D..0008	50.04.0125	1N4448		ITT+PhySes
	D..0009	50.04.0125	1N4448		ITT+PhySes
	D..0010	50.04.0125	1N4448		ITT+PhySes
	D..0231	50.04.1106	2.7 V Z	ZPD 2.7	ITT
	DL.0231	50.04.2130	CQV 13-5	Q 62703-Q 575	Sie
	DL.0232	50.04.2130	CQV 13-5	Q 62703-Q 575	Sie
	DL.0233	50.04.2130	CQV 13-5	Q 62703-Q 575	Sie
	DL.0234	50.04.2130	CQV 13-5	Q 62703-Q 575	Sie
	DL.0235	50.04.2130	CQV 13-5	Q 62703-Q 575	Sie
	DL.0236	50.04.2130	CQV 13-5	Q 62703-Q 575	Sie
	IC.0001	50.09.0105	NE5532N	XR5532N	Sig+ExxRa
	IC.0002	50.11.0108	MRZ1060P	SG2206P	Exx565
	IC.0003	50.09.0105	NE5532N	XR5532N	Sig+ExxRa
	IC.0004	50.11.0106	SD 214 DE	BSD 214	PhySix
	IC.0005	50.11.0106	SD 214 DE	BSD 214	PhySix
	IC.0006	50.09.0105	NE5532N	XR5532N	Sig+ExxRa

IND.	POS.NO.	PART NO.	VALUE	SPECIFICATIONS / EQUIVALENT	MANUF.
	IC.0007	50.05.0283	LM393N	LM393	NS+TI
	IC.0008	50.11.0106	SD 214 DE	BSD 214	PhySix
	IC.0009	50.11.0106	SD 214 DE	BSD 214	PhySix
	IC.0010	50.09.0105	NE5532N	XR5532N	Sig+ExxRa
	IC.0011	50.11.0106	SD 214 DE	BSD 214	PhySix
	IC.0012	50.11.0106	SD 214 DE	BSD 214	PhySix
	IC.0013	50.05.0283	LM393N	LM393	NS+TI
	IC.0014	50.11.0106	SD 214 DE	BSD 214	PhySix
	IC.0015	50.11.0106	SD 214 DE	BSD 214	PhySix
	IC.0016	50.05.0283	LM393N	LM393	NS+TI
	IC.0017	50.11.0106	SD 214 DE	BSD 214	PhySix
	IC.0018	50.11.0106	SD 214 DE	BSD 214	PhySix
	IC.0019	1.025.025.50		PROM A810 M/S Switch	St
	IC.0020	1.025.025.60		PROM A810 M/S Switch + Test Generator	St
	IC.0021	50.11.0106	SD 214 DE	BSD 214	PhySix
	IC.0022	50.11.0106	SD 214 DE	BSD 214	PhySix
	IC.0023	50.05.0283	LM393N	LM393	NS+TI
	IC.0024	50.11.0106	SD 214 DE	BSD 214	PhySix
	IC.0025	50.09.0105	NE5532N	XR5532N	Sig+ExxRa
	IC.0026	50.11.0106	SD 214 DE	BSD 214	PhySix
	IC.0027	50.06.0221	SN74LS221N		TI
	IC.0028	50.06.0393	SN74LS393N		TI
	IC.0029	50.06.0905	SN74LS05N		TI
	IC.0030	50.11.0106	SD 214 DE	BSD 214	PhySix
	IC.0031	50.09.0105	NE5532N	XR5532N	Sig+ExxRa
	JS.0001			See note 1	
	JS.0002			See note 1	
	JS.0003			See note 1	
	Q..0001	50.03.0436	BC237B	BC547B, BC550B	ITT+Mot+PhySie+TF
	Q..0002	50.03.0436	BC237B	BC547B, BC550B	ITT+Mot+PhySie+TF
	Q..0003	50.03.0436	BC237B	BC547B, BC550B	ITT+Mot+PhySie+TF
	Q..0004	50.03.0436	BC237B	BC547B, BC550B	ITT+Mot+PhySie+TF
	Q..0005	50.03.0436	BC237B	BC547B, BC550B	ITT+Mot+PhySie+TF
	Q..0201	50.03.0436	BC237B	BC547B, BC550B	ITT+Mot+PhySie+TF
	Q..0202	50.03.0519	BC301B	BC557B, BC560B, BC251B	ITT+Mot+PhySie+TF

IND.	POS.NO.	PART NO.	VALUE	SPECIFICATIONS / EQUIVALENT	MANUF.
	Q..0203	50.03.0436	BC237B	BC547B, BC550B	ITT+Mot+PhySie+TF
	R..0001	57.11.4104	100 kOhm	5%	
	R..0002	57.11.4470	47 Ohm	5%	
	R..0003	57.11.4470	47 Ohm	5%	
	R..0004	57.11.4104	100 kOhm	5%	
	R..0005	57.11.3512	5.1 kOhm	1%	
	R..0006	57.11.3512	5.1 kOhm	1%	
	R..0007	57.11.3911	9.1 kOhm	1%	
	R..0008	58.01.7503	90 kOhm	See note 2	
	R..0009	57.11.4104	100 kOhm	5%	
	R..0010	57.11.4470	47 Ohm	5%	
	R..0011	57.11.4470	47 Ohm	5%	
	R..0012	57.11.4104	100 kOhm	5%	
	R..0013	57.99.0216	250 Ohm	PTC Resistor, Philips Nr. 2322 660 91001	
	R..0014	57.11.4473	47 kOhm	5%	
	R..0015	57.11.3803	10 kOhm	1%	
	R..0016	57.11.4104	100 kOhm	5%	
	R..0017	57.11.4102	1 kOhm	5%	
	R..0018	57.11.4102	1 kOhm	5%	
	R..0019	57.11.4102	1 kOhm	5%	
	R..0020	58.01.9501	500 Ohm	See note 3	
	R..0021	57.11.4473	47 kOhm	5%	
	R..0022	57.11.4124	120 kOhm	5%	
	R..0023	57.11.4473	47 kOhm	5%	
	R..0024	57.11.4473	47 kOhm	5%	
	R..0025	57.11.3472	4.7 kOhm	1%	
	R..0026	57.11.4102	1 kOhm	5%	
	R..0027	57.11.3103	10 kOhm	1%	
	R..0028	57.11.4102	1 kOhm	5%	
	R..0029	57.11.4104	100 kOhm	5%	
	R..0030	57.11.4105	1 MOhm	2%	
	R..0031	57.11.3472	4.7 kOhm	1%	
	R..0032	57.11.4124	120 kOhm	5%	
	R..0033	57.11.4105	1 MOhm	2%	
	R..0034	57.11.4273	27 kOhm	2%	
	R..0035	57.11.3752	7.5 kOhm	1%	

★HAS BEEN MODIFIED

CONTINUED ON NEXT PAGE

MONO/STEREO SWITCH PCB WITH TEST GENERATOR 1.820.724–00 GR20 EL12 "ESE"
FRONT PANEL PCB (LAYOUT 1.820.739–11)

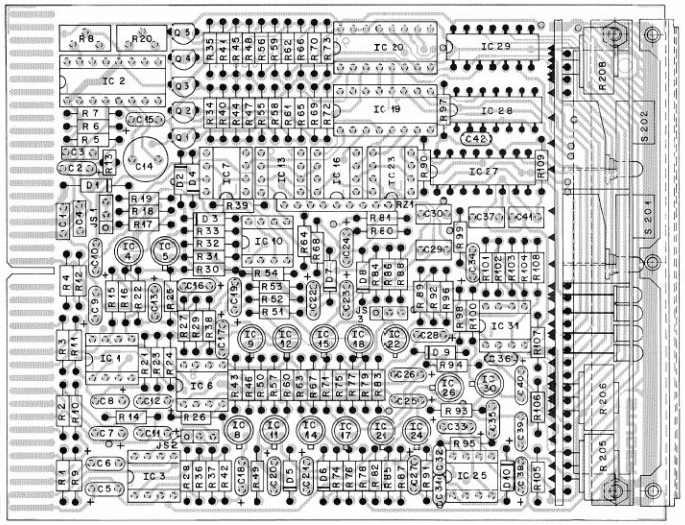

LAYOUT 1.820.720–11

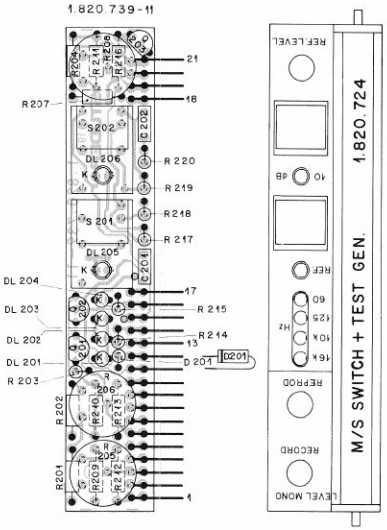

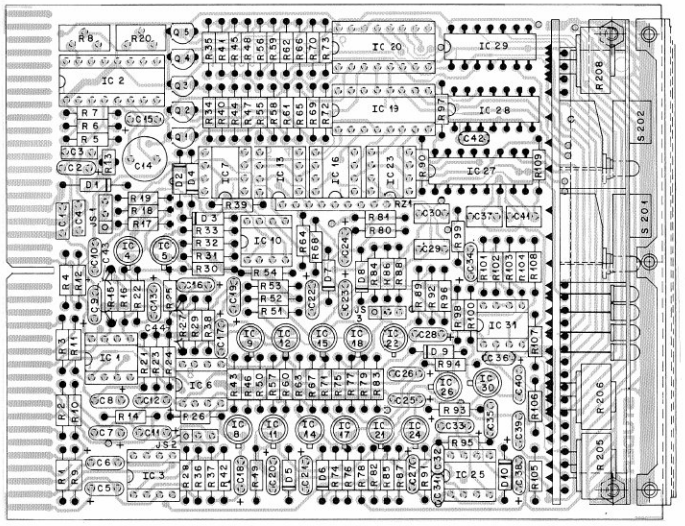

LAYOUT 1.820.720.12

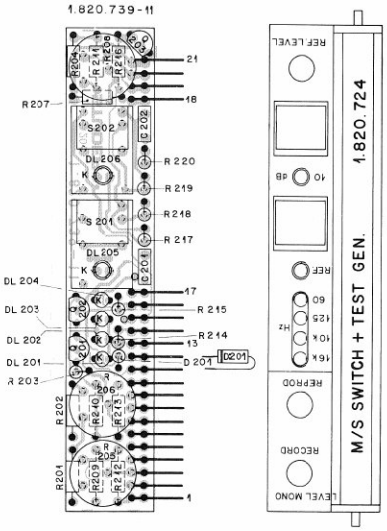

(CONTINUED)

IND.	POS.NO.	PART NO.	VALUE	SPECIFICATIONS / EQUIVALENT	MANUF.
	R.0036	57.11.4102	1 kOhm	5%	
	R.0037	57.11.3302	3.0 kOhm	1%	
	R.0038	57.11.4105	1 MOhm	2%	
	R.0039	57.11.4103	10 kOhm	5%	
	R.0040	57.11.3302	3.0 kOhm	1%	
	R.0041	57.11.3364	360 kOhm	1%	
	R.0042	57.11.3302	3.0 kOhm	1%	
	R.0043	57.11.4105	1 MOhm	2%	
	R.0044	57.11.3754	750 kOhm	1%	
	R.0045	57.11.3472	4.7 kOhm	1%	
	R.0046	57.11.4102	1 kOhm	5%	
	R.0047	57.11.3752	7.5 kOhm	1%	
	R.0048	57.11.3623	62 kOhm	2%	
	R.0049	57.11.3112	1.1 kOhm	1%	
	R.0050	57.11.4105	1 MOhm	2%	
	R.0051	57.11.4105	1 MOhm	2%	
	R.0052	57.11.4104	100 kOhm	5%	
	R.0053	57.11.4105	1 MOhm	2%	
	R.0054	57.11.4104	100 kOhm	5%	
	R.0055	57.11.3433	43 kOhm	1%	
	R.0056	57.11.4152	1.5 kOhm	2%	
	R.0057	57.11.4102	1 kOhm	5%	
	R.0058	57.11.4152	1.5 kOhm	2%	
	R.0059	57.11.4102	1 kOhm	5%	
	R.0060	57.11.4104	100 kOhm	5%	
	R.0061	57.11.4102	1 kOhm	5%	
	R.0062	57.11.4152	1.5 kOhm	2%	
	R.0063	57.11.4105	1 MOhm	2%	
	R.0064	57.11.4102	1 kOhm	5%	
	R.0065	57.11.4152	1.5 kOhm	2%	
	R.0066	57.11.4102	1 kOhm	5%	
	R.0067	57.11.4104	100 kOhm	5%	
	R.0068	57.11.4102	1 kOhm	5%	
	R.0069	57.11.4102	1 kOhm	5%	
	R.0070	57.11.4152	1.5 kOhm	2%	
	R.0071	57.11.4105	1 MOhm	2%	
	R.0072	57.11.4152	1.5 kOhm	2%	
	R.0073	57.11.4102	1 kOhm	5%	
	R.0074	57.11.3751	750 Ohm	1%	
	R.0075	57.11.4104	100 kOhm	5%	
	R.0076	57.11.4682	6.8 kOhm	5%	
	R.0077	57.11.4105	1 MOhm	2%	
	R.0078	57.11.4272	2.7 kOhm	2%	
	R.0079	57.11.4104	100 kOhm	5%	
	R.0080	57.11.3302	3.0 kOhm	1%	
	R.0081	57.11.3302	3.0 kOhm	1%	
	R.0082	57.11.4473	47 kOhm	5%	
	R.0083	57.11.4105	1 MOhm	2%	
	R.0084	57.11.4473	47 kOhm	5%	
	R.0085	57.11.4473	47 kOhm	5%	
	R.0086	57.11.4473	47 kOhm	5%	
	R.0087	57.11.4104	100 kOhm	5%	
	R.0088	57.11.4473	47 kOhm	5%	
	R.0089	57.11.4105	1 MOhm	2%	
	R.0090	57.11.4333	33 kOhm	2%	
	R.0091	57.11.4104	100 kOhm	5%	
	R.0092	57.11.4105	1 MOhm	2%	
	R.0093	57.11.3332	3.3 kOhm	1%	
	R.0094	57.11.4102	1 kOhm	5%	
	R.0095	57.11.4104	100 kOhm	5%	
	R.0096	57.11.4105	1 MOhm	2%	
	R.0097	57.11.4472	4.7 kOhm	5%	
	R.0098	57.11.4105	1 MOhm	2%	
	R.0099	57.11.4184	180 kOhm	2%	
	R.0100	57.11.4105	1 MOhm	2%	
	R.0101	57.11.3751	750 Ohm	1%	
	R.0102	57.11.4123	12 kOhm	2%	
	R.0103	57.11.3332	3.3 kOhm	1%	
	R.0104	57.11.4184	180 kOhm	2%	
	R.0105	57.11.4473	47 kOhm	5%	
	R.0106	57.11.4105	1 MOhm	2%	
	R.0107	57.11.4272	2.7 kOhm	2%	
	R.0108	57.11.3112	1.1 kOhm	1%	
	R.0109	57.11.4333	33 kOhm	2%	
	R.0201	57.11.3202	2 kOhm	1%	
	R.0202	57.11.4562	5.6 kOhm	2%	
	R.0203	57.11.4103	10 kOhm	5%	
	R.0204	57.11.4103	10 kOhm	5%	
	R.0205	58.01.5103	10 kOhm	See note 4	
	R.0206	58.01.5103	10 kOhm	See note 4	
	R.0207	57.11.4273	27 kOhm	2%	
	R.0208	58.01.5202	2 kOhm	See note 5	
	R.0209	57.11.3202	2 kOhm	1%	
	R.0210	57.11.4472	4.7 kOhm	5%	
	R.0211	57.11.4391	390 Ohm	2%	
	R.0212	57.11.4562	5.6 kOhm	2%	
(03)	R.0213	57.11.4562	5.6 kOhm	2%	
(03)	R.0213	57.11.3361	360 Ohm	2%	
	R.0214	57.11.4181	180 Ohm	5%	
(00)	R.0215	57.11.4222	2.2 kOhm	2%	
(03)	R.0215	57.11.4151	150 Ohm	2%	
	R.0216	57.11.4472	4.7 kOhm	5%	
	R.0217	57.11.4181	180 Ohm	5%	
(00)	R.0218	57.11.4101	100 Ohm	5%	
(01)	R.0218	57.11.4471	470 Ohm	5%	
(00)	R.0219	57.11.4101	100 Ohm	5%	
(01)	R.0219	57.11.4471	470 Ohm	5%	
	R.0220	57.11.4105	1 MOhm	2%	
(00)	RZ.0001	57.88.4103	100 kOhm	See note 6	
(01)	RZ.0001	57.88.4104	100 kOhm	See note 6	
	S.0201	55.15.0501	Switch	See note 7	
	S.0202	55.15.0501	Switch	See note 7	

(01: 83.03.22 Improved stability of the oneshot against switches's bounce.
C 42 added. C 201, C 202, R 218, R 219 changed.
Part Nr. of RZ 1 has been changed.
(02: 84.01.16 Improved stability of the 10db stage against ringing.
C 43 and C44 added.
(03: 85.05.28 Improved temperatur stability of power on reset circuit.

Note 1 - Contact pin: Studer 54.01.0020, Berg 75 160-102-36
Bridge: Studer 54.01.0021, Philips 2422 024 88003

Note 2 - 50 kOhm Potentiometer lin., 10%
Bourns Nr. 3386 H-1-503
Diplohm Nr. 361 50k / 525.640 10%

Note 3 - 500 Ohm Potentiometer lin., 10%
Bourns Nr. 3386 X-1-501
Spectrol Nr. 63 X 501 T010

Note 4 - 10 kOhm Potentiometer lin., 20%
Allen Bradley Nr. YR 103 M

Note 5 - 2 kOhm Potentiometer lin., 20%
Allen Bradley Nr. YR 202 M

Note 6 - 8 x 100 kOhm Network, 5%
Elektrohm Nr. C 09 x 100 KJ
Inoltro Nr. R 88 100K 5%

Note 7 - Switch Serie DIGITAST, Manufacturer Schadow/ITT
Knob SRHKL, Manufacturer Schadow/ITT, Studer Nr. 55.15.0510

Ceramic, El=Electrolytic, Sol=Solid aluminium, PP=Polypropylen, PET=Polyesterfilm

MANUFACTURER: Ex=Exar, ITT=Intermetall, Mot=Motorola,
NS=National Semiconductors, Ph=Philips, Ra=Raytheon,
Ses=Sescosem, Sie=Siemens, Sig=Signetics, St=Studer,
Six=Siliconix, Tf=Telefunken, Ti=Texas Instruments.

DATE 82/08/10 (01) 83/03/22 (02) 84/01/16 (03) 85/05/28

S T U D E R (03) 85/05/28 RBT M-S SWITCH + TESTGENERATOR 1.820.724.00 PAGE 9

COMPONENT NUMBERS 200 AND UP LOCATED ON FRONT PANEL PCB (LAYOUT 1.820.739–11)

VU PANEL 1.810.320–81 GR39/40
VU METER AMPLIFIER PCB 1.820.730–00/–81

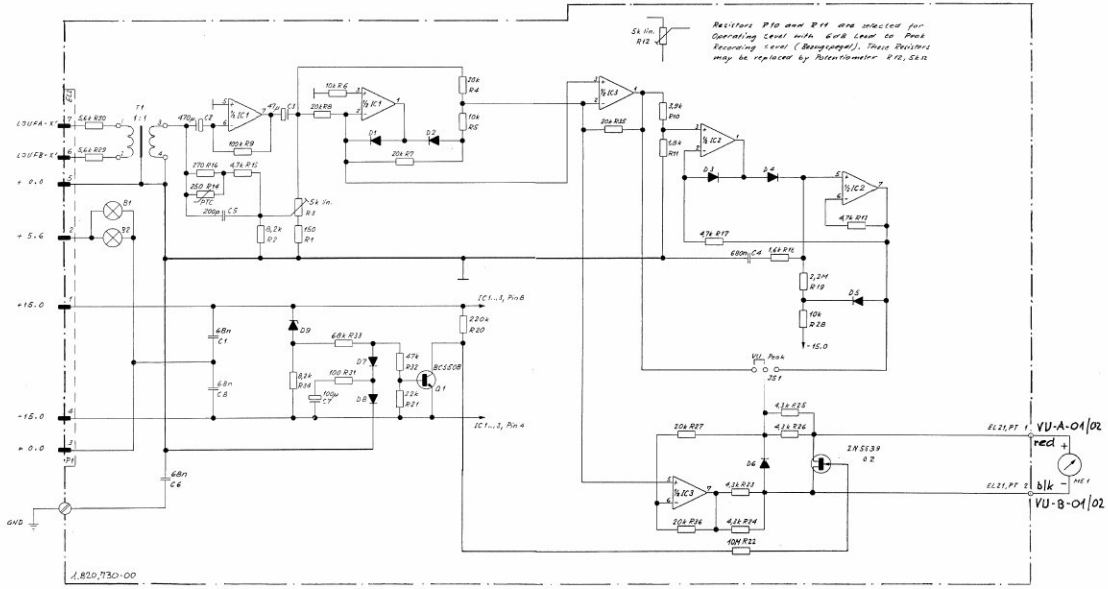

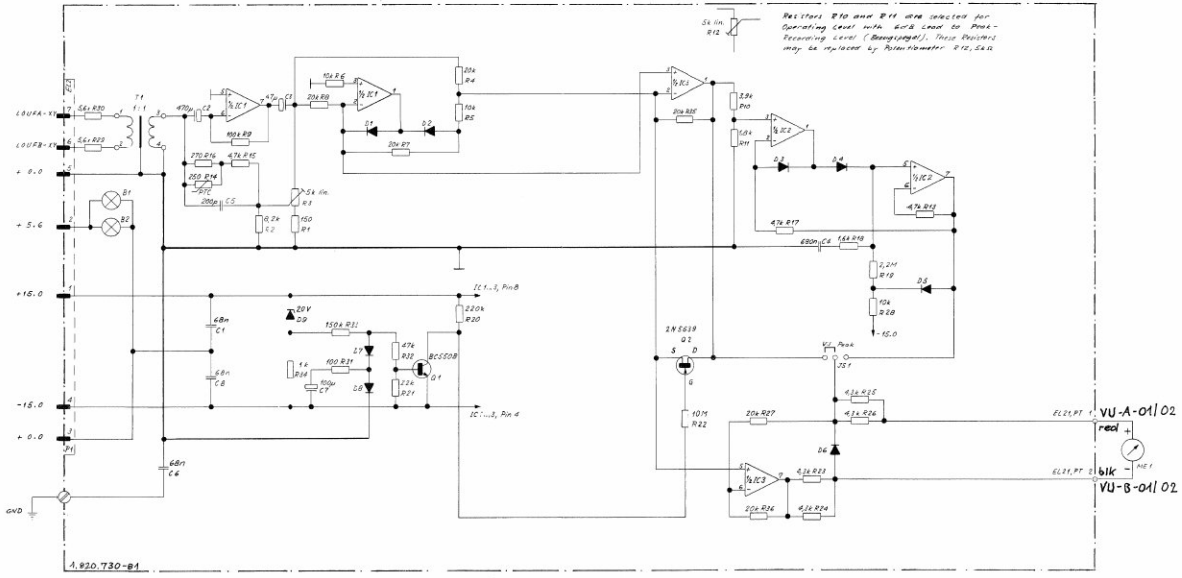

VU PANEL 1.810.320–81 GR39/40
VU METER AMPLIFIER PCB 1.820.730–00/–81

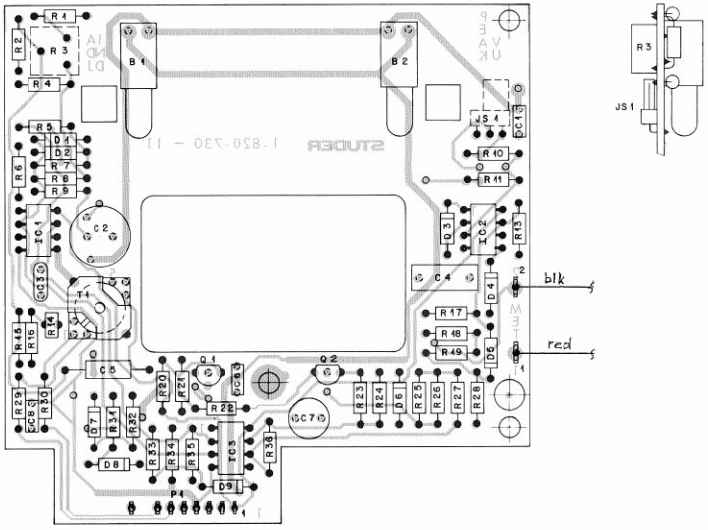

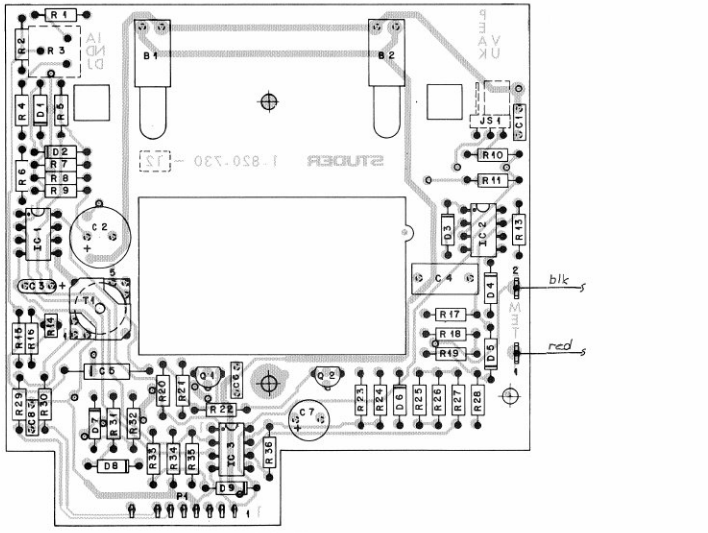

PLUGGED INTO CALIBRATION PCB 1.820.731–00

IND.	POS.NO.	PART NO.	VALUE	SPECIFICATIONS / EQUIVALENT	MANUF.
(00)	B.....1	51.02.0143	Lamp		
(01)	B.....1	51.02.0144	Lamp	See note 1	
(00)	B.....2	51.02.0143	Lamp		
(01)	B.....2	51.02.0144	Lamp	See note 1	
	C.....1	59.99.0205	68 nF	Ce	
	C.....2	59.22.2471	470 uF	6V, El	
	C.....3	59.26.0470	47 uF	6V, Sal	Ph
	C.....4	59.02.0684	680 nF	5%, 63V, MPC	
	C.....5	59.12.7201	200 pF	1%, 63V, PS	
	C.....6	59.99.0205	68 nF	Ce	
	C.....7	59.22.5101	100 uF	25V, El	
	C.....8	59.99.0205	68 nF	Ce	
	D.....1	50.04.0125	1N4448		ITT,Ph,Ses,TI
	D.....2	50.04.0125	1N4448		ITT,Ph,Ses,TI
	D.....4	50.04.0125	1N4448		ITT,Ph,Ses,TI
	D.....5	50.04.0125	1N4448		ITT,Ph,Ses,TI
	D.....6	50.04.0125	1N4448		ITT,Ph,Ses,TI
	D.....7	50.04.0125	1N4448		ITT,Ph,Ses,TI
	D.....8	50.04.0125	1N4448		ITT,Ph,Ses,TI
	D.....9	50.04.1121	24 V Z	ZPD24, BZX83C24, BZX55C24	ITT,Ses
	IC....1	50.09.0101	LF353N	TL072ACP	NS,TI
	IC....2	50.09.0101	LF353N	TL072ACP	NS,TI
	IC....3	50.09.0101	LF353N	TL072ACP	NS,TI
	JS....1			See note 2	
	ME....1	1.810.320.22		VU-Meter	St
	P.....1	54.01.0319	9 cont.	AMP Nr. 163.749-7	
	Q.....1	50.03.0436	BC237B	BC547B	ITT,Ph,Sie
	Q.....2	50.03.0331	2N5639		Mot,Sx
	R.....1	57.11.4151	150 Ohm		

S T U D E R 82/11/19 BBT VU-METER AMPLIFIER 1.820.730.00 PAGE 1

IND.	POS.NO.	PART NO.	VALUE	SPECIFICATIONS / EQUIVALENT	MANUF.
	B.....1	51.02.0144	Lamp	See note 1	
	B.....2	51.02.0144	Lamp	See note 1	
	C.....1	59.99.0205	68 nF	Ce	
	C.....2	59.22.2471	470 uF	6V, El	
	C.....3	59.26.0470	47 uF	6V, Sal	Ph
	C.....4	59.02.0684	680 nF	5%, 63V, MPC	
	C.....5	59.12.7201	200 pF	1%, 63V, PS	
	C.....6	59.99.0205	68 nF	Ce	
	C.....7	59.22.5101	100 uF	25V, El	
	C.....8	59.99.0205	68 nF	Ce	
	D.....1	50.04.0125	1N4448		ITT,Ph,Ses,TI
	D.....2	50.04.0125	1N4448		ITT,Ph,Ses,TI
	D.....4	50.04.0125	1N4448		ITT,Ph,Ses,TI
	D.....5	50.04.0125	1N4448		ITT,Ph,Ses,TI
	D.....6	50.04.0125	1N4448		ITT,Ph,Ses,TI
	D.....7	50.04.0125	1N4448		ITT,Ph,Ses,TI
	D.....8	50.04.0125	1N4448		ITT,Ph,Ses,TI
	D.....9	50.04.1109	20 V Z	ZPD20, BZX83C20, BZX55C20	ITT,Ses
	IC....1	50.09.0101	LF353N	TL072ACP	NS,TI
	IC....2	50.09.0101	LF353N	TL072ACP	NS,TI
	IC....3	50.09.0101	LF353N	TL072ACP	NS,TI
	JS....1			See note 2	
	ME....1	1.810.320.22		VU-Meter	St
	P.....1	54.01.0319	9 cont.	AMP Nr. 163.749-7	
	Q.....1	50.03.0436	BC237B	BC547B	ITT,Ph,Sie
	Q.....2	50.03.0331	2N5639		Mot,Sx
	R.....1	57.11.4151	150 Ohm		
	R.....2	57.11.4822	8.2 kOhm		
	R.....3	58.01.8502	5 kOhm	See note 3	

S T U D E R 83/02/22 BBT VU-METER AMPLIFIER 1.820.730.81 PAGE 1

IND.	POS.NO.	PART NO.	VALUE	SPECIFICATIONS / EQUIVALENT	MANUF.
	R.....2	57.11.4822	8.2 kOhm		
	R.....3	58.01.8502	5 kOhm	See note 3	
	R.....4	57.11.3203	20 kOhm	1%	
	R.....5	57.11.4103	10 kOhm		
	R.....6	57.11.4103	10 kOhm		
	R.....7	57.11.3203	20 kOhm		
	R.....8	57.11.3203	20 kOhm		
	R.....9	57.11.4104	100 kOhm		
	R....10	57.11.4392	3.9 kOhm		
	R....11	57.11.4182	1.8 kOhm		
	R....12		not used		
	R....13	57.11.4472	4.7 kOhm		
	R....14	57.99.0216	250 Ohm	PTC Resistor, Philips Nr. 2322 660 91001	
	R....15	57.11.4472	4.7 kOhm		
	R....16	57.11.4271	270 Ohm		
	R....17	57.11.4472	4.7 kOhm		
	R....18	57.11.3162	1.6 kOhm	1%	
	R....19	57.11.5225	2.2 MOhm		
	R....20	57.11.4224	220 kOhm		
	R....21	57.11.4223	22 kOhm		
	R....22	57.11.4106	10 MOhm		
	R....23	57.11.3432	4.3 kOhm	1%	
	R....24	57.11.3432	4.3 kOhm	1%	
	R....25	57.11.3432	4.3 kOhm	1%	
	R....26	57.11.3432	4.3 kOhm	1%	
	R....27	57.11.3203	20 kOhm	1%	
	R....28	57.11.4103	10 kOhm		
	R....29	57.11.4562	5.6 kOhm		
	R....30	57.11.4562	5.6 kOhm		
	R....31	57.11.4101	100 Ohm		
	R....32	57.11.4473	47 kOhm		
	R....33	57.11.4683	68 kOhm		
	R....34	57.11.4822	8.2 kOhm		
	R....35	57.11.3203	20 kOhm	1%	
	R....36	57.11.3203	20 kOhm	1%	
	T....01	1.022.218.00		Inputtransformer 1 : 1	St

S T U D E R 82/11/19 BBT VU-METER AMPLIFIER 1.820.730.00 PAGE 2

IND.	POS.NO.	PART NO.	VALUE	SPECIFICATIONS / EQUIVALENT	MANUF.
	R....6	57.11.3203	20 kOhm	1%	
	R....7	57.11.4103	10 kOhm		
	R....8	57.11.4103	10 kOhm		
	R....9	57.11.3203	20 kOhm		
	R....10	57.11.3203	20 kOhm		
	R....11	57.11.4104	100 kOhm		
	R....12	57.11.4392	3.9 kOhm		
	R....13	57.11.4182	1.8 kOhm		
	R....14		not used		
	R....15	57.11.4472	4.7 kOhm		
	R....16	57.11.4271	270 Ohm		
	R....17	57.11.4472	4.7 kOhm		
	R....18	57.11.3162	1.6 kOhm	1%	
	R....19	57.11.5225	2.2 MOhm		
	R....20	57.11.4224	220 kOhm		
	R....21	57.11.4223	22 kOhm		
	R....22	57.11.4106	10 MOhm		
	R....23	57.11.3432	4.3 kOhm	1%	
	R....24	57.11.3432	4.3 kOhm	1%	
	R....25	57.11.3432	4.3 kOhm	1%	
	R....26	57.11.3432	4.3 kOhm	1%	
	R....27	57.11.3203	20 kOhm	1%	
	R....28	57.11.4103	10 kOhm		
	R....29	57.11.4562	5.6 kOhm		
	R....30	57.11.4562	5.6 kOhm		
	R....31	57.11.4101	100 Ohm		
	R....32	57.11.4473	47 kOhm		
	R....33	57.11.4154	150 kOhm		
	R....34	57.11.4102	1 kOhm		
	R....35	57.11.3203	20 kOhm	1%	
	R....36	57.11.3203	20 kOhm	1%	
	T....01	1.022.218.00		Inputtransformer 1 : 1	St

S T U D E R 83/02/22 BBT VU-METER AMPLIFIER 1.820.730.81 PAGE 2

(01) 19.11.82 Lamp 6V 1W replaced by lamp 6V 0.03A (to high intensity)

Note 1 - Lamp 6 V,0.03A
Osram Nr. 2306
ITT Nr. 52373
Socket: Studer Nr. 53.04.0107, Alwega Nr. 4050 021
Note 2 - Contact pin: Studer 54.11.0125, Berg 75168-301-36
Bridge: Studer 54.01.0021, Philips 2422 024 88003
Note 3 - 5 kOhm Potentiometer
Allen Bradley Nr. E 28 502
Bourns Nr. 3386 F-1-502
Spectrol Nr. 63M 502 T010

Ce=Ceramic, El=Electrolytic, MPC=Polyester, PS=Polystyrol
Sal=Solid aluminium.

MANUFACTURER: ITT=Intermetal, Mot=Motorola, NS=National Semiconductors
Ph=Philips, Ses=Sescosem, Sie=Siemens, St=Studer,
Sx=Siliconix, TI=Texas Instruments

ORIG 82/08/09 (01) 82/11/19

S T U D E R 82/11/19 BBT VU-METER AMPLIFIER 1.820.730.00 PAGE 3

Note 1 - Lamp 6 V,0.03A
Osram Nr. 2306
ITT Nr. 52373
Socket: Studer Nr. 53.04.0107, Alwega Nr. 4050 021
Note 2 - Contact pin: Studer 54.11.0125, Berg 75168-301-36
Bridge: Studer 54.01.0021, Philips 2422 024 88003
Note 3 - 5 kOhm Potentiometer
Allen Bradley Nr. E 28 502
Bourns Nr. 3386 F-1-502
Spectrol Nr. 63M 502 T010

Ce=Ceramic, El=Electrolytic, MPC=Polyester, PS=Polystyrol
Sal=Solid aluminium.

MANUFACTURER: ITT=Intermetal, Mot=Motorola, NS=National Semiconductors
Ph=Philips, Ses=Sescosem, Sie=Siemens, St=Studer,
Sx=Siliconix, TI=Texas Instruments

ORIG 83/02/22

S T U D E R 83/02/22 BBT VU-METER AMPLIFIER 1.820.730.81 PAGE 3

VU PANEL 1.810.320–81 GR39/40
CALIBRATION PCB 1.820.731–00

CHANNEL CONTROL PCB 1.820.732–00

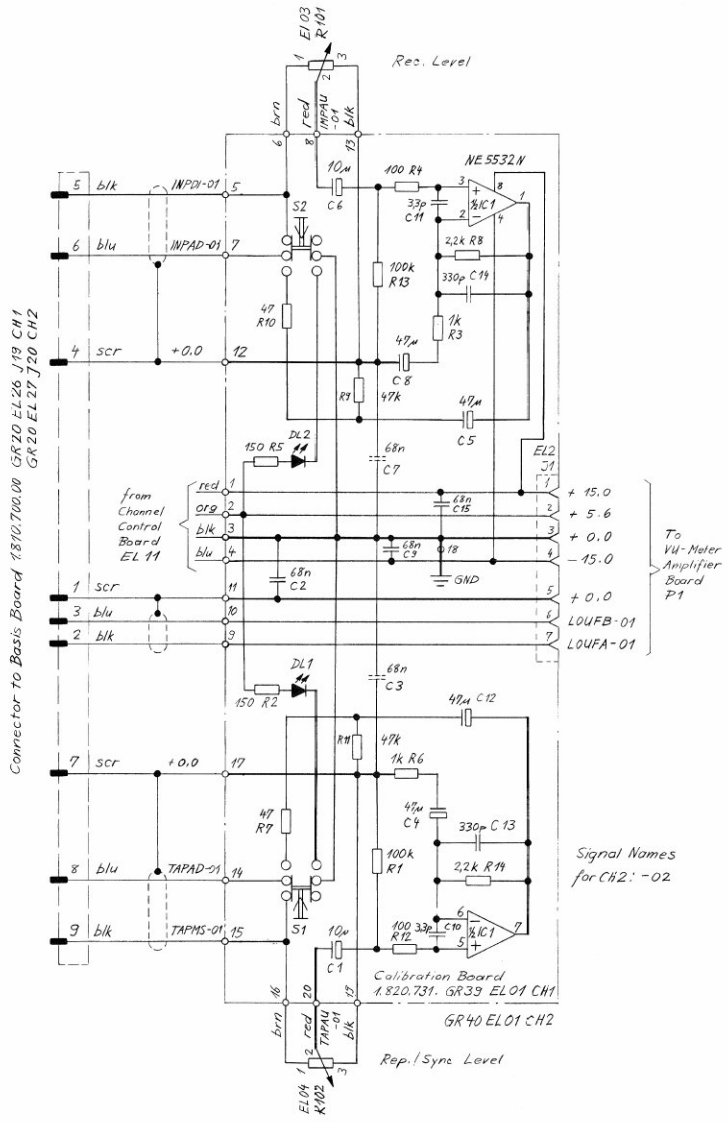

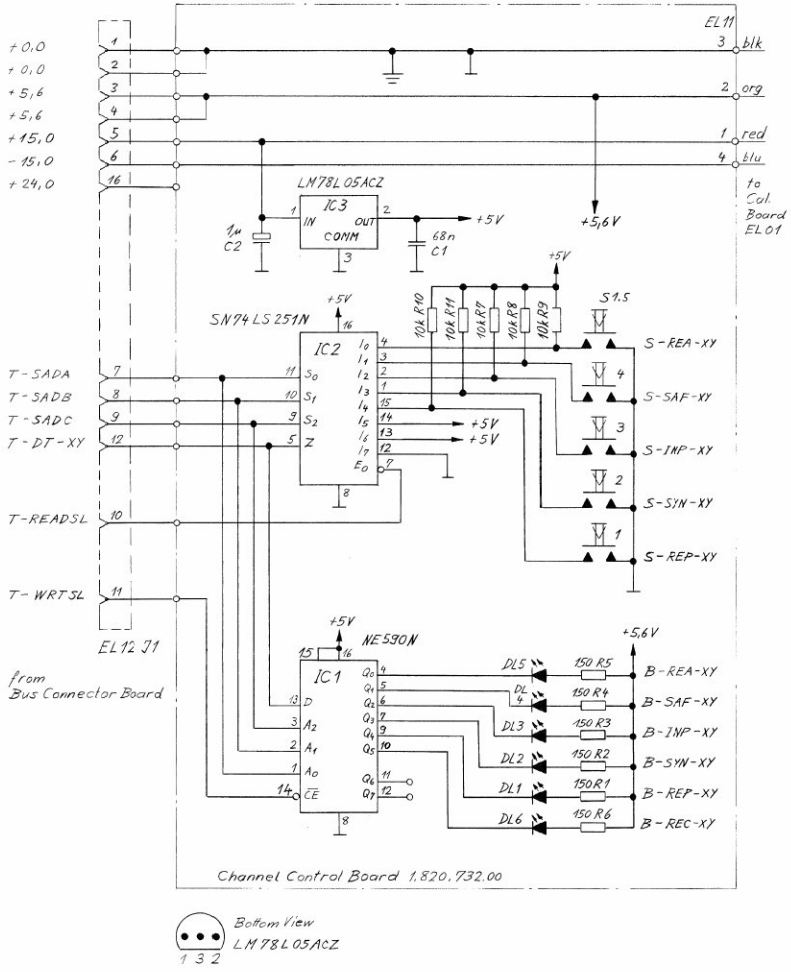

VU PANEL 1.810.320–81 GR39/40
CALIBRATION PCB 1.820.731–00

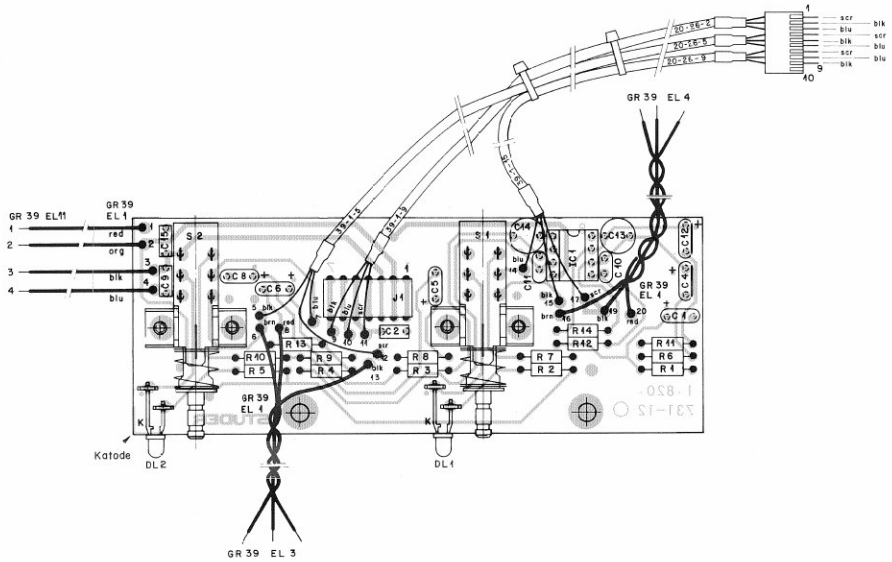

CHANNEL CONTROL PCB 1.820.732–00

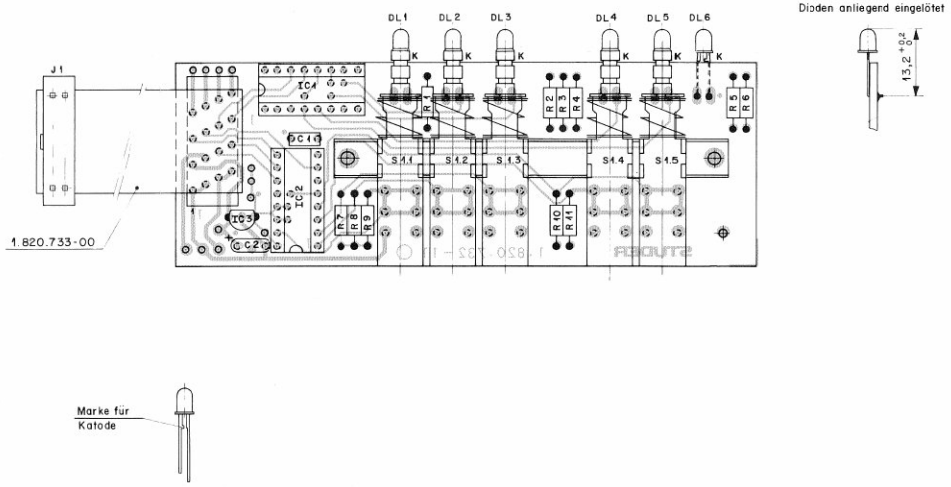

IND.	POS.NO.	PART NO.	VALUE	SPECIFICATIONS / EQUIVALENT	MANUF.
	C...001	59.26.2100	10 uF	16V. Sal	Ph
	C...002	59.99.0205	68 nF	Ce	
	C...003		not used		
	C...004	59.26.0470	47 uF	6V. Sal	Ph
	C...005	59.26.0470	47 uF	6V. Sal	Ph
	C...006	59.26.2100	10 uF	16V. Sal	Ph
	C...007		not used		
	C...008	59.26.0470	47 uF	6V. Sal	Ph
	C...009	59.99.0205	68 nF	Ce	
	C...010	59.34.0339	3.3 pF	Ce	
	C...011	59.34.0339	3.3 pF	Ce	
	C...012	59.26.0470	47 uF	6V. Sal	Ph
	C...013	59.05.2331	330 pF	PP	
	C...014	59.05.2331	330 pF	PP	
	C...015	59.99.0205	68 nF	Ce	
	DL..001	50.04.2130	CQV 13-5	Q 62703-Q 575	Sie
	DL..002	50.04.2130	CQV 13-5	Q 62703-Q 575	Sie
	IC..001	50.09.0105	NE592N	XR5532N, 5532NB	Sig,Ex,Ra
	J...001	54.01.0244	7 cont.	AMP Nr. 163.683-5	
	R...001	57.11.4104	100 kOhm		
	R...002	57.11.4151	150 Ohm		
	R...003	57.11.4102	1 kOhm		
	R...004	57.11.4101	100 Ohm		
	R...005	57.11.4151	150 Ohm		
	R...006	57.11.4102	1 kOhm		
	R...007	57.11.4470	47 Ohm		
	R...008	57.11.4222	2.2 kOhm		
	R...009	57.11.4473	47 kOhm		
	R...010	57.11.4470	47 Ohm		
	R...011	57.11.4473	47 kOhm		
	R...012	57.11.4101	100 Ohm		
	R...013	57.11.4104	100 kOhm		
	R...014	57.11.4222	2.2 kOhm		

S T U D E R 82/08/06 GAE CALIBRATION BOARD 1.820.731.00 PAGE 1

IND.	POS.NO.	PART NO.	VALUE	SPECIFICATIONS / EQUIVALENT	MANUF.
	R...101	58.10.9006	10 kOhm	log., Allen Bradley Nr. JA 1 N 072 S 103 AA	
	R...102	58.10.9006	10 kOhm	log., Allen Bradley Nr. JA 1 N 072 S 103 AA	
	S...001	1.820.731.01		2pole change over switch	St
	S...002	1.820.731.01		2pole change over switch	St

Ce=Ceramic, PP=Polypropylen, Sal=Solid aluminium

MANUFACTURER: Ex=Exar, Ph=Philips, Ra=Raytheon, Sie=Siemens,
Sig=Signetics, St=Studer.

ORIG 82/08/06

S T U D E R 82/08/06 GAE CALIBRATION BOARD 1.820.731.00 PAGE 2

IND.	POS.NO.	PART NO.	VALUE	SPECIFICATIONS / EQUIVALENT	MANUF.
	C...001	59.09.0205	68 nF	Ce	
	C...002	59.26.9109	1 uF	16V. Sal	Ph
	DL..001	50.04.2130	CQV 13-5	Q 62703-Q 575	Sie
	DL..002	50.04.2130	CQV 13-5	Q 62703-Q 575	Sie
	DL..003	50.04.2130	CQV 13-5	Q 62703-Q 575	Sie
	DL..004	50.04.2130	CQV 13-5	Q 62703-Q 575	Sie
	DL..005	50.04.2131	CQV 15-5	Q 62703-Q 585	Sie
	DL..006	50.04.2129	CQV 11-5	Q 62703-Q 571	Sie
	IC..001	50.15.0102	NE590N		Sig
	IC..002	50.06.0251	SN74LS251N	AM74LS251N	AMI,TI
	IC..003	50.10.0107	LM78L05ACZ	uA78L05AWC	Fc,NS
	J...001	54.14.5021	16 cont.	See note 1	
	R...001	57.11.4151	150 Ohm		
	R...002	57.11.4151	150 Ohm		
	R...003	57.11.4151	150 Ohm		
	R...004	57.11.4151	150 Ohm		
	R...005	57.11.4151	150 Ohm		
	R...006	57.11.4151	150 Ohm		
	R...007	57.11.4103	10 kOhm		
	R...008	57.11.4103	10 kOhm		
	R...009	57.11.4103	10 kOhm		
	R...010	57.11.4103	10 kOhm		
	R...011	57.11.4103	10 kOhm		
	S...001	1.820.732.01		5P2pole change over switch	St

S T U D E R 82/08/06 GAE CHANNEL CONTR. BOARD 1.820.732.00 PAGE 1

IND.	POS.NO.	PART NO.	VALUE	SPECIFICATIONS / EQUIVALENT	MANUF.

Note 1 - Yamaichi Nr. FAS-16-17, Burndy Nr. FRS-16 BD-49
Connection cable Nr. 1.820.733.00

Ce=Ceramic, Sal=Solid aluminium

MANUFACTURER: AMI=American Microsystem Inc, Fc=Fairchild,
NS=National Semicondutors, Ph=Philips, Sie=Siemens,
Sig=Signetics, St=Studer, TI=Texsas Instruments.

ORIG 82/08/06

S T U D E R 82/08/06 GAE CHANNEL CONTR. BOARD 1.820.732.00 PAGE 2

TC CHANNEL CONTROL PCB 1.820.735–00

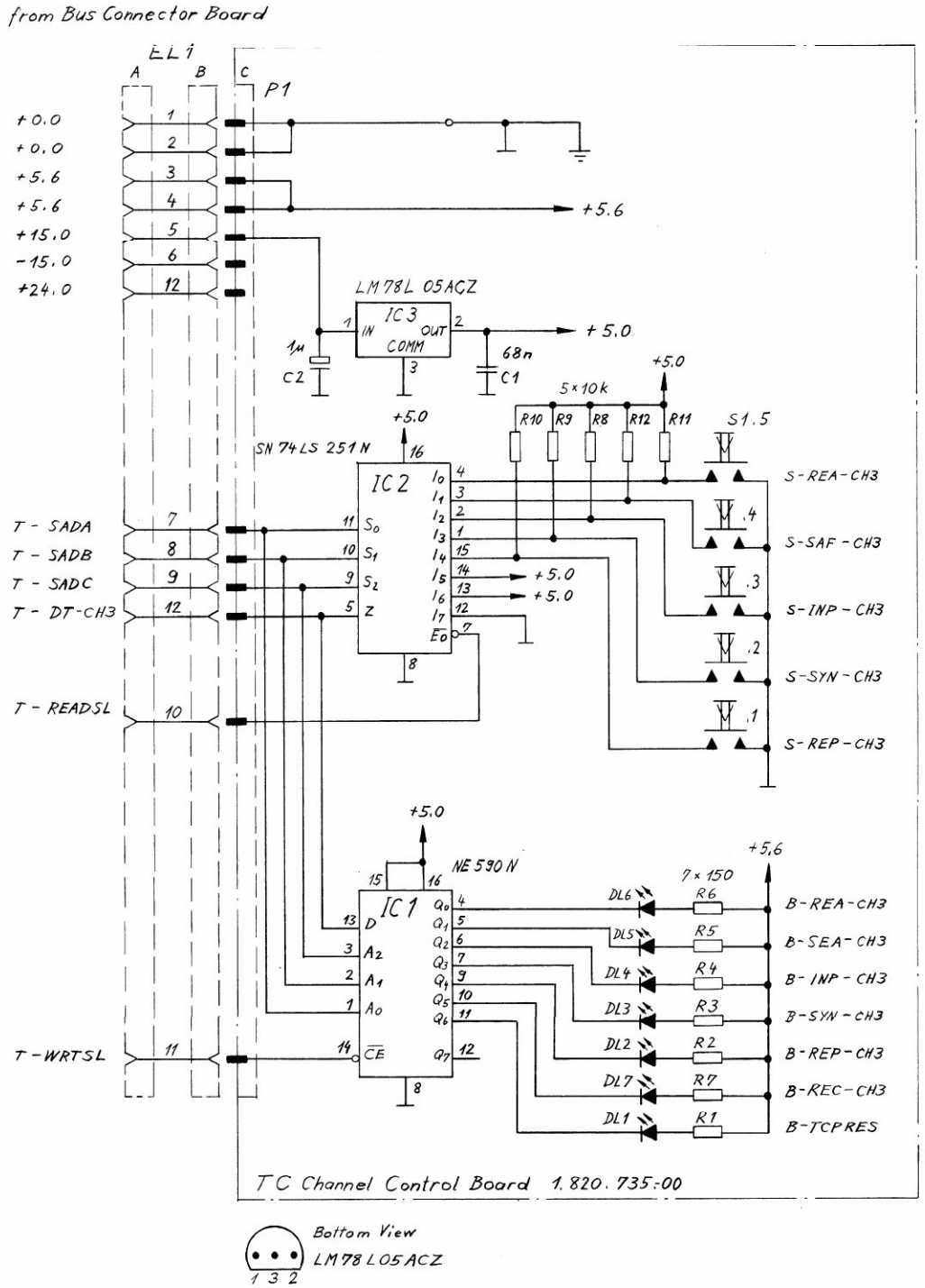

26.5.83	Gämperle L511	A810 Audio Section		GR 44
STUDER	TC Channel Control Board	SC	1.820.735-00	PAGE 1 OF 1

TC CHANNEL CONTROL PCB 1.820.735–00

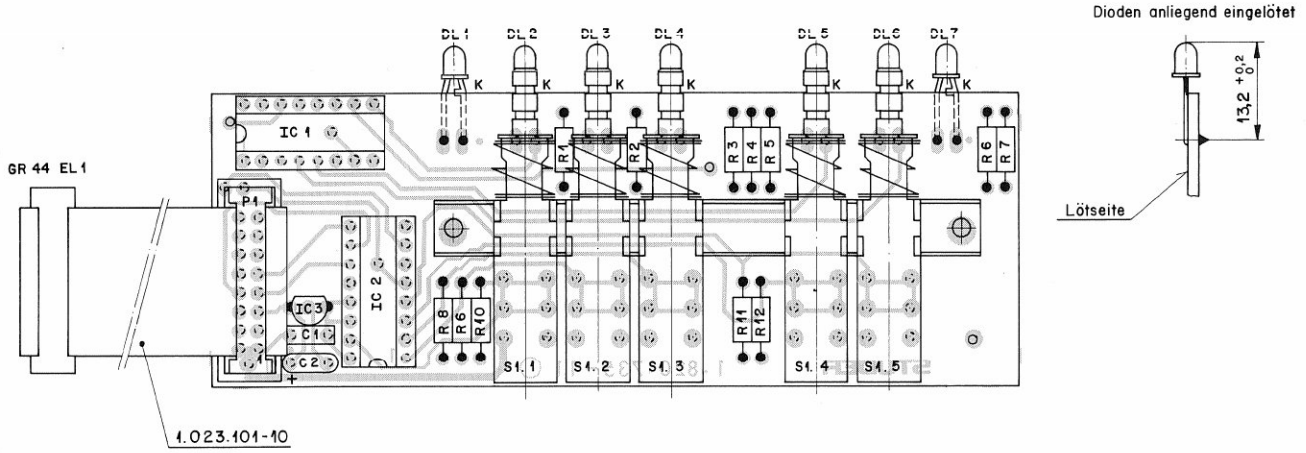

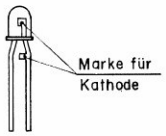

IND.	POS.NO.	PART NO.	VALUE	SPECIFICATIONS / EQUIVALENT	MANUF.
	C...001	59.99.0205	68 nF	Ce	
	C...002	59.26.9109	1 uF	16V, Sal	Ph
	DL..001	50.04.2131	CQV 15-5	Q 62703-Q 585	Sie
	DL..002	50.04.2130	CQV 13-5	Q 62703-Q 575	Sie
	DL..003	50.04.2130	CQV 13-5	Q 62703-Q 575	Sie
	DL..004	50.04.2130	CQV 13-5	Q 62703-Q 575	Sie
	DL..005	50.04.2130	CQV 13-5	Q 62703-Q 575	Sie
	DL..006	50.04.2131	CQV 15-5	Q 62703-Q 585	Sie
	DL..007	50.04.2129	CQV 11-5	Q 62703-Q 571	Sie
	IC..001	50.15.0102	NE590N		Sig
	IC..002	50.06.0251	SN74LS251N	AM74LS251N	AMI,TI
	IC..003	50.10.0107	LM78L05ACZ	uA78L05AWC	Fc,NS
	P...001	54.14.2002	16 cont.	See note 1	
	R...001	57.11.4151	150 Ohm		
	R...002	57.11.4151	150 Ohm		
	R...003	57.11.4151	150 Ohm		
	R...004	57.11.4151	150 Ohm		
	R...005	57.11.4151	150 Ohm		
	R...006	57.11.4151	150 Ohm		
	R...007	57.11.4151	150 Ohm		
	R...008	57.11.4103	10 kOhm		
	R...009	57.11.4103	10 kOhm		
	R...010	57.11.4103	10 kOhm		
	R...011	57.11.4103	10 kOhm		
	R...012	57.11.4103	10 kOhm		
	S...001	1.820.732.01		5*2pole change over switch	St

IND.	POS.NO.	PART NO.	VALUE	SPECIFICATIONS / EQUIVALENT	MANUF.

Note 1 - Yamaichi Nr. FAP-16-08/4 Burndy Nr. BPH 9 B 16 B00 TN
Connection cable Studer Nr. 1.023.101.10

Ce=Ceramic, Sal=Solid aluminium

MANUFACTURER: AMI=American Microsystem Inc, Fc=Fairchild,
NS=National Semicondutors, Ph=Philips, Sie=Siemens,
Sig=Signetics, St=Studer, TI=Texsas Instruments.

MONITOR AMPLIFIER PCB 1.810.722–00 GR41
MONITOR AMPLIFIER PCB 1.810.722–81 GR41

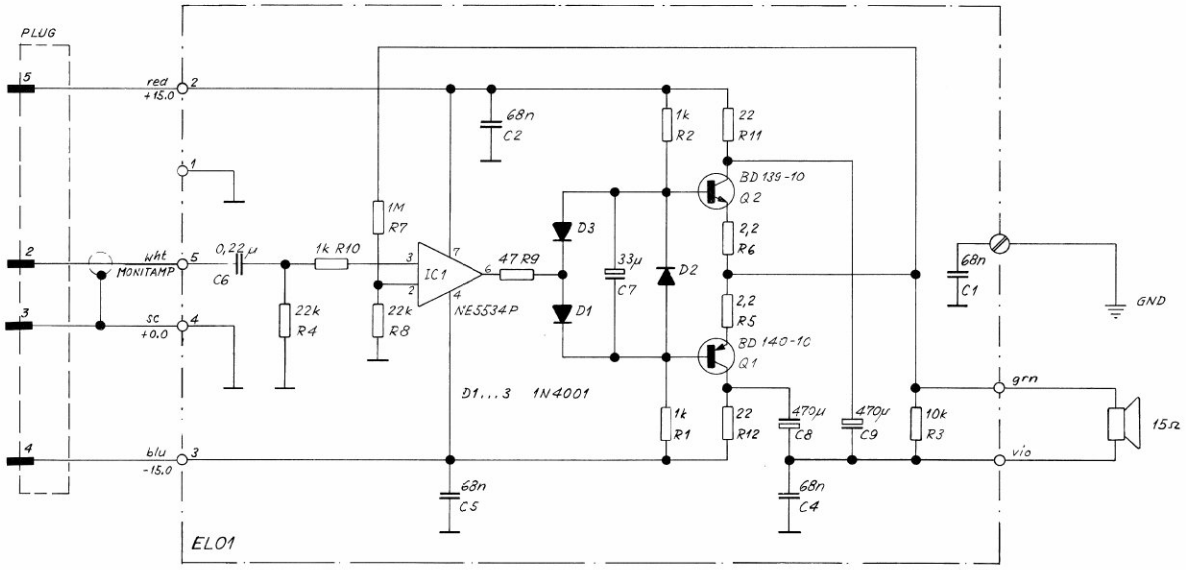

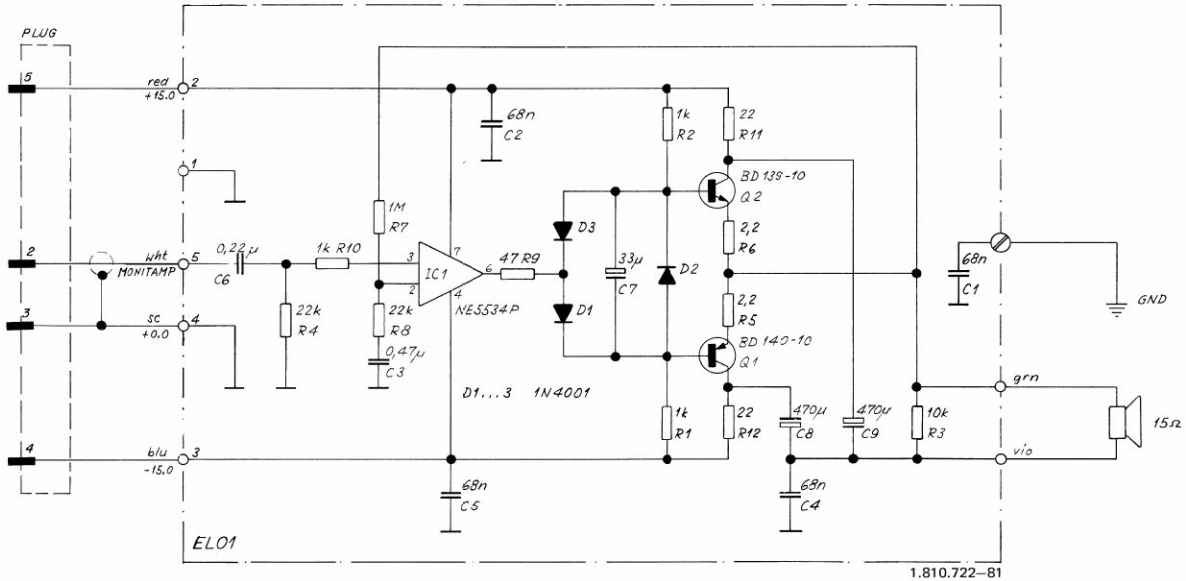

MONITOR AMPLIFIER PCB 1.810.722–00 GR41

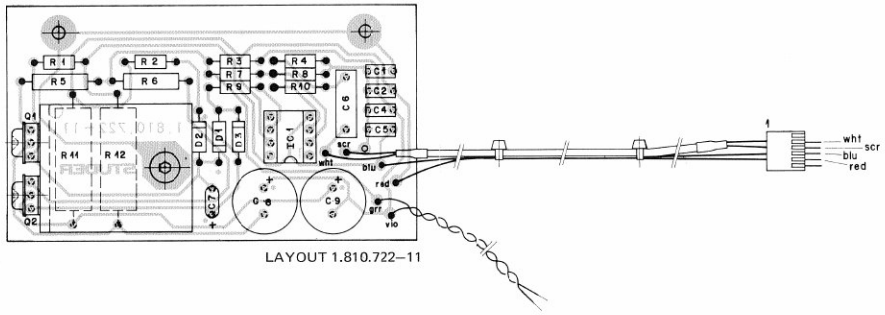

LAYOUT 1.810.722–11

MONITOR AMPLIFIER PCB 1.810.722–81 GR41

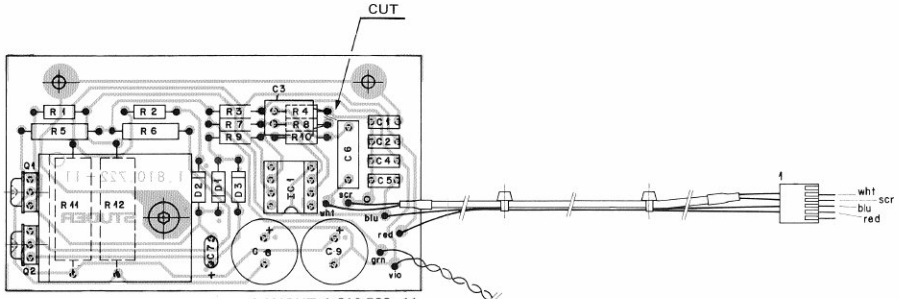

LAYOUT 1.810.722–11

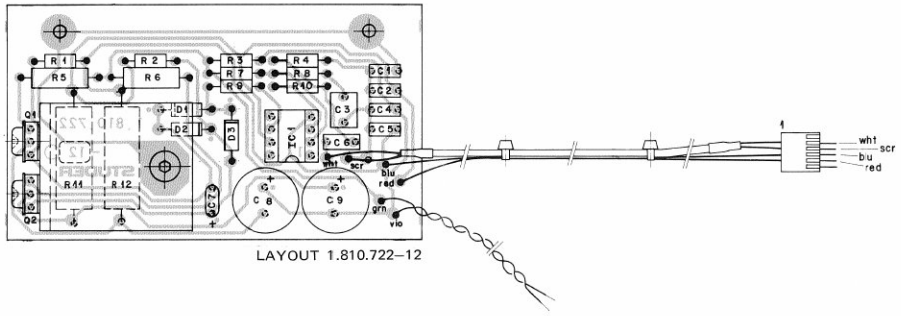

LAYOUT 1.810.722–12

IND.	POS.NO.	PART NO.	VALUE	SPECIFICATIONS / EQUIVALENT	MANUF.
	C..0001	59.99.0205	68 nF	-20%, Ce	
	C..0002	59.99.0205	68 nF	-20%, Ce	
	C..0004	59.99.0205	68 nF	-20%, Ce	
	C..0005	59.99.0205	68 nF	-20%, Ce	
	C..0006	59.06.5224	0.22 uF	10%	
	C..0007	59.26.1330	33 uF	20%, Sal	Ph
	C..0008	59.22.4471	470 uF	20%, 16V, El	
	C..0009	59.22.4471	470 uF	20%, 16V, El	
	D..0001	50.04.0122	1N4001	1N4002, 1N4003, 1N4004	Fc,Gi,Mot,Sol
	D..0002	50.04.0122	1N4001	1N4002, 1N4003, 1N4004	Fc,Gi,Mot,Sol
	D..0003	50.04.0122	1N4001	1N4002, 1N4003, 1N4004	Fc,Gi,Mot,Sol
	IC.0001	50.05.0243	NE5534N	NE5534P	Sig,TI
	Q..0001	50.03.0452	BD140-10	2SA496-O	Ph,Sie,Tf,To
	Q..0002	50.03.0451	BD139-10	2SC496-O	Ph,Sie,Tf,To
	R..0001	57.11.4102	1 kOhm	5%	
	R..0002	57.11.4102	1 kOhm	5%	
	R..0003	57.11.4103	10 kOhm	5%	
	R..0004	57.11.4223	22 kOhm	5%	
	R..0005	57.13.4229	2.2 Ohm	5%, 0.3W	
	R..0006	57.13.4229	2.2 Ohm	5%, 0.3W	
	R..0007	57.11.4105	1 MOhm	5%	
	R..0008	57.11.4223	22 kOhm	5%	
	R..0009	57.11.4470	47 Ohm	5%	
	R..0010	57.11.4102	1 kOhm	5%	
	R..0011	57.56.5220	22 Ohm	10%, 4W	
	R..0012	57.56.5220	22 Ohm	10%, 4W	

Ce=Ceramic, El=Electrolytic

Manufacturers: Fc=Fairchild, Gi=General Instruments, Mot=Motorola
Ph=Philips, Sie=Siemens, Sig=Signetics, Sol=Solitron,
Tf=Telefunken, TI=Texas Instruments, To=Toshiba

ORIG 81/09/07

IND.	POS.NO.	PART NO.	VALUE	SPECIFICATIONS / EQUIVALENT	MANUF.
	C..0001	59.99.0205	68 nF	-10%, Ce	
	C..0002	59.99.0205	68 nF	-10%, Ce	
	C..0003	59.06.5474	0.47 uF	10%	
	C..0004	59.99.0205	68 nF	-10%, Ce	
	C..0005	59.99.0205	68 nF	-10%, Ce	
	C..0006	59.06.5226	0.22 uF	10%	
	C..0007	59.26.1330	33 uF	10%, Sal	Ph
	C..0008	59.22.4471	470 uF	10%, 16V, El	
	C..0009	59.22.4471	470 uF	10%, 16V, El	
	D..0001	50.04.0122	1N4001	1N4002, 1N4003, 1N4004	Fc,Gi,Mot,Sol
	D..0002	50.04.0122	1N4001	1N4002, 1N4003, 1N4004	Fc,Gi,Mot,Sol
	D..0003	50.04.0122	1N4001	1N4002, 1N4003, 1N4004	Fc,Gi,Mot,Sol
	IC.0001	50.05.0243	NE5534N	NE5534P	Sig,TI
	Q..0001	50.03.0452	BD140-10	2SA496-O	Ph,Sie,Tf,To
	Q..0002	50.03.0451	BD139-10	2SC496-O	Ph,Sie,Tf,To
	R..0001	57.11.4102	1 kOhm	5%	
	R..0002	57.11.4102	1 kOhm	5%	
	R..0003	57.11.4103	10 kOhm	5%	
	R..0004	57.11.4223	22 kOhm	5%	
	R..0005	57.13.4229	2.2 Ohm	5%, 0.3W	
	R..0006	57.13.4229	2.2 Ohm	5%, 0.3W	
	R..0007	57.11.4105	1 MOhm	5%	
	R..0008	57.11.4223	22 kOhm	5%	
	R..0009	57.11.4470	47 Ohm	5%	
	R..0010	57.11.4102	1 kOhm	5%	
	R..0011	57.56.5220	22 Ohm	10%, 4W	
	R..0012	57.56.5220	22 Ohm	10%, 4W	

Ce=Ceramic, El=Electrolytic

Manufacturer: Fc=Fairchild, Gi=General Instruments, Mot=Motorola
Ph=Philips, Sie=Siemens, Sig=Signetics, Sol=Solitron,
Tf=Telefunken, TI=Texas Instruments, To=Toshiba

ORIG 82/07/22

MONITOR UNIT 1.810.345–81 GR91
MONITOR UNIT PCB 1.810.721–00/81

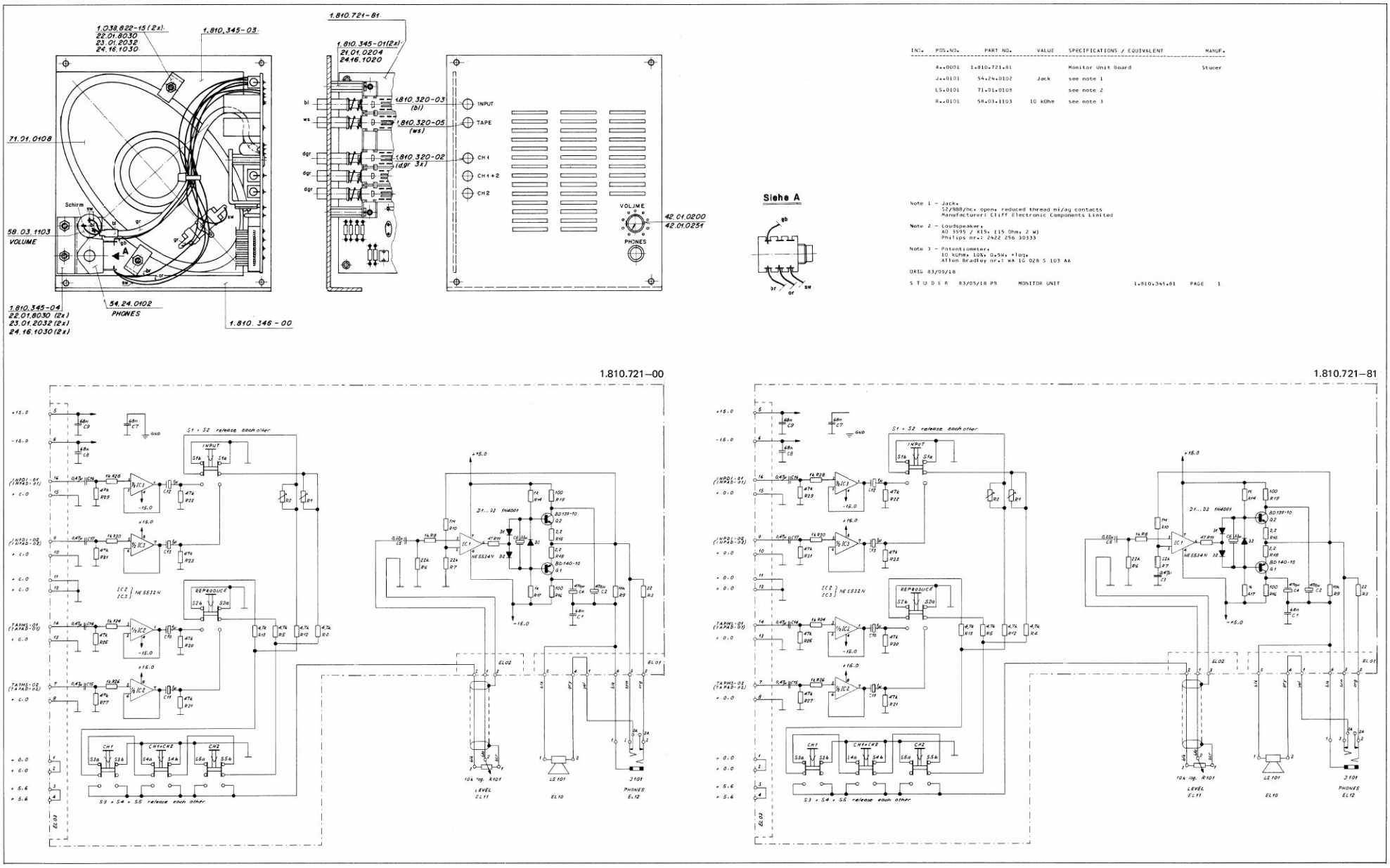

INO.	POS.NO.	PART NO.	VALUE	SPECIFICATIONS / EQUIVALENT	MANUF.
	A..0001	1.810.721.81		Monitor Unit Board	Studer
	J..0101	54.24.0102	Jack	see note 1	
	LS.0101	71.01.0103		see note 2	
	R..0101	58.03.1103	10 kOhm	see note 3	

Note 1 - Jack.
52/988/hc. open. reduced thread ni/ag contacts
Manufacturer: Cliff Electronic Components Limited

Note 2 - Loudspeaker.
AO 3595 / X15. (15 Ohm. 2 W)
Philips nr.: 2422 256 30333

Note 3 - Potentiometer.
10 kOhm. 10ky 0.5W. +log.
Allen Bradley nr.: WA 1G 028 S 103 AA

ORIG 83/05/18

S T U D E R 83/05/18 PR MONITOR UNIT 1.810.345.81 PAGE 1

MONITOR UNIT 1.810.345–81 GR91
MONITOR UNIT PCB 1.810.721–00

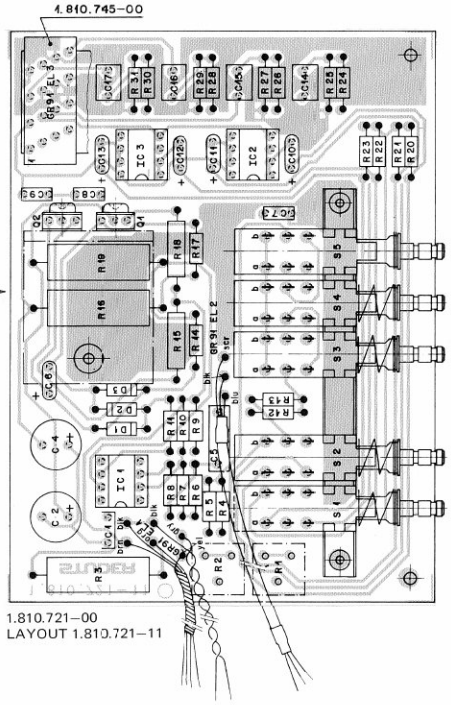

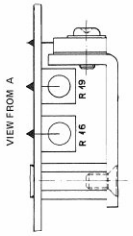

IND.	POS.NO.	PART NO.	VALUE	SPECIFICATIONS / EQUIVALENT	MANUF.
	C..0001	59.99.0205	68 nF	20%, Ce	
	C..0002	59.22.4471	470 uF	20%, 16V, El	
	C..0004	59.22.4471	470 uF	20%, 16V, El	
	C..0005	59.06.5224	0.22 uF	5%	
	C..0006	59.26.1330	33 uF	20%, Sal	Ph
	C..0007	59.99.0205	68 nF	20%, Ce	
	C..0008	59.99.0205	68 nF	20%, Ce	
	C..0009	59.99.0205	68 nF	20%, Ce	
	C..0010	59.26.9109	1 uF	20%, Sal	Ph
	C..0011	59.26.9109	1 uF	20%, Sal	Ph
	C..0012	59.26.9109	1 uF	20%, Sal	Ph
	C..0013	59.26.9109	1 uF	20%, Sal	Ph
	C..0014	59.06.5474	0.47 uF	5%	
	C..0015	59.06.5474	0.47 uF	5%	
	C..0016	59.06.5474	0.47 uF	5%	
	C..0017	59.06.5474	0.47 uF	5%	
	D..0001	50.04.0122	1N4001	1N4002, 1N4003, 1N4004	Fc+GI+Mot+Sol
	D..0002	50.04.0122	1N4001	1N4002, 1N4003, 1N4004	Fc+GI+Mot+Sol
	D..0003	50.04.0122	1N4001	1N4002, 1N4003, 1N4004	Fc+GI+Mot+Sol
	IC.0001	50.05.0243	NE5534N	NE5534P, 5534NB	Ra+Sig+TI
	IC.0002	50.09.0105	NE5532N	XR5532N, 5532NB	Ex+Ra+Sig
	IC.0003	50.09.0105	NE5532N	XR5532N, 5532NB	Ex+Ra+Sig
	J..0001	54.14.5021	15 cont.	see note 1	
	Q..0001	50.03.0452	BD140-10	2SA496-O	Ph+Sie+Tf+To
	Q..0002	50.03.0451	BD139-10	2SC496-O	Ph+Sie+Tf+To
	R..0001		not used		
	R..0002		not used		
	R..0003	57.56.5220	22 Ohm	10%, 4W	
	R..0004	57.11.3472	4.7 kOhm	1%	
	R..0005	57.11.3472	4.7 kOhm	1%	
	R..0006	57.11.4223	22 kOhm	5%	

S T U D E R 83/04/07 PB MONITOR UNIT BOARD 1.810.721.00 PAGE 1

IND.	POS.NO.	PART NO.	VALUE	SPECIFICATIONS / EQUIVALENT	MANUF.
	R..0007	57.11.4223	22 kOhm	5%	
	R..0008	57.11.4102	1 kOhm	5%	
	R..0009	57.11.4103	10 kOhm	5%	
	R..0010	57.11.4105	1 MOhm	5%	
	R..0011	57.11.4470	47 Ohm	5%	
	R..0012	57.11.3472	4.7 kOhm	1%	
	R..0013	57.11.3472	4.7 kOhm	1%	
	R..0014	57.11.4102	1 kOhm	5%	
	R..0015	57.13.4229	2.2 Ohm	5%	
	R..0016	57.56.5101	100 Ohm	10%, 4W	
	R..0017	57.11.4102	1 kOhm	5%	
	R..0018	57.13.4229	2.2 Ohm	5%	
	R..0019	57.56.5101	100 Ohm	10%, 4W	
	R..0020	57.11.4473	47 kOhm	5%	
	R..0021	57.11.4473	47 kOhm	5%	
	R..0022	57.11.4473	47 kOhm	5%	
	R..0023	57.11.4473	47 kOhm	5%	
	R..0024	57.11.4102	1 kOhm	5%	
	R..0025	57.11.4473	47 kOhm	5%	
	R..0026	57.11.4102	1 kOhm	5%	
	R..0027	57.11.4473	47 kOhm	5%	
	R..0028	57.11.4102	1 kOhm	5%	
	R..0029	57.11.4473	47 kOhm	5%	
	R..0030	57.11.4102	1 kOhm	5%	
	R..0031	57.11.4473	47 kOhm	5%	
	S..1..5	1.810.721.01		see note 2	

PC-Board 1.810.721-11 used.

Note 1 - Yamaichi Nr. FAS-16-17, Burndy Nr. FRS-16 BD-4P
Connection cable Studer Nr. 1.810.745.00

Note 2 - Pushbutton switches,
latching, release each other (S1+ S2)(S3+S4+S5)
Manufacturer: Schadow (ITT), serie FD

Ce=Ceramic, El=Electrolytic, Sal=Solid aluminium

MANUFACTURER: Ex=Exar, Fc=Fairchild, GI=General Instruments,
Mot=Motorola, Ph=Philips, Ra=Raytheon, Sie=Siemens,
Sig=Signetics, Sol=Solitron, Tf=Telefunken,
TI=Texas Instruments, To=Toshiba

ORIG 83/04/07

S T U D E R 83/04/07 PB MONITOR UNIT BOARD 1.810.721.00 PAGE 3

MONITOR UNIT 1.810.345–81 GR91
MONITOR UNIT PCB 1.810.721–81

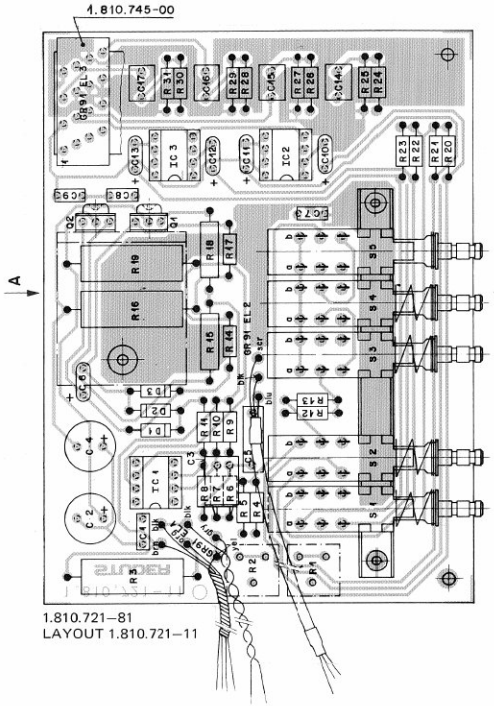

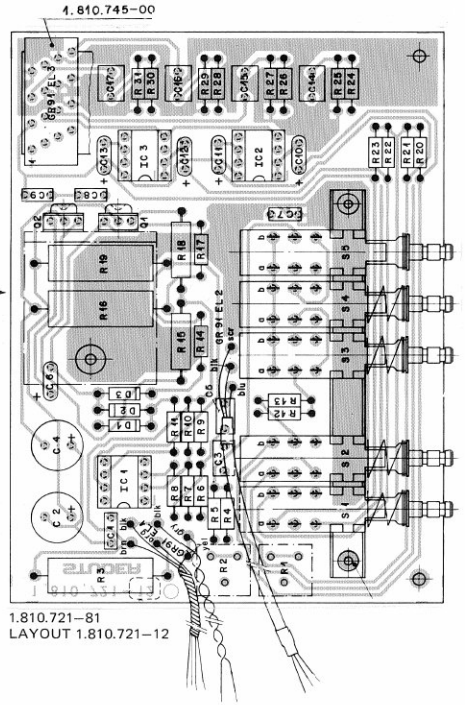

IND.	POS.NO.	PART NO.	VALUE	SPECIFICATIONS / EQUIVALENT	MANUF.
	C..0001	59.99.0205	68 nF	20%, Ce	
	C..0002	59.22.4471	470 uF	20%, 16V, El	
	C..0003	59.06.5474	0.47 uF	5%	
	C..0004	59.22.4471	470 uF	20%, 16V, El	
	C..0005	59.06.5224	0.22 uF	5%	
	C..0006	59.26.1330	33 uF	20%, Sal	Ph
	C..0007	59.99.0205	68 nF	20%, Ce	
	C..0008	59.99.0205	68 nF	20%, Ce	
	C..0009	59.99.0205	68 nF	20%, Ce	
	C..0010	59.26.9109	1 uF	20%, Sal	Ph
	C..0011	59.26.9109	1 uF	20%, Sal	Ph
	C..0012	59.26.9109	1 uF	20%, Sal	Ph
	C..0013	59.26.9109	1 uF	20%, Sal	Ph
	C..0014	59.06.5474	0.47 uF	5%	
	C..0015	59.06.5474	0.47 uF	5%	
	C..0016	59.06.5474	0.47 uF	5%	
	C..0017	59.06.5474	0.47 uF	5%	
	D..0001	50.04.0122	1N4001	1N4002, 1N4003, 1N4004	Fc+GI+Mot+Sol
	D..0002	50.04.0122	1N4001	1N4002, 1N4003, 1N4004	Fc+GI+Mot+Sol
	D..0003	50.04.0122	1N4001	1N4002, 1N4003, 1N4004	Fc+GI+Mot+Sol
	IC.0001	50.05.0243	NE5534N	NE5534P, 5534NB	Ra+Sig+TI
	IC.0002	50.09.0105	NE5532N	XR5532N, 5532NB	Ex+Ra+Sig
	IC.0003	50.09.0105	NE5532N	XR5532N, 5532NB	Ex+Ra+Sig
	J..0001	54.14.5021	16 cont.	see note 1	
	Q..0001	50.03.0452	BD140-10	2SA496-O	Ph+Sie+Tf+To
	Q..0002	50.03.0451	BD139-10	2SC496-O	Ph+Sie+Tf+To
	R..0001		not used		
	R..0002		not used		
	R..0003	57.56.5220	22 Ohm	10%, 4W	
	R..0004	57.11.3472	4.7 kOhm	1%	
	R..0005	57.11.3472	4.7 kOhm	1%	
	R..0006	57.11.4223	22 kOhm	5%	

S T U D E R 83/04/07 PB MONITOR UNIT BOARD 1.810.721.81 PAGE 1

IND.	POS.NO.	PART NO.	VALUE	SPECIFICATIONS / EQUIVALENT	MANUF.
	R..0007	57.11.4223	22 kOhm	5%	
	R..0008	57.11.4102	1 kOhm	5%	
	R..0009	57.11.4103	10 kOhm	5%	
	R..0010	57.11.4105	1 MOhm	5%	
	R..0011	57.11.4470	47 Ohm	5%	
	R..0012	57.11.3472	4.7 kOhm	1%	
	R..0013	57.11.3472	4.7 kOhm	1%	
	R..0014	57.11.4102	1 kOhm	5%	
	R..0015	57.13.4229	2.2 Ohm	5%	
	R..0016	57.56.5101	100 Ohm	10%, 4W	
	R..0017	57.11.4102	1 kOhm	5%	
	R..0018	57.13.4229	2.2 Ohm	5%	
	R..0019	57.56.5101	100 Ohm	10%, 4W	
	R..0020	57.11.4473	47 kOhm	5%	
	R..0021	57.11.4473	47 kOhm	5%	
	R..0022	57.11.4473	47 kOhm	5%	
	R..0023	57.11.4473	47 kOhm	5%	
	R..0024	57.11.4102	1 kOhm	5%	
	R..0025	57.11.4473	47 kOhm	5%	
	R..0026	57.11.4102	1 kOhm	5%	
	R..0027	57.11.4473	47 kOhm	5%	
	R..0028	57.11.4102	1 kOhm	5%	
	R..0029	57.11.4473	47 kOhm	5%	
	R..0030	57.11.4102	1 kOhm	5%	
	R..0031	57.11.4473	47 kOhm	5%	
	S..1..5	1.810.721.01		see note 2	

PC-Board 1.810.721-12 used.

Note 1 - Yamaichi Nr. FAS-16-17, Burndy Nr. FRS-16 BD-4P
Connection cable Studer Nr. 1.810.745.00

Note 2 - Pushbutton switches,
latching, release each other (S1+ S2)(S3+S4+S5)
Manufacturer: Schadow (ITT), serie FD

Ce=Ceramic, El=Electrolytic, Sal=Solid aluminium

MANUFACTURER: Ex=Exar, Fc=Fairchild, GI=General Instruments,
Mot=Motorola, Ph=Philips, Ra=Raytheon, Sie=Siemens,
Sig=Signetics, Sol=Solitron, Tf=Telefunken,
TI=Texas Instruments, To=Toshiba

ORIG 83/04/07

S T U D E R 83/04/07 PB MONITOR UNIT BOARD 1.810.721.81 PAGE 3

TIME CODE READ/WRITE UNIT PCB 1.820.721–00 GR20 EL6 "ESE"

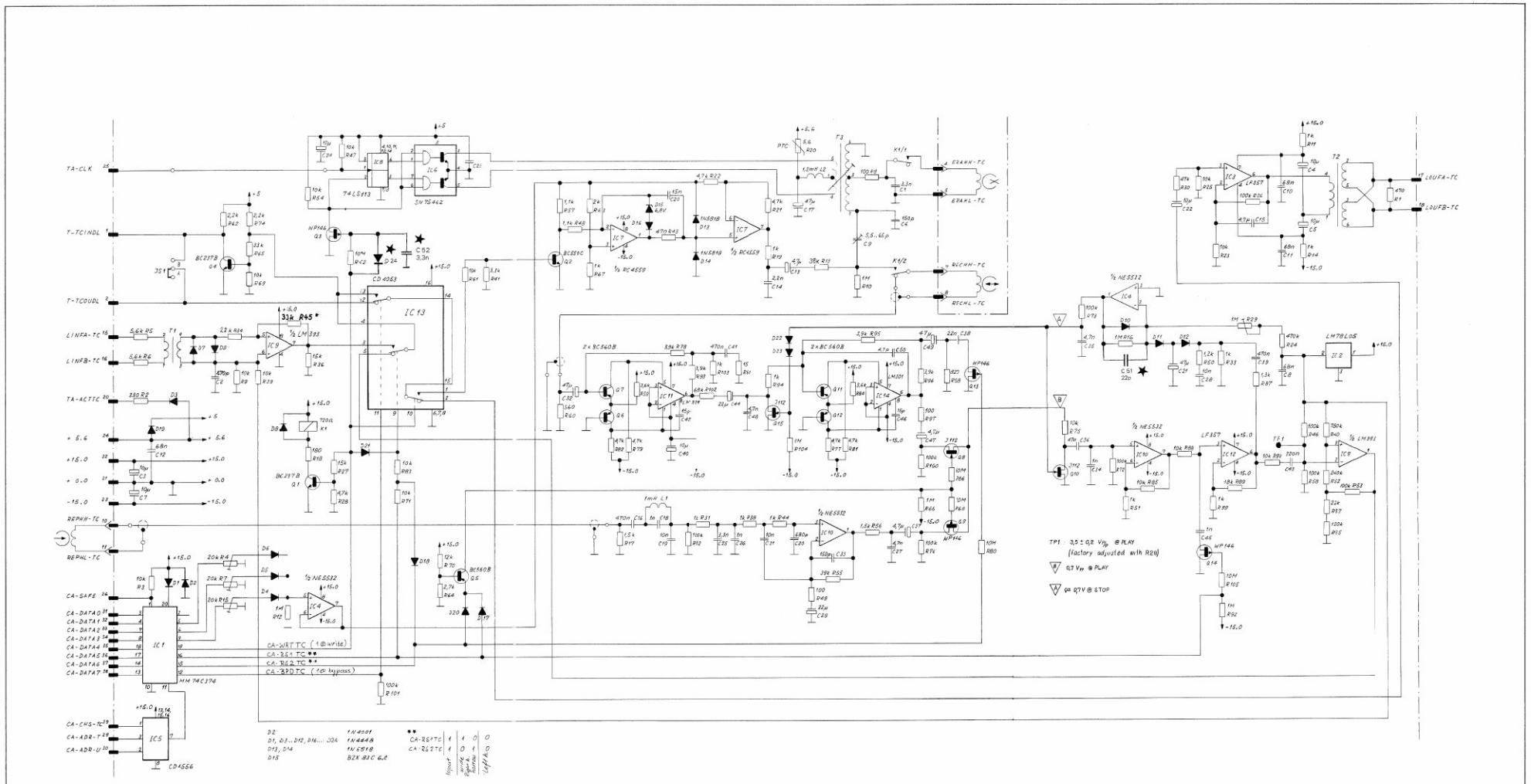

WORKS ONLY IN CONJUNCTION WITH COMMAND UNIT 1.810.734–00 (LCD)

★HAS BEEN MODIFIED

TIME CODE READ/WRITE UNIT PCB 1.820.721–00 GR20 EL6 "ESE"

Bestückungsseite

CODE READ/WRITE UNIT 1.820.721

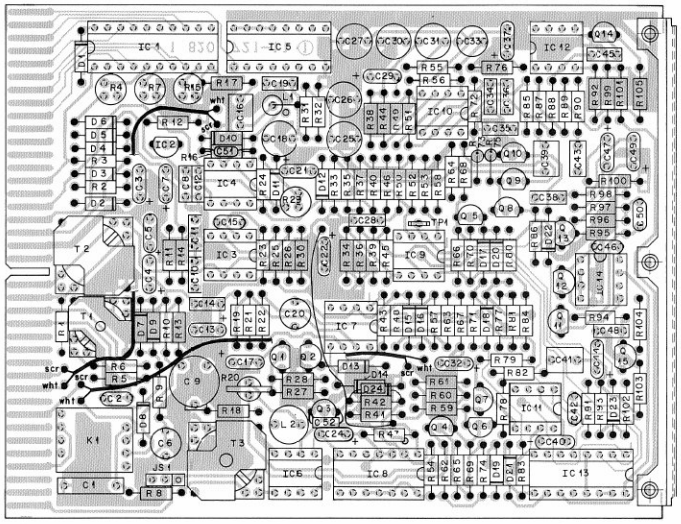

IND.	POS.NO.	PART NO.	VALUE	SPECIFICATIONS / EQUIVALENT	MANUF.
	C..0001	59.11.6337	3.3 nF	5%	
	C..0002	59.34.5471	470 pF	2%, Co	
	C..0003	59.26.2100	10 uF	-20%, 16V, Sal	Ph
	C..0004	59.26.2100	10 uF	-20%, 16V, Sal	Ph
	C..0005	59.26.2100	10 uF	-20%, 16V, Sal	Ph
	C..0006	59.05.2151	150 pF	2.5%	
	C..0007	59.26.2100	10 uF	-20%, 16V, Sal	Ph
	C..0008	59.29.0205	68 nF	-20%, Co	
	C..0009	59.18.0102	65 pF	Trimmer Capacitor, Philips Nr 2222 808 01001	
	C..0010	59.29.0205	68 nF	-20%, Co	
	C..0011	59.29.0205	68 nF	-20%, Co	
	C..0012	59.29.0205	68 nF	-20%, Co	
	C..0013	59.26.5479	4.7 uF	-20%, 25V, Sal	Ph
	C..0014	59.06.0222	2.2 nF	10%	
	C..0015	59.34.0479	4.7 pF	20%, Cw	
	C..0016	59.06.0474	470 nF	10%	
	C..0017	59.26.0470	47 uF	-20%, 6.3V, Sal	Ph
	C..0018	59.05.1102	1 nF	1%	
	C..0019	59.06.0103	10 nF	10%	
	C..0020	59.05.2153	15 nF	2.5%	
	C..0021	59.26.0470	47 uF	-20%, 6.3V, Sal	Ph
	C..0022	59.26.2100	10 uF	-20%, 16V, Sal	Ph
	C..0023		not used		
	C..0024	59.26.2100	10 uF	-20%, 16V, Sal	Ph
	C..0025	59.05.1332	3.3 nF	1%	
	C..0026	59.05.1102	1 nF	1%	
	C..0027	59.05.1472	4.7 nF	1%	
	C..0028	59.06.0103	10 nF	10%	
	C..0029	59.26.1220	22 uF	-20%, 10V, Sal	Ph
	C..0030	59.05.1681	680 pF	1%	
	C..0031	59.05.1103	10 nF	1%	
	C..0032	59.26.0470	47 uF	-20%, 6.3V, Sal	Ph
	C..0033	59.05.2151	150 pF	2.5%	
	C..0034	59.06.0102	1 nF	10%	
	C..0035	59.06.0472	4.7 nF	10%	
	C..0036	59.06.0473	47 nF	10%	
	C..0037	59.26.5479	4.7 uF	-20%, 25V, Sal	Ph

S T U D E R (02) 83/05/26 PB CODE READ/WRITE UNIT 1.820.721.00 PAGE 1

IND.	POS.NO.	PART NO.	VALUE	SPECIFICATIONS / EQUIVALENT	MANUF.
	C..0038	59.06.0223	22 nF	1%	
	C..0039	59.06.0474	470 nF	1%	
	C..0040	59.26.2100	10 uF	-20%, 16V, Sal	Ph
	C..0041	59.06.0474	470 nF	1%	
	C..0042	59.34.1150	15 pF	20%, Co	
	C..0043	59.06.0224	220 nF	1%	
	C..0044	59.26.1220	22 uF	-20%, 16V, Sal	Ph
	C..0045	59.06.0102	1 nF	1%	
	C..0046	59.34.1150	15 pF	20%, Co	
	C..0047	59.26.4479	4.7 uF	-20%, 25V, Sal	Ph
	C..0048	59.06.0472	4.7 nF	1%	
	C..0049	59.26.0470	47 uF	-20%, 6.3V, Sal	Ph
	C..0050	59.34.0479	4.7 pF	20%, Co	
(02)	C..0051	59.29.0609	22 pF	10%, Co	
(02)	C..0052	59.06.0332	3.3 nF	10%	
	D..0001	50.04.0125	1N4448		ITT+Ph+Ses+TI
	D..0002	50.04.0122	1N4001	1N4002, 1N4003, 1N4004	Fc+GI+Mot
	D..0003	50.04.0125	1N4448		ITT+Ph+Ses+TI
	D..0004	50.04.0125	1N4448		ITT+Ph+Ses+TI
	D..0005	50.04.0125	1N4448		ITT+Ph+Ses+TI
	D..0006	50.04.0125	1N4448		ITT+Ph+Ses+TI
	D..0007	50.04.0125	1N4448		ITT+Ph+Ses+TI
	D..0008	50.04.0125	1N4448		ITT+Ph+Ses+TI
	D..0009	50.04.0125	1N4448		ITT+Ph+Ses+TI
	D..0010	50.04.0125	1N4448		ITT+Ph+Ses+TI
	D..0011	50.04.0125	1N4448		ITT+Ph+Ses+TI
	D..0012	50.04.0125	1N4448		ITT+Ph+Ses+TI
	D..0013	50.04.0512	1N5818	1N5819	Mot
	D..0014	50.04.0512	1N5818	1N5819	Mot
	D..0015	50.04.1102	6.8 V Z	BZX83C 6.8, BZX55C 6.8, ZPD 6.8	ITT+Ses
	D..0016	50.04.0125	1N4448		ITT+Ph+Ses+TI
	D..0017	50.04.0125	1N4448		ITT+Ph+Ses+TI
	D..0018	50.04.0125	1N4448		ITT+Ph+Ses+TI
	D..0019	50.04.0125	1N4448		ITT+Ph+Ses+TI
	D..0020	50.04.0125	1N4448		ITT+Ph+Ses+TI
	D..0021	50.04.0125	1N4448		ITT+Ph+Ses+TI

S T U D E R (02) 83/05/26 PB CODE READ/WRITE UNIT 1.820.721.00 PAGE 2

IND.	POS.NO.	PART NO.	VALUE	SPECIFICATIONS / EQUIVALENT	MANUF.
	D..0022	50.04.0125	1N4448		ITT+Ph+Ses+TI
	D..0023	50.04.0125	1N4448		ITT+Ph+Ses+TI
(02)	D..002A	50.04.0125	1N4448		ITT+Ph+Ses+TI
	IC..0001	50.07.0003	MM74C374N		NS
	IC..0002	50.10.0107	LM78L05ACS	uA78L05AWC	Fc+NS
	IC..0003	50.09.0102	LF357P		NS
	IC..0004	50.09.0106	NE5532AN	XR5532AN, 5532ANB	Ex+Ra+Sig
	IC..0005	50.07.0004	MC14556BCP	CD4556BE	Fc+Mot+RCA
	IC..0006	50.05.0227	SN75462P	SN75472P	TI
	IC..0007	50.09.0107	RC4559NB		Ra
	IC..0008	50.06.0113	SN74LS113N	N74LS113N: DM74LS113N	NS+Sig+TI
	IC..0009	50.05.0283	LM393N	LM393P	NS+TI
	IC..0010	50.09.0106	NE5532AN	XR5532AN, 5532ANB	Ex+Ra+Sig
	IC..0011	50.05.0144	LM301AN		NS
	IC..0012	50.09.0102	LF357P		NS
	IC..0013	50.07.0016	MC14053B	CD4053BCN	Mot+NS
	IC..0014	50.05.0144	LM301AN		NS
	JS..0001			See Note 1	
	K..0001	56.04.0171	SH D1012		ITT
	L..0001	62.01.0128	1 mH	Sowanda Nr. 17-104, Delevan Nr. 1641-105	
	L..0002	62.02.2122	1.2 mH	TDK Nr. CSL 0812-122 J	
	Q..0001	50.03.0436	BC237B	BC547B, BC550B	ITT+Mot+Ph+Siw+Tf
	Q..0002	50.03.0497	BC550		Sie
	Q..0003	50.03.0329	P1228E	WP 146	TS+Sx
	Q..0004	50.03.0436	BC237B	BC547B, BC550B	ITT+Mot+Ph+Siw+Tf
	Q..0005	50.03.0496	BC560B		Mot+Ph+Siw+Tf
	Q..0006	50.03.0496	BC560B		Mot+Ph+Siw+Tf
	Q..0007	50.03.0496	BC560B		Mot+Ph+Siw+Tf
	Q..0008	50.03.0350	J112F-18	J112A, TM0062	NS+Mot
	Q..0009	50.03.0329	P1228E	WP 146	TS+Sx
	Q..0010	50.03.0350	J112F-18	J112A, TM0062	NS+Mot
	Q..0011	50.03.0496	BC560B		Mot+Ph+Siw+Tf

S T U D E R (02) 83/05/26 PB CODE READ/WRITE UNIT 1.820.721.00 PAGE 3

IND.	POS.NO.	PART NO.	VALUE	SPECIFICATIONS / EQUIVALENT	MANUF.
	Q..0012	50.03.0496	BC560B		Mot+Ph+Siw+Tf
	Q..0013	50.03.0329	P1228E	WP 146	TS+Sx
	Q..0014	50.03.0329	P1228E	WP 146	TS+Sx
	Q..0015	50.03.0350	J112F-18	J112A, TM0062	NS+Mot
	R..0001	57.11.4471	470 Ohm	2%	
	R..0002	57.11.4331	330 Ohm	2%	
	R..0003	57.11.4103	10 kOhm	2%	
	R..0004	58.11.4203	20 kOhm	See note 2	
	R..0005	57.11.4562	5.6 kOhm	2%	
	R..0006	57.11.4562	5.6 kOhm	2%	
	R..0007	58.11.4203	20 kOhm	See note 2	
	R..0008	57.11.4101	100 Ohm	2%	
	R..0009	57.11.4103	10 kOhm	2%	
	R..0010	57.11.4105	1 MOhm	2%	
	R..0011	57.11.4102	1 kOhm	2%	
	R..0012	57.11.4105	1 MOhm	2%	
	R..0013	57.11.4393	39 kOhm	2%	
	R..0014	57.11.4102	1 kOhm	2%	
	R..0015	58.11.4203	20 kOhm	See note 2	
	R..0016	57.11.4105	1 MOhm	2%	
	R..0017	57.11.4152	1.5 kOhm	2%	
	R..0018	57.11.4181	180 Ohm	2%	
	R..0019	57.11.4102	1 kOhm	2%	
	R..0020	57.99.8209	5.6 Ohm	PTC Resistor, Philips Nr. 2322 662 91005	
	R..0021	57.11.4472	4.7 kOhm	1%	
	R..0022	57.11.3472	4.7 kOhm	1%	
	R..0023	57.11.4103	10 kOhm	2%	
	R..0024	57.11.4474	470 kOhm	2%	
	R..0025	57.11.4103	10 kOhm	2%	
	R..0026	57.11.4104	100 kOhm	2%	
	R..0027	57.11.4153	15 kOhm	2%	
	R..0028	57.11.4472	4.7 kOhm	2%	
	R..0029	58.11.4105	1 MOhm	See note 3	
	R..0030	57.11.4473	47 kOhm	2%	
	R..0031	57.11.4102	1 kOhm	1%	
	R..0032	57.11.4104	100 kOhm	2%	

S T U D E R (02) 83/05/26 PB CODE READ/WRITE UNIT 1.820.721.00 PAGE 4

IND.	POS.NO.	PART NO.	VALUE	SPECIFICATIONS / EQUIVALENT	MANUF.
	R..0033	57.11.4102	1 kOhm	2%	
	R..0034	57.11.4222	2.2 kOhm	2%	
	R..0035	57.11.4124	120 kOhm	2%	
	R..0036	57.11.4153	15 kOhm	2%	
	R..0037	57.11.4223	22 kOhm	2%	
	R..0038	57.11.3102	1 kOhm	1%	
	R..0039	57.11.4103	10 kOhm	2%	
	R..0040	57.11.3754	750 kOhm	1%	
	R..0041	57.11.4332	3.3 kOhm	2%	
	R..0042	57.11.6106	10 MOhm	10%	
	R..0043	57.11.4471	470 Ohm	2%	
	R..0044	57.11.3102	1 kOhm	1%	
(00)	R..0045	57.11.4104	100 kOhm	2%	
(01)	R..0045	57.11.4333	33 kOhm	2%	
	R..0046	57.11.3104	100 kOhm	1%	
	R..0047	57.11.4103	10 kOhm	2%	
	R..0048	57.11.3112	1.1 kOhm	1%	
	R..0049	57.11.4101	100 Ohm	2%	
	R..0050	57.11.4122	1.2 kOhm	2%	
	R..0051	57.11.4102	1 kOhm	2%	
	R..0052	57.11.3244	240 kOhm	1%	
	R..0053	57.11.3104	100 kOhm	1%	
	R..0054	57.11.4103	10 kOhm	2%	
	R..0055	57.11.4393	39 kOhm	2%	
	R..0056	57.11.4152	1.5 kOhm	2%	
	R..0057	57.11.3112	1.1 kOhm	1%	
	R..0058	57.11.3104	100 kOhm	1%	
	R..0059	57.11.3362	3.6 kOhm	1%	
	R..0060	57.11.4561	560 Ohm	2%	
	R..0061	57.11.4103	10 kOhm	2%	
	R..0062	57.11.4222	2.2 kOhm	2%	
	R..0063	57.11.3202	2 kOhm	1%	
	R..0064	57.11.4272	2.7 kOhm	2%	
	R..0065	57.11.4333	33 kOhm	2%	
	R..0066	57.11.4105	1 MOhm	2%	
	R..0067	57.11.3102	1 kOhm	1%	
	R..0068	57.11.6106	10 MOhm	10%	

S T U D E R (02) 83/05/26 PB CODE READ/WRITE UNIT 1.820.721.00 PAGE 5

IND.	POS.NO.	PART NO.	VALUE	SPECIFICATIONS / EQUIVALENT	MANUF.
	R..0069	57.11.4103	10 kOhm	2%	
	R..0070	57.11.4123	12 kOhm	2%	
	R..0071	57.11.4103	10 kOhm	2%	
	R..0072	57.11.4104	100 kOhm	2%	
	R..0073	57.11.4104	100 kOhm	2%	
	R..0074	57.11.4222	2.2 kOhm	2%	
	R..0075	57.11.4103	10 kOhm	2%	
	R..0076	57.11.4104	100 kOhm	2%	
	R..0077	57.11.4472	4.7 kOhm	2%	
	R..0078	57.11.4392	3.9 kOhm	2%	
	R..0079	57.11.4472	4.7 kOhm	2%	
	R..0080	57.11.6106	10 MOhm	10%	
	R..0081	57.11.4472	4.7 kOhm	2%	
	R..0082	57.11.4472	4.7 kOhm	2%	
	R..0083	57.11.4103	10 kOhm	2%	
	R..0084	57.11.3362	3.6 kOhm	1%	
	R..0085	57.11.4103	10 kOhm	2%	
	R..0086	57.11.6106	10 MOhm	10%	
	R..0087	57.11.3132	1.3 kOhm	2%	
	R..0088	57.11.4103	10 kOhm	2%	
	R..0089	57.11.4183	18 kOhm	2%	
	R..0090	57.11.4103	10 kOhm	2%	
	R..0091	57.11.4150	15 Ohm	2%	
	R..0092	57.11.4105	1 MOhm	2%	
	R..0093	57.11.4392	3.9 kOhm	2%	
	R..0094	57.11.4102	1 kOhm	2%	
	R..0095	57.11.4392	3.9 kOhm	2%	
	R..0096	57.11.4392	3.9 kOhm	2%	
	R..0097	57.11.4101	100 Ohm	2%	
	R..0098	57.11.3821	820 Ohm	1%	
	R..0099	57.11.4102	1 kOhm	2%	
	R..0100	57.11.4104	100 kOhm	2%	
	R..0101	57.11.4104	100 kOhm	2%	
	R..0102	57.11.4682	6.8 kOhm	2%	
	R..0103	57.11.4102	1 kOhm	2%	
	R..0104	57.11.4105	1 MOhm	2%	
	R..0105	57.11.6106	10 MOhm	10%	

S T U D E R (02) 83/05/26 PB CODE READ/WRITE UNIT 1.820.721.00 PAGE 6

IND.	POS.NO.	PART NO.	VALUE	SPECIFICATIONS / EQUIVALENT	MANUF.
	T..0001	1.022.218.00		Input transformer, 1 : 1	St
	T..0002	1.022.215.00		Time code output transformer	St
	T..0003	1.022.221.00		Time code HF transformer	St

(01) 83/03/11 improved suppression of interferency on line input.

(02) 83/05/26 delay of bias and erase current in drop-in mode because of bounce time of relay.

Note 1: Contact pin: Studer Nr. 54.01.0020
Berg Nr. 75 140-102-36
Philips Nr. 2422 025 09303
Bridge: Studer Nr. 54.01.0021
Berg Nr. 69 474-001
AMP Nr. 141 767-1
Philips Nr. 2422 024 88003

Note 2: Potentiometer, linear, Bourns Nr. 3329 H - 1 - 203
VRN Nr. 170 - 20k

Note 3: Potentiometer, linear, Bourns Nr. 3329 H - 1 - 105
VRN Nr. 170 - 1M

Ce=Ceramic, Sal=Solid Aluminium

MANUFACTURER: Ex=Exar, Fc=Fairchild, GI=General Instruments,
ITT=Intermetall, Mot=Motorola, Ni=National Semicond.,
Ph=Philips, Ra=Raytheon, RCA=Radio Corp. of America,
Ses=Sescosem, Sie=Siemens, Sig=Signetics, St=Studer,
Sx=Siliconix, TS=Teledyne Semiconductors, Tf=Telefunken,
TI=Texas Instruments

ORIG 82/09/22 (01) 83/03/11 (02) 83/05/26

S T U D E R (02) 83/05/26 PB CODE READ/WRITE UNIT 1.820.721.00 PAGE 7

TIME CODE READ/WRITE UNIT PCB 1.820.721–81 GR20 EL6 "ESE"

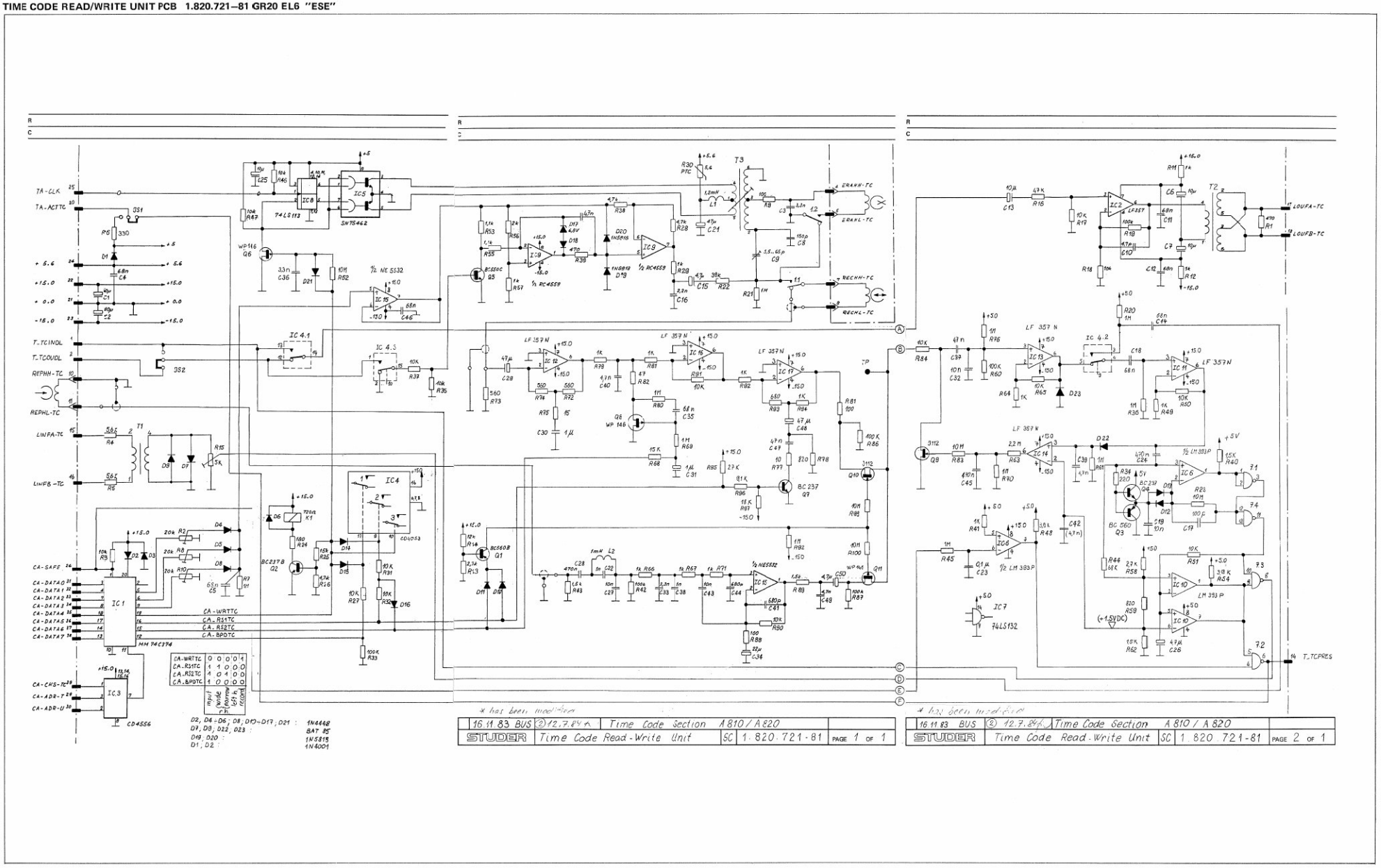

TIME CODE READ/WRITE UNIT PCB 1.820.721–81 GR20 EL6 "ESE"

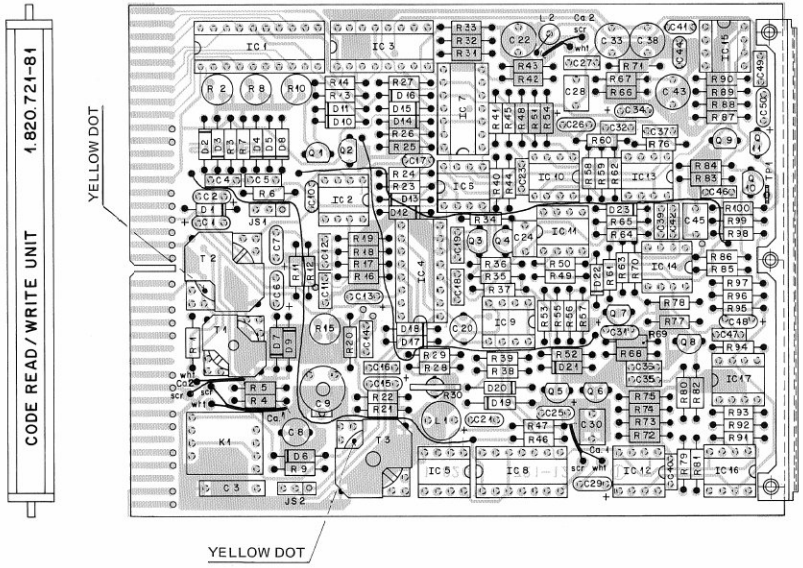

IND.	POS.NO.	PART NO.	VALUE	SPECIFICATIONS / EQUIVALENT	MANUF.
	C.....1	59.2b.2100	10 uF	20%, 16V, Sal	Ph
	C.....2	59.2b.2100	10 uF	20%, 16V, Sal	Ph
	C.....3	59.11.6332	3.3 nF	5%	
	C.....4	59.99.0205	68 nF	-20%, Ce	
	C.....5	59.99.0205	68 nF	-20%, Ce	
	C.....6	59.2b.2100	10 uF	20%, 16V, Sal	Ph
	C.....7	59.2b.2100	10 uF	20%, 16V, Sal	Ph
	C.....8	59.05.2151	150 pF	2.5%	
	C.....9	59.18.0102	65 pF	Trimmer Capacitor, Philips Nr 2222 808 01001	
	C.....10	59.34.0479	4.7 pF	10%, Ce	
	C.....11	59.99.0205	68 nF	-20%, Ce	
	C.....12	59.99.0205	68 nF	-20%, Ce	
	C.....13	59.2b.2100	10 uF	20%, 16V, Sal	Ph
	C.....14	59.06.0683	68 nF	10%	
	C.....15	59.2b.5479	4.7 uF	20%, 25V, Sal	Ph
	C.....16	59.06.0222	2.2 nF	10%	
	C.....17	59.34.4101	100 pF	5%, Ce	
	C.....18	59.06.0683	68 nF	10%	
	C.....19	59.06.0103	10 nF	10%	
	C.....20	59.05.2472	4.7 nF	2.5%	
	C.....21	59.2b.0470	47 uF	20%, 6.3V, Sal	Ph
	C.....22	59.05.1102	1 nF	1%	
	C.....23	59.06.0104	0.1 uF	10%	
	C.....24	59.06.0474	0.47 uF	10%	
	C.....25	59.2b.2100	10 uF	20%, 16V, Sal	Ph
	C.....26	59.2b.5479	4.7 uF	20%, 25V, Sal	Ph
	C.....27	59.06.0103	10 nF	10%	
	C.....28	59.06.0474	0.47 uF	10%	
	C.....29	59.2b.0470	47 uF	20%, 6.3V, Sal	Ph
	C.....30	59.06.5105	1 uF	5%	
	C.....31	59.2b.9109	1 uF	20%, 40V, Sal	Ph
	C.....32	59.06.0103	10 nF	10%	
	C.....33	59.05.1332	3.3 nF	1%	
	C.....34	59.2b.1220	22 uF	20%, 10V, Sal	Ph
	C.....35	59.06.0683	68 nF	10%	
	C.....36	59.06.0332	3.3 nF	10%	
	C.....37	59.06.0473	47 nF	10%	

S T U D E R (02) 84/07/12 LN CODE READ/WRITE UNIT 1.820.721.81 PAGE 1

IND.	POS.NO.	PART NO.	VALUE	SPECIFICATIONS / EQUIVALENT	MANUF.
	C.....38	59.05.1102	1 nF	1%	
	C.....39	59.06.0472	4.7 nF	10%	
	C.....40	59.06.0472	4.7 nF	10%	
	C.....41	59.34.4151	150 pF	5%, Ce	
	C.....42	59.06.0472	4.7 nF	10%	
	C.....43	59.05.1103	10 nF	1%	
	C.....44	59.32.2681	680 pF	10%, Ce	
	C.....45	59.06.0476	0.47 uF	10%	
	C.....46	59.99.0205	68 nF	-20%, Ce	
	C.....47	59.06.0473	47 nF	10%	
	C.....48	59.26.0470	47 uF	20%, 6.3V, Sal	Ph
	C.....49	59.06.0472	4.7 nF	10%	
	C.....50	59.26.5479	4.7 uF	20%, 25V, Sal	Ph
	D.....1	50.04.0122	1N4001	1N4002, 1N4003, 1N4004	Mot,GI,Sol
	D.....2	50.04.0125	1N4448	1N4002, 1N4003, 1N4004	Fc,ITT,Ph,Ses
	D.....3	50.04.0122	1N4001	1N4002, 1N4003, 1N4004	Mot,GI,Sol
	D.....4	50.04.0125	1N4448		Fc,ITT,Ph,Ses
	D.....5	50.04.0125	1N4448		Fc,ITT,Ph,Ses
	D.....6	50.04.0125	1N4448		Fc,ITT,Ph,Ses
	D.....7	50.04.0127	BAT 85	BAS 40-02	Ph,Sie
	D.....8	50.04.0125	1N4448		Fc,ITT,Ph,Ses
	D.....9	50.04.0127	BAT 85	BAS 40-02	Ph,Sie
	D.....10	50.04.0125	1N4448		Fc,ITT,Ph,Ses
	D.....11	50.04.0125	1N4448		Fc,ITT,Ph,Ses
	D.....12	50.04.0125	1N4448		Fc,ITT,Ph,Ses
	D.....13	50.04.0125	1N4448		Fc,ITT,Ph,Ses
	D.....14	50.04.0125	1N4448		Fc,ITT,Ph,Ses
	D.....15	50.04.0125	1N4448		Fc,ITT,Ph,Ses
	D.....16	50.04.0125	1N4448		Fc,ITT,Ph,Ses
	D.....17	50.04.0125	1N4448		Fc,ITT,Ph,Ses
	D.....18	50.04.1102	6.8 V	Z BZX83C 6.8, ZPD 6.8	Ses,ITT
	D.....19	50.04.0512	1N5818	1N5819	Mot
	D.....20	50.04.0512	1N5818	1N5819	Mot
	D.....21	50.04.0125	1N4448		Fc,ITT,Ph,Ses
	D.....22	50.04.0127	BAT 85	BAS 40-02	Ph,Sie
	D.....23	50.04.0127	BAT 85	BAS 40-02	Ph,Sie

S T U D E R (02) 84/07/12 LN CODE READ/WRITE UNIT 1.820.721.81 PAGE 2

IND.	POS.NO.	PART NO.	VALUE	SPECIFICATIONS / EQUIVALENT	MANUF.
	IC.....1	50.07.3003	MM74C374N		NSC
	IC.....2	50.09.0110	LF357BN	Slew rate >30V/lus	NSC
	IC.....3	50.07.2004	MC14556C	PCD4556BE, 4556BPC	Fc,Mot,RCA
	IC.....4	50.07.3015	MC140538	CD4053BCN	Mot,NSC
	IC.....5	50.05.3227	SN75462P	SN75472P, SN75462JG	TI
	IC.....6	50.05.3283	LM393N	LM393	NSC,TI
	IC.....7	50.06.0132	SN74LS132	NN74LS132N	Tf,Sig
	IC.....8	50.06.0113	SN74LS113	NN74LS113N, DM74LS113N	TI,Sig,NSC
	IC.....9	50.09.0107	RC4559ND		Ra
	IC.....10	50.05.0283	LM393N	LM393	NSC,TI
	IC.....11	50.09.0110	LF357BN	Slew rate >30V/lus	NSC
	IC.....12	50.09.0110	LF357BN	Slew rate >30V/lus	NSC
	IC.....13	50.09.0110	LF357BN	Slew rate >30V/lus	NSC
	IC.....14	50.09.0110	LF357BN	Slew rate >30V/lus	NSC
	IC.....15	50.09.0106	NE5532AN	X05532A, 5532AN8	Sig,Ex,Ra
	IC.....16	50.09.0110	LF357BN	Slew rate >30V/lus	NSC
	IC.....17	50.09.0110	LF357BN	Slew rate >30V/lus	NSC
	J.....1			See Note 1	
	J.....2			See Note 1	
	K.....1	56.04.0171	SM 01012		ITT
	L.....1	62.02.2122	1.2 mH	TOK Nr. CSL 0812-122 J	
	L.....2	62.01.0128	1 mH	Gowanda Nr. 17-104, Delevan Nr. 1641-105	
	Q.....1	50.03.0496		BC560 E t328	Sie
	Q.....2	50.03.0436	BC237B	BC547B, BC550B	ITT,Mot,Ph,Sie
	Q.....3	50.03.0496		BC560 E t328	Sie
	Q.....4	50.03.0436	BC237B	BC547B, BC550B	ITT,Mot,Ph,Sie
	Q.....5	50.03.0497		BC550 E t328	Sie
	Q.....6	50.03.0329	WP 146		Sx
	Q.....7	50.03.0436	BC237B	BC547B, BC550B	ITT,Mot,Ph,Sie
	Q.....8	50.03.0329	WP 146		Sx
(00)	Q.....9	50.03.0329	WP 146		Sx
(01)	Q.....9	50.03.0350	J112F	J112, TM0062	Sc,NS,Mot
	Q.....10	50.03.0350	J112F	J112, TM0062	Sc,NS,Mot

S T U D E R (02) 84/07/12 LN CODE READ/WRITE UNIT 1.820.721.81 PAGE 3

IND.	POS.NO.	PART NO.	VALUE	SPECIFICATIONS / EQUIVALENT	MANUF.
(00)	Q.....11	50.03.0350	J112F	J112, TM0062	Sc,NS,Mot
(01)	Q.....11	50.03.0329	WP 146		Sx
	R.....1	57.11.4471	470 Ohm	2%	
	R.....2	58.11.6203	20 kOhm	See Note 2	
	R.....3	57.11.4103	10 kOhm	2%	
	R.....4	57.11.4562	5.6 kOhm	2%	
	R.....5	57.11.4562	5.6 kOhm	2%	
	R.....6	57.11.4331	330 Ohm	2%	
	R.....7	57.11.4105	1 MOhm	2%	
	R.....8	58.11.6203	20 kOhm	See Note 2	
	R.....9	57.11.4101	100 Ohm	2%	
	R.....10	58.11.6203	20 kOhm	See Note 2	
	R.....11	57.11.4102	1 kOhm	2%	
	R.....12	57.11.4102	1 kOhm	2%	
	R.....13	57.11.4272	2.7 kOhm	2%	
	R.....14	57.11.4123	12 kOhm	2%	
	R.....15	58.11.6502	5 kOhm	See Note 3	
	R.....16	57.11.4473	47 kOhm	2%	
	R.....17	57.11.4103	10 kOhm	2%	
	R.....18	57.11.4103	10 kOhm	2%	
	R.....19	57.11.4104	100 kOhm	2%	
	R.....20	57.11.4105	1 MOhm	2%	
	R.....21	57.11.4105	1 MOhm	2%	
	R.....22	57.11.4393	39 kOhm	2%	
	R.....23	57.11.5106	10 MOhm	5%	
	R.....24	57.11.4181	180 Ohm	2%	
	R.....25	57.11.4153	15 kOhm	2%	
	R.....26	57.11.4472	4.7 kOhm	2%	
	R.....27	57.11.4103	10 kOhm	2%	
	R.....28	57.11.4472	4.7 kOhm	1%	
	R.....29	57.11.3102	1 kOhm	1%	
	R.....30	57.99.3209	5.6 Ohm	PTC Resistor, Philips Nr. 2322 662 91005	
	R.....31	57.11.4103	10 kOhm	2%	
	R.....32	57.11.4103	10 kOhm	2%	
	R.....33	57.11.4104	100 kOhm	2%	
	R.....34	57.11.4221	220 Ohm	2%	

S T U D E R (02) 84/07/12 LN CODE READ/WRITE UNIT 1.820.721.81 PAGE 4

NO.	POS.NO.	PART NO.	VALUE	SPECIFICATIONS / EQUIVALENT	MANUF.
(00)	R.....35	57.11.4332	3.3 kOhm	2%	
(02)	R.....35	57.11.4103	10 kOhm	2%	
	R.....36	57.11.4105	1 MOhm	2%	
	R.....37	57.11.4103	10 kOhm	2%	
	R.....38	57.11.3472	4.7 kOhm	1%	
	R.....39	57.11.4471	470 Ohm	2%	
	R.....40	57.11.4152	1.5 kOhm	2%	
	R.....41	57.11.4102	1 kOhm	2%	
	R.....42	57.11.4104	100 kOhm	2%	
	R.....43	57.11.4152	1.5 kOhm	2%	
	R.....44	57.11.4683	68 kOhm	2%	
	R.....45	57.11.4105	1 MOhm	2%	
	R.....46	57.11.4103	10 kOhm	2%	
	R.....47	57.11.4103	10 kOhm	2%	
	R.....48	57.11.4392	3.9 kOhm	2%	
	R.....49	57.11.4102	1 kOhm	2%	
	R.....50	57.11.4103	10 kOhm	2%	
	R.....51	57.11.4103	10 kOhm	2%	
	R.....52	57.11.5106	10 MOhm	5%	
	R.....53	57.11.3112	1.1 kOhm	1%	
	R.....54	57.11.4392	3.9 kOhm	2%	
	R.....55	57.11.3112	1.1 kOhm	1%	
	R.....56	57.11.3202	2 kOhm	1%	
	R.....57	57.11.3102	1 kOhm	1%	
	R.....58	57.11.3272	2.7 kOhm	1%	
	R.....59	57.11.3821	820 Ohm	1%	
	R.....60	57.11.4104	100 kOhm	2%	
	R.....61	57.11.4105	1 MOhm	2%	
	R.....62	57.11.3152	1.5 kOhm	1%	
	R.....63	57.11.4105	1 MOhm	2%	
	R.....64	57.11.4102	1 kOhm	2%	
	R.....65	57.11.4103	10 kOhm	2%	
	R.....66	57.11.3102	1 kOhm	1%	
	R.....67	57.11.3102	1 kOhm	1%	
	R.....68	57.11.4153	15 kOhm	2%	
	R.....69	57.11.4105	1 MOhm	2%	
	R.....70	57.11.5225	2.2 MOhm	5%	

S T U D E R (02) 84/07/12 LN CODE READ/WRITE UNIT 1.820.721.81 PAGE 5

NO.	POS.NO.	PART NO.	VALUE	SPECIFICATIONS / EQUIVALENT	MANUF.
	R.....71	57.11.4102	1 kOhm	2%	
	R.....72	57.11.4561	560 Ohm	2%	
	R.....73	57.11.4561	560 Ohm	2%	
	R.....74	57.11.4561	560 Ohm	2%	
	R.....75	57.11.4150	15 Ohm	2%	
	R.....76	57.11.4105	1 MOhm	2%	
	R.....77	57.11.4100	10 Ohm	2%	
	R.....78	57.11.4821	820 Ohm	2%	
	R.....79	57.11.4102	1 kOhm	2%	
	R.....80	57.11.4105	1 MOhm	2%	
	R.....81	57.11.4102	1 kOhm	2%	
	R.....82	57.11.4470	47 Ohm	2%	
	R.....83	57.11.5106	10 MOhm	5%	
	R.....84	57.11.4103	10 kOhm	2%	
	R.....85	57.11.4101	100 Ohm	2%	
	R.....86	57.11.4104	100 kOhm	2%	
	R.....87	57.11.4104	100 kOhm	2%	
	R.....88	57.11.4101	100 Ohm	2%	
	R.....89	57.11.4152	1.5 kOhm	2%	
	R.....90	57.11.4103	10 kOhm	2%	
	R.....91	57.11.4103	10 kOhm	2%	
	R.....92	57.11.4102	1 kOhm	2%	
	R.....93	57.11.4681	680 Ohm	2%	
	R.....94	57.11.4102	1 kOhm	2%	
	R.....95	57.11.4273	27 kOhm	2%	
	R.....96	57.11.3912	9.1 kOhm	1%	
	R.....97	57.11.4183	18 kOhm	2%	
	R.....98	57.11.4105	1 MOhm	2%	
	R.....99	57.11.5106	10 MOhm	5%	
	R.....100	57.11.5106	10 MOhm	5%	
	T.....1	1.022.218.00		Input Transformer 1:1	St
	T.....2	1.022.215.00		Time Code Output Transformer	St
	T.....3	1.022.221.00		Time Code HF Transformer	St

S T U D E R (02) 84/07/12 LN CODE READ/WRITE UNIT 1.820.721.81 PAGE 6

IND.	POS.NO.	PART NO.	VALUE	SPECIFICATIONS / EQUIVALENT	MANUF.

(01) 83.12.09 Correction: Changed by mistake Q 9 and Q 11.

(02) 84.07.12 Improved switching performance of Q 5.

Note 1: Contact pin: Studer Nr. 54.01.0020
Berg Nr. TS 160-102-36
Philips Nr. 2422 025 09303
Bridge: Studer Nr. 54.01.0021
Cannatel Nr. 313.1363.000 408
Philips Nr. 2422 024 88003

Note 2: Potentiometer, linear, Bourns Nr. 3329 H - 1 - 203
VRN Nr. 170 - 20k
Lesa Nr. 170 - 20k

Note 3: Potentiometer, linear, Bourns Nr. 3329 H - 1 - 502
VRN Nr. 170 - 5k
Lesa Nr. 170 - 5k

Ce=Ceramic, Sal=Solid Aluminium

MANUFACTURER: Ex=Exar, Fc=Fairchild, GI=General Instruments,
ITT=Intermetall, Mot=Motorola, NS=National Semicond.,
Ph=Philips, Ra=Raytheon, RCA=Radio Corp. of America,
Ses=Sescosem, Sie=Siemens, Sig=Signetics, St=Studer,
Sx=Siliconix, TS=Teledyne Semiconductors, Tf=Telefunken,
TI=Texas Instruments

DRIG 83/11/16 (01) 83/12/09 (02) 84/07/12

S T U D E R (02) 84/07/12 LN CODE READ/WRITE UNIT 1.820.721.81 PAGE 7

TIME CODE READ/WRITE UNIT PCB 1.820.721–82 GR20 EL6 "ESE"

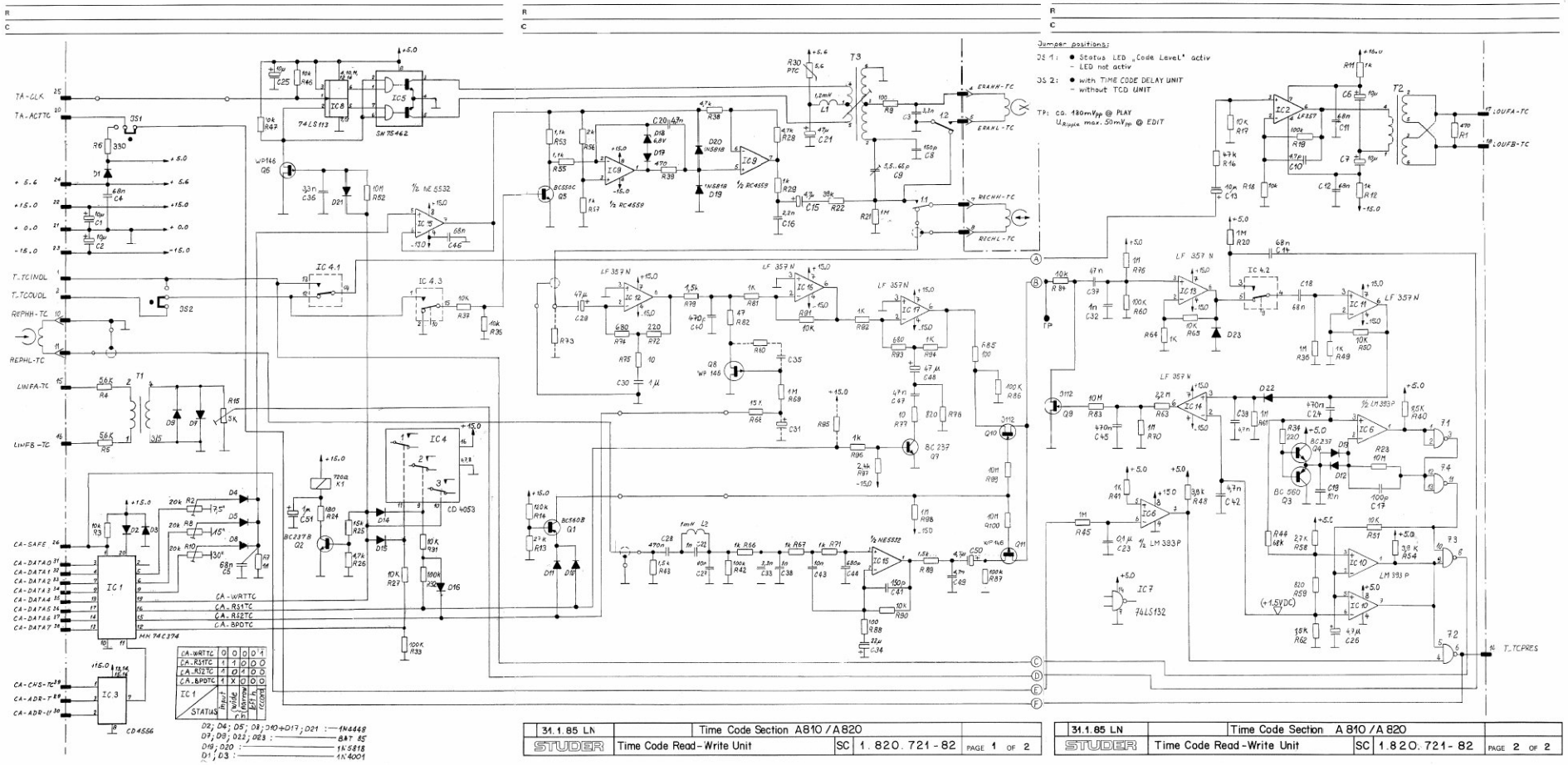

31.1.85 LN	Time Code Section A810 / A820			
STUDER	Time Code Read-Write Unit	SC	1.820.721-82	PAGE 1 OF 2

31.1.85 LN	Time Code Section A 810 / A 820			
STUDER	Time Code Read-Write Unit	SC	1.820.721-82	PAGE 2 OF 2

TIME CODE READ/WRITE UNIT PCB 1.820.721–82 GR20 EL6 "ESE"

COMPONENT SIDE

CODE READ/WRITE UNIT 1.820.721-82

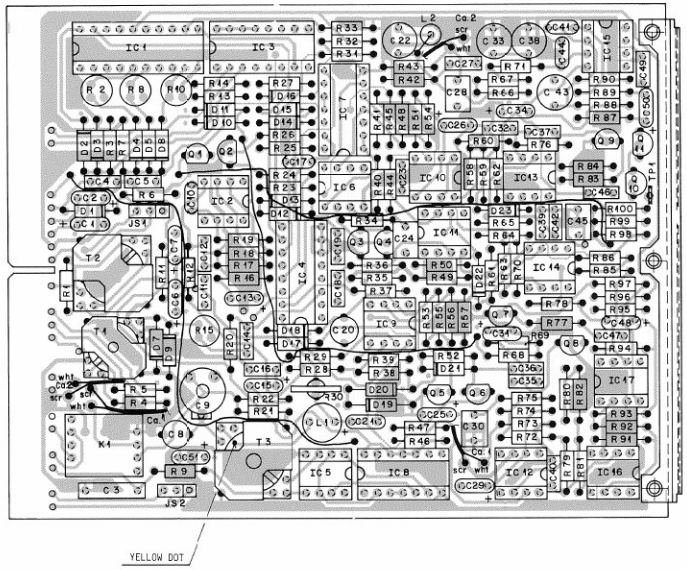

IND.	POS.NO.	PART NO.	VALUE	SPECIFICATIONS / EQUIVALENT	MANUF.
	C.....1	59.26.2100	10 uF	20%, 1kV, Sal	Ph
	C.....2	59.26.2100	10 uF	20%, 1kV, Sal	Ph
	C.....3	59.11.6332	3.3 nF	5%	
	C.....4	59.99.0205	68 nF	-20%+ Ce	
	C.....5	59.99.0205	68 nF	-20%+ Ce	
	C.....6	59.26.2100	10 uF	20%, 1kV, Sal	Ph
	C.....7	59.26.2100	10 uF	20%, 1kV, Sal	Ph
	C.....8	59.05.2151	150 pF	2.5%	
	C.....9	59.18.0102	65 pF	Trimmer Capacitor, Philips Nr 2222 808 01001	
	C.....10	59.34.0479	4.7 pF	10%+ Ce	
	C.....11	59.99.0205	68 nF	-20%+ Ce	
	C.....12	59.99.0205	68 nF	-20%+ Ce	
	C.....13	59.26.2100	10 uF	20%, 1kV, Sal	Ph
	C.....14	59.06.0683	68 nF	10%	
	C.....15	59.26.5479	4.7 uF	20%, 25V, Sal	Ph
	C.....16	59.06.0222	2.2 nF	10%	
	C.....17	59.34.4101	100 pF	5%+ Ce	
	C.....18	59.06.0683	68 nF	10%	
	C.....19	59.06.0103	10 nF	10%	
	C.....20	59.05.2472	4.7 nF	2.5%	
	C.....21	59.26.0470	47 uF	20%, 6.3V, Sal	Ph
	C.....22	59.05.1102	1 nF	1%	
	C.....23	59.06.0104	100 nF	10%	
	C.....24	59.06.0474	470 nF	10%	
	C.....25	59.26.2100	10 uF	20%, 1kV, Sal	Ph
	C.....26	59.26.5479	4.7 uF	20%, 25V, Sal	Ph
	C.....27	59.06.0103	10 nF	10%	
	C.....28	59.06.0474	470 nF	10%	
	C.....29	59.26.0470	47 uF	20%, 6.3V, Sal	Ph
	C.....30	59.06.5105	1 uF	5%	
	C.....31		not used		
	C.....32	59.06.5102	1 nF	10%	
	C.....33	59.05.1332	3.3 nF	1%	
	C.....34	59.26.1220	22 uF	20%, 18V, Sal	Ph
	C.....35		not used		
	C.....36	59.06.0332	3.3 nF	10%	
	C.....37	59.06.0473	47 nF	10%	

S T U D E R (00) 85/01/31 LN CODE READ/WRITE UNIT 1.820.721.82 PAGE 1

IND.	POS.NO.	PART NO.	VALUE	SPECIFICATIONS / EQUIVALENT	MANUF.
	C.....38	59.05.1102	1 nF	1%	
	C.....39	59.06.0472	4.7 nF	10%	
	C.....40	59.32.2471	470 pF	10%	
	C.....41	59.34.4151	150 pF	5%+ Ce	
	C.....42	59.06.0472	4.7 nF	10%	
	C.....43	59.05.1103	10 nF	1%	
	C.....44	59.32.2681	680 pF	10%+ Ce	
	C.....45	59.06.0474	470 nF	10%	
	C.....46	59.99.0205	68 nF	-20%+ Ce	
	C.....47	59.06.0473	47 nF	10%	
	C.....48	59.26.0470	47 uF	20%, 6.3V, Sal	Ph
	C.....49	59.06.0472	4.7 nF	10%	
	C.....50	59.26.5479	4.7 uF	20%, 25V, Sal	Ph
	C.....51	59.26.4109	1 uF	20%, 40V, Sal	
	D.....1	50.04.0122	1N4001	1N4002, 1N4003, 1N4004	Mot,GI,Sol
	D.....2	50.04.0125	1N4448		Fc,ITT,Ph,Ses
	D.....3	50.04.0122	1N4001	1N4002, 1N4003, 1N4004	Mot,GI,Sol
	D.....4	50.04.0125	1N4448		Fc,ITT,Ph,Ses
	D.....5	50.04.0125	1N4448		Fc,ITT,Ph,Ses
	D.....7	50.04.0127	BAT 85	BAS 40-02	Ph,Sie
	D.....8	50.04.0125	1N4448		Fc,ITT,Ph,Ses
	D.....9	50.04.0127	BAT 85	BAS 40-02	Ph,Sie
	D.....10	50.04.0125	1N4448		Fc,ITT,Ph,Ses
	D.....11	50.04.0125	1N4448		Fc,ITT,Ph,Ses
	D.....12	50.04.0125	1N4448		Fc,ITT,Ph,Ses
	D.....13	50.04.0125	1N4448		Fc,ITT,Ph,Ses
	D.....14	50.04.0125	1N4448		Fc,ITT,Ph,Ses
	D.....15	50.04.0125	1N4448		Fc,ITT,Ph,Ses
	D.....16	50.04.0125	1N4448		Fc,ITT,Ph,Ses
	D.....17	50.04.0125	1N4448		Fc,ITT,Ph,Ses
	D.....18	50.04.1102	6.8 V Z	BZX83C 6.8, ZPD 6.8	Ses,ITT
	D.....19	50.04.0512	1N5818	1N5819	Mot
	D.....20	50.04.0512	1N5818	1N5819	Mot
	D.....21	50.04.0125	1N4448		Fc,ITT,Ph,Ses
	D.....22	50.04.0127	BAT 85	BAS 40-02	Ph,Sie

S T U D E R (00) 85/01/31 LN CODE READ/WRITE UNIT 1.820.721.82 PAGE 2

IND.	POS.NO.	PART NO.	VALUE	SPECIFICATIONS / EQUIVALENT	MANUF.
	D.....23	50.04.0127	BAT 85	BAS 40-02	Ph,Sie
	IC.....1	50.07.0003	MM74C374N		NSC
	IC.....2	50.09.0110	LF357BN	Slew rate >30V/µs	NSC
	IC.....3	50.07.0004	MC145568C	PC84556BC, 4556BPC	Fc,Mot,RCA
	IC.....4	50.07.0015	MC140538	CD4053BCN	Mot,NSC
	IC.....5	50.05.0227	SN74662F	SN75472F, SN74662JG	TI
	IC.....6	50.05.0283	LM393N	LM393	NSC,TI
	IC.....7	50.06.0132	SN74LS132	NN74LS132N	TI,Sig
	IC.....8	50.06.0113	SN74LS113	NN74LS113N, DM74LS113N	TI,Sig,NSC
	IC.....9	50.09.0107	RC4559NB		Ra
	IC.....10	50.05.0283	LM393N	LM393	NSC,TI
	IC.....11	50.09.0110	LF357BN	Slew rate >30V/µs	NSC
	IC.....12	50.09.0110	LF357BN	Slew rate >30V/µs	NSC
	IC.....13	50.09.0110	LF357BN	Slew rate >30V/µs	NSC
	IC.....14	50.09.0110	LF357BN	Slew rate >30V/µs	NSC
	IC.....15	50.09.0106	NE5532AN	XR5532AN, 5532ANB	Sig,Exa,Ra
	IC.....16	50.09.0110	LF357BN	Slew rate >30V/µs	NSC
	IC.....17	50.09.0110	LF357BN	Slew rate >30V/µs	NSC
	JS.....1			See Note 1	
	JS.....2			See Note 1	
	K.....1	56.04.0171	SM D1012		ITT
	L.....1	62.02.2122	1.2 mH	TOI Nr. LSL 0812-122 J	
	L.....2	62.01.0128	1 mH	Gowanda Nr. 17-104, Delevan Nr. 1641-105	
	Q.....1	50.03.0496		BC160 E x328	Sie
	Q.....2	50.03.0436	BC237B	BC547B, BC550B	ITT,Mot,Ph,Sie
	Q.....3	50.03.0496		BC160 E x328	Sie
	Q.....4	50.03.0436	BC237B	BC547B, BC550B	ITT,Mot,Ph,Sie
	Q.....5	50.03.0497		BC550 E x328	Sie
	Q.....6	50.03.0329	WP 146		Sx
	Q.....7	50.03.0436	BC237B	BC547B, BC550B	ITT,Mot,Ph,Sie
	Q.....8	50.03.0329	WP 146		Sx
	Q.....9	50.03.0350	J112F	J112, TM00062	Sc,NS,Mot

S T U D E R (00) 85/01/31 LN CODE READ/WRITE UNIT 1.820.721.82 PAGE 3

IND.	POS.NO.	PART NO.	VALUE	SPECIFICATIONS / EQUIVALENT	MANUF.
	Q.....10	50.03.0350	J112F	J112, TM00062	Sc,NS,Mot
	Q.....11	50.03.0329	WP 146		Sx
	R.....1	57.11.4471	470 Ohm	2%	
	R.....2	58.11.6203	20 kOhm	See Note 2	
	R.....3	57.11.4103	10 kOhm	2%	
	R.....4	57.11.4562	5.6 kOhm	2%	
	R.....5	57.11.4562	5.6 kOhm	2%	
	R.....6	57.11.4331	330 Ohm	2%	
	R.....7	57.11.4105	1 MOhm	2%	
	R.....8	58.11.6203	20 kOhm	See Note 2	
	R.....9	57.11.4101	100 Ohm	2%	
	R.....10	58.11.6203	20 kOhm	See Note 2	
	R.....11	57.11.4102	1 kOhm	2%	
	R.....12	57.11.4102	1 kOhm	2%	
	R.....13	57.11.4273	27 kOhm	5%	
	R.....14	57.11.4124	120 kOhm	5%	
	R.....15	58.11.6502	5 kOhm	See Note 3	
	R.....16	57.11.4473	47 kOhm	2%	
	R.....17	57.11.4103	10 kOhm	2%	
	R.....18	57.11.4103	10 kOhm	2%	
	R.....19	57.11.4104	100 kOhm	2%	
	R.....20	57.11.4105	1 MOhm	2%	
	R.....21	57.11.4105	1 MOhm	2%	
	R.....22	57.11.4393	39 kOhm	2%	
	R.....23	57.11.5106	10 MOhm	5%	
	R.....24	57.11.4181	180 Ohm	2%	
	R.....25	57.11.4153	15 kOhm	2%	
	R.....26	57.11.4472	4.7 kOhm	2%	
	R.....27	57.11.4103	10 kOhm	2%	
	R.....28	57.11.3472	4.7 kOhm	1%	
	R.....29	57.11.3102	1 kOhm	1%	
	R.....30	57.99.0209	5.6 Ohm	PTC Resistor, Philips Nr. 2322 662 91005	
	R.....31	57.11.4103	10 kOhm	2%	
	R.....32	57.11.4104	100 kOhm	5%	
	R.....33	57.11.4104	100 kOhm	2%	
	R.....34	57.11.4221	220 Ohm	2%	
	R.....35	57.11.4103	10 kOhm	2%	
	R.....36	57.11.4105	1 MOhm	2%	
	R.....37	57.11.4103	10 kOhm	2%	
	R.....38	57.11.3472	4.7 kOhm	1%	
	R.....39	57.11.4471	470 Ohm	2%	
	R.....40	57.11.4152	1.5 kOhm	2%	
	R.....41	57.11.4102	1 kOhm	2%	
	R.....42	57.11.4104	100 kOhm	2%	
	R.....43	57.11.4152	1.5 kOhm	2%	
	R.....44	57.11.4683	68 kOhm	2%	
	R.....45	57.11.4105	1 MOhm	2%	
	R.....46	57.11.4103	10 kOhm	2%	
	R.....47	57.11.4103	10 kOhm	2%	
	R.....48	57.11.4392	3.9 kOhm	2%	
	R.....49	57.11.4102	1 kOhm	2%	
	R.....50	57.11.4103	10 kOhm	2%	
	R.....51	57.11.4103	10 kOhm	2%	
	R.....52	57.11.5106	10 MOhm	5%	
	R.....53	57.11.3112	1.2 kOhm	1%	
	R.....54	57.11.4392	3.9 kOhm	2%	
	R.....55	57.11.3112	1.2 kOhm	1%	
	R.....56	57.11.3202	2 kOhm	1%	
	R.....57	57.11.3102	1 kOhm	1%	
	R.....58	57.11.3272	2.7 kOhm	1%	
	R.....59	57.11.3821	820 Ohm	1%	
	R.....60	57.11.4104	100 kOhm	2%	
	R.....61	57.11.4105	1 MOhm	2%	
	R.....62	57.11.3152	1.5 kOhm	1%	
	R.....63	57.11.5225	2.2 MOhm	5%	
	R.....64	57.11.4102	1 kOhm	2%	
	R.....65	57.11.4103	10 kOhm	2%	
	R.....66	57.11.3102	1 kOhm	1%	
	R.....67	57.11.3102	1 kOhm	1%	
	R.....68	57.11.4153	15 kOhm	2%	
	R.....69	57.11.4105	1 MOhm	2%	
	R.....70	57.11.4105	1 MOhm	2%	
	R.....71	57.11.4102	1 kOhm	2%	
	R.....72	57.11.4221	220 Ohm	2%	
	R.....73		not used		
	R.....74	57.11.4681	680 Ohm	2%	
	R.....75	57.11.4100	10 Ohm	2%	
	R.....76	57.11.4105	1 MOhm	2%	
	R.....77	57.11.4100	10 Ohm	2%	
	R.....78	57.11.4821	820 Ohm	2%	
	R.....79	57.11.4152	1.5 kOhm	2%	
	R.....80		not used		
	R.....81	57.11.4102	1 kOhm	2%	
	R.....82	57.11.4470	47 Ohm	2%	
	R.....83	57.11.5106	10 MOhm	5%	
	R.....84	57.11.4103	10 kOhm	2%	
	R.....85	57.11.4101	100 Ohm	2%	
	R.....86	57.11.4104	100 kOhm	2%	
	R.....87	57.11.4104	100 kOhm	2%	
	R.....88	57.11.4101	100 Ohm	2%	
	R.....89	57.11.4152	1.5 kOhm	2%	
	R.....90	57.11.4103	10 kOhm	2%	
	R.....91	57.11.4103	10 kOhm	2%	
	R.....92	57.11.4102	1 kOhm	2%	
	R.....93	57.11.4681	680 Ohm	2%	
	R.....94	57.11.4102	1 kOhm	2%	
	R.....95		not used		
	R.....96	57.11.4102	1 kOhm	5%	
	R.....97	57.11.3242	2.4 kOhm	5%	
	R.....98	57.11.4105	1 MOhm	2%	
	R.....99	57.11.5106	10 MOhm	5%	
	R.....100	57.11.5106	10 MOhm	5%	
	T.....1	1.022.218.00		Input Transformer L11	St
	T.....2	1.022.215.00		Time Code Output Transformer	St
	T.....3	1.022.221.00		Time Code HF Transformer	St

Note 1: Contact pin: Studer Nr. 54.01.0020
Berg Nr. 75 160-102-36
Philips Nr. 2422 025 89303
Bridge: Studer Nr. 54.01.0021
Cammatel Nr. 313.1365.000 408
Philips Nr. 2422 024 88003

Note 2: Potentiometer, linear, Bourns Nr. 3329 H - 1 - 203
VRN Nr. 170 - 20k
Lesa Nr. 170 - 20k

Note 3: Potentiometer, linear, Bourns Nr. 3329 H - 1 - 502
VRN Nr. 170 - 5k
Lesa Nr. 170 - 5k

Cer=Ceramic, Sal=Solid Aluminium

MANUFACTURER: Ex=Exar, Fc=Fairchild, GI=General Instruments,
ITT=Intermetall, Mot=Motorola, NS=National Semicond.,
Ph=Philips, Ra=Raytheon, RCA=Radio Corp. of America,
Ses=Sescosem, Sie=Siemens, Sig=Signetics, Stu=Studer,
Sx=Siliconix, TS=Toledyne Semiconductors, Tf=Telefunken,
TI=Texas Instruments

ORIG 85/01/31

S T U D E R (00) 85/01/31 LN CODE READ/WRITE UNIT 1.820.721.82 PAGE 7

TIME CODE READ/WRITE UNIT PCB 1.820.721.83/84 GR 20 EL 06 "ESE"

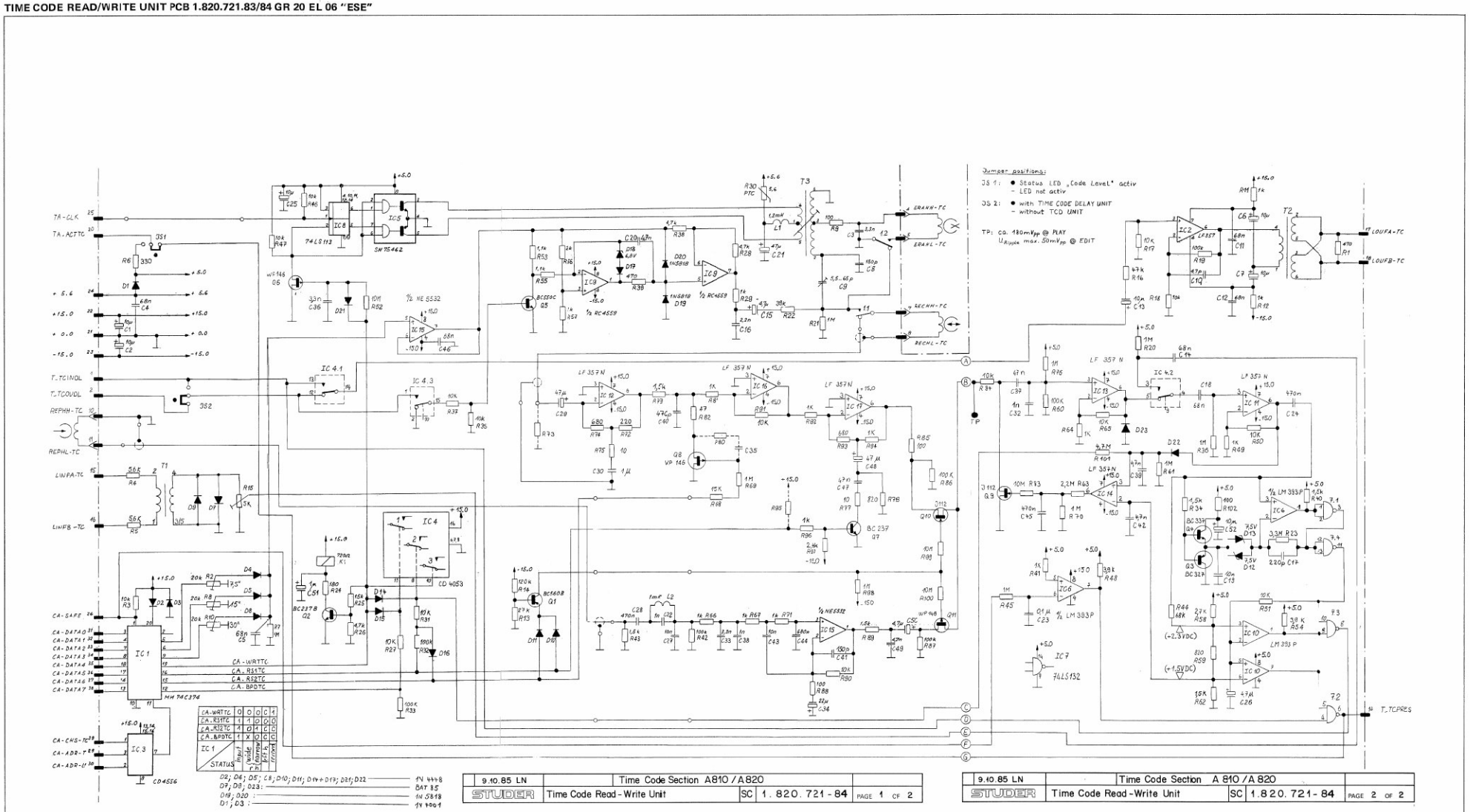

9.10.85 LN	Time Code Section A810 / A820			
STUDER	Time Code Read-Write Unit	SC	1.820.721-84	PAGE 1 OF 2

9.10.85 LN	Time Code Section A 810 / A 820			
STUDER	Time Code Read-Write Unit	SC	1.820.721-84	PAGE 2 OF 2

FOR 1.820.721.83:

R34	57.11.4221	220 Ohm	Q3	50.03.0496	BC 560
R23	57.11.5106	10 MOhm	Q4	50.03.0436	BC 237
C17	59.34.4101	100 pF 5 %	C52	NOT USED	
D12	50.04.0125	1N4448	R102	NOT USED	
D13	50.04.0125	1N4448			

PUBLISHED: 12/86

TIME CODE READ/WRITE UNIT PCB 1.820.721.83 GR 20 EL 06 "ESE"

COMPONENT SIDE

CODE READ/WRITE UNIT 1.820.721-83

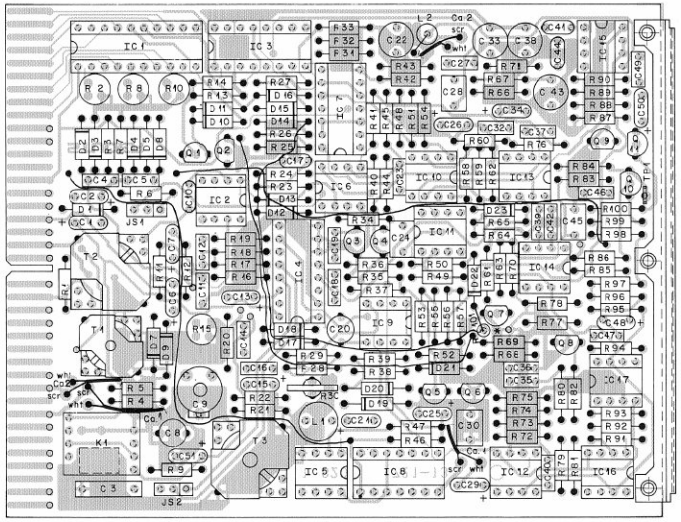

IND.	POS.NO.	PART NO.	VALUE	SPECIFICATIONS / EQUIVALENT	MANUF.
	D....23	50.04.0127	BAT 85	BAS 40-02	Ph,Sie
	IC....1	50.07.0003	MM74C374N		NSC
	IC....2	50.09.0110	LF357BN	Slew rate >30V/µs	NSC
	IC....3	50.07.0004	MC14556BC	PCD4556BE, 4556BPC	Fc,Mot,RCA
	IC....4	50.07.0019	MC14053B	CD4053BCN	Mot,NSC
	IC....5	50.05.0227	SN75462P	SN75472P, SN75462JG	TI
	IC....6	50.05.0283	LM393N	LM393	NSC,TI
	IC....7	50.06.0132	SN74LS132	NN74LS132N	TI,Sig
	IC....8	50.06.0113	SN74LS113	NN74LS113N, DM74LS113N	TI,Sig,NSC
	IC....9	50.09.0107	RC4559NB		Rc
	IC....10	50.05.0283	LM393N	LM393	NSC,TI
	IC....11	50.09.0110	LF357BN	Slew rate >30V/µs	NSC
	IC....12	50.09.0110	LF357BN	Slew rate >30V/µs	NSC
	IC....13	50.09.0110	LF357BN	Slew rate >30V/µs	NSC
	IC....14	50.09.0110	LF357BN	Slew rate >30V/µs	NSC
	IC....15	50.09.0106	NE5532AN	XR5532AN, 5532ANB	Sig+Exar
	IC....16	50.09.0110	LF357BN	Slew rate >30V/µs	NSC
	IC....17	50.09.0110	LF357BN	Slew rate >30V/µs	NSC
	JS....1			See Note 1	
	JS....2			See Note 1	
	K....1	56.04.0171	SM 01012		ITT
	L....1	62.02.2122	1.2 mH	TOK Nr. CSL 0812-122 J	
	L....2	62.01.0128	1 mH	Gowanda Nr. IT-104, Delevan Nr. 1641-105	
	Q....1	50.03.0496		BC560 E 6328	Sie
	Q....2	50.03.0436	BC237B	BC547B, BC550B	ITT,Mot,Ph,Sie
	Q....3	50.03.0496		BC560 E 6328	Sie
	Q....4	50.03.0436	BC237B	BC547B, BC550B	ITT,Mot,Ph,Sie
	Q....5	50.03.0497		BC150 E 6328	Sie
	Q....6	50.03.0329	WP 146		Sx
	Q....7	50.03.0436	BC237B	BC547B, BC550B	ITT,Mot,Ph,Sie
	Q....8	50.03.0329	WP 146		Sx
	Q....9	50.03.0350	J112F	J112, TMD0062	Sc,NS,Mot

IND.	POS.NO.	PART NO.	VALUE	SPECIFICATIONS / EQUIVALENT	MANUF.
	Q....10	50.03.0350	J112F	J112, TMD0062	Sc,NS,Mot
	Q....11	50.03.0329	WP 146		Sx
	R....1	57.11.4471	470 Ohm	2%	
	R....2	58.11.6203	20 kOhm	See Note 2	
	R....3	57.11.4103	10 kOhm	2%	
	R....4	57.11.4562	5.6 kOhm	2%	
	R....5	57.11.4562	5.6 kOhm	2%	
	R....6	57.11.4331	330 Ohm	2%	
	R....7	57.11.4105	1 MOhm	2%	
	R....8	58.11.6203	20 kOhm	See Note 2	
	R....9	57.11.4101	100 Ohm	2%	
	R....10	58.11.6203	20 kOhm	See Note 2	
	R....11	57.11.4102	1 kOhm	2%	
	R....12	57.11.4102	1 kOhm	2%	
	R....13	57.11.4273	27 kOhm	5%	
	R....14	57.11.4124	120 kOhm	5%	
	R....15	58.11.6502	5 kOhm	See Note 3	
	R....16	57.11.4473	47 kOhm	2%	
	R....17	57.11.4103	10 kOhm	2%	
	R....18	57.11.4103	10 kOhm	2%	
	R....19	57.11.4104	100 kOhm	2%	
	R....20	57.11.4105	1 MOhm	2%	
	R....21	57.11.4105	1 MOhm	2%	
	R....22	57.11.4393	39 kOhm	2%	
	R....23	57.11.5106	10 MOhm	5%	
	R....24	57.11.4181	180 Ohm	2%	
	R....25	57.11.4153	15 kOhm	2%	
	R....26	57.11.4472	4.7 kOhm	2%	
	R....27	57.11.4103	10 kOhm	2%	
	R....28	57.11.3472	4.7 kOhm	1%	
	R....29	57.11.3102	1 kOhm	1%	
	R....30	57.99.0209	5.6 Ohm	PTC Resistor, Philips Nr. 2322 662 91005	
	R....31	57.11.4103	10 kOhm	2%	
	R....32	57.11.4104	100 kOhm	5%	
	R....33	57.11.4104	100 kOhm	2%	
	R....34	57.11.4221	220 Ohm	2%	

IND.	POS.NO.	PART NO.	VALUE	SPECIFICATIONS / EQUIVALENT	MANUF.
	R....72	57.11.4221	220 Ohm	2%	
	R....73		not used		
	R....74	57.11.4681	680 Ohm	2%	
	R....75	57.11.4100	10 Ohm	2%	
	R....76	57.11.4105	1 MOhm	2%	
	R....77	57.11.4100	10 Ohm	2%	
	R....78	57.11.4821	820 Ohm	2%	
	R....79	57.11.4152	1.5 kOhm	2%	
	R....80		not used		
	R....81	57.11.4102	1 kOhm	2%	
	R....82	57.11.4470	47 Ohm	2%	
	R....83	57.11.5106	10 MOhm	5%	
	R....84	57.11.4103	10 kOhm	2%	
	R....85	57.11.4101	100 Ohm	2%	
	R....86	57.11.4104	100 kOhm	2%	
	R....87	57.11.4104	100 kOhm	2%	
	R....88	57.11.4101	100 Ohm	2%	
	R....89	57.11.4152	1.5 kOhm	2%	
	R....90	57.11.4103	10 kOhm	2%	
	R....91	57.11.4103	10 kOhm	2%	
	R....92	57.11.4102	1 kOhm	2%	
	R....93	57.11.4681	680 Ohm	2%	
	R....94	57.11.4102	1 kOhm	2%	
	R....95		not used		
	R....96	57.11.4102	1 kOhm	5%	
	R....97	57.11.3242	2.4 kOhm	5%	
	R....98	57.11.4105	1 MOhm	2%	
	R....99	57.11.5106	10 MOhm	5%	
	R....100	57.11.5106	10 MOhm	5%	
	R....101	57.11.5475	4.7 MOhm	5%	
	T....1	1.022.218.00		Input Transformer IT1	St
	T....2	1.022.215.00		Time Code Output Transformer	St
	T....3	1.022.221.00		Time Code HF Transformer	St

IND.	POS.NO.	PART NO.	VALUE	SPECIFICATIONS / EQUIVALENT	MANUF.
Note 1:	Contact pins	Studer Nr.		54.01.0020	
		Berg Nr.		75 160-102-36	
		Philips Nr.		2422 025 69301	
	Bridge:	Studer Nr.		54.01.0021	
		Cannatel Nr.		313.1365.000 408	
		Philips Nr.		2422 024 88003	
Note 2:	Potentiometer, linear,	Bourns Nr.	3329 H - 1 - 203		
		VAN Nr.	170 - 20k		
		Lesa Nr.	170 - 20k		
Note 3:	Potentiometer, linear,	Bourns Nr.	3329 H - 1 - 502		
		VAN Nr.	170 - 5k		
		Lesa Nr.	170 - 5k		
Ce=Ceramic, Sal=Solid Aluminium					
MANUFACTURERS:	Ex=Exar, Fc=Fairchild, Gi=General Instruments, ITT=Intermetall, Mot=Motorola, NS=National Semicond., Ph=Philips, Ra=Raytheon, RCA=Radio Corp. of America, Ses=Sescosem, Sie=Siemens, Sig=Signetics, St=Studer, Sx=Siliconix, Ts=Teledyne Semiconductors, Tf=Telefunken, TI=Texas Instruments				
ORIG 85/07/22					

IND.	POS.NO.	PART NO.	VALUE	SPECIFICATIONS / EQUIVALENT	MANUF.
	C....1	59.26.2100	10 uF	20%, 16V, Sal	Ph
	C....2	59.26.2100	10 uF	20%, 16V, Sal	Ph
	C....3	59.11.6332	3.3 nF	5%	
	C....4	59.99.0205	68 nF	-20%, Ce	
	C....5	59.99.0205	68 nF	-20%, Ce	
	C....6	59.26.2100	10 uF	20%, 16V, Sal	Ph
	C....7	59.26.2100	10 uF	20%, 16V, Sal	Ph
	C....8	59.05.2151	150 pF	2.5%	
	C....9	59.16.0102	65 pF	Trimmer Capacitor, Philips Nr 2222 808 01001	
	C....10	59.36.0479	4.7 pF	10%, Ce	
	C....11	59.99.0205	68 nF	-20%, Ce	
	C....12	59.99.0205	68 nF	-20%, Ce	
	C....13	59.26.2100	10 uF	20%, 16V, Sal	Ph
	C....14	59.06.0083	68 nF	10%	
	C....15	59.26.5479	4.7 uF	20%, 25V, Sal	Ph
	C....16	59.06.0222	2.2 nF	10%	
	C....17	59.36.4101	100 pF	5%, Ce	
	C....18	59.06.0083	68 nF	10%	
	C....19	59.06.0103	10 nF	10%	
	C....20	59.05.2472	4.7 nF	2.5%	
	C....21	59.26.6470	47 uF	20%, 6.3V, Sal	Ph
	C....22	59.05.1102	1 nF	1%	
	C....23	59.06.0104	100 nF	10%	
	C....24	59.06.0474	470 nF	10%	
	C....25	59.26.2100	10 uF	20%, 16V, Sal	Ph
	C....26	59.26.5479	4.7 uF	20%, 25V, Sal	Ph
	C....27	59.06.0103	10 nF	10%	
	C....28	59.06.0474	470 nF	10%	
	C....29	59.26.6470	47 uF	20%, 6.3V, Sal	Ph
	C....30	59.06.5105	1 uF	5%	
	C....31		not used		
	C....32	59.06.5102	1 nF	10%	
	C....33	59.05.1332	3.3 nF	1%	
	C....34	59.26.1220	22 uF	20%, 10V, Sal	Ph
	C....35		not used		
	C....36	59.06.0332	3.3 nF	10%	
	C....37	59.06.0473	47 nF	10%	

IND.	POS.NO.	PART NO.	VALUE	SPECIFICATIONS / EQUIVALENT	MANUF.
	C....38	59.05.1102	1 nF	1%	
	C....39	59.06.0472	4.7 nF	10%	
	C....40	59.32.2471	470 pF	10%	
	C....41	59.34.4151	150 pF	5%, Ce	
	C....42	59.06.0472	4.7 nF	10%	
	C....43	59.05.1103	10 nF	1%	
	C....44	59.32.2681	680 pF	10%, Ce	
	C....45	59.06.0474	470 nF	10%	
	C....46	59.99.0205	68 nF	-20%, Ce	
	C....47	59.06.0473	47 nF	10%	
	C....48	59.26.0470	47 uF	20%, 6.3V, Sal	Ph
	C....49	59.06.0472	4.7 nF	10%	
	C....50	59.26.5479	4.7 uF	20%, 25V, Sal	Ph
	C....51	59.26.9109	1 uF	20%, 40V, Sal	
	D....1	50.04.0122	1N4001	1N4002, 1N4003, 1N4004	Mot,Gi,Sol
	D....2	50.04.0125	1N4448		Fc,ITT,Ph,Ses
	D....3	50.04.0122	1N4001	1N4002, 1N4003, 1N4004	Mot,Gi,Sol
	D....4	50.04.0125	1N4448		Fc,ITT,Ph,Ses
	D....5	50.04.0125	1N4448		Fc,ITT,Ph,Ses
	D....7	50.04.0127	BAT 85	BAS 40-02	
	D....8	50.04.0125	1N4448		Ph,Sie
	D....9	50.04.0127	BAT 85	BAS 40-02	Fc,ITT,Ph,Ses
	D....10	50.04.0125	1N4448		Ph,Sie
	D....11	50.04.0125	1N4448		Fc,ITT,Ph,Ses
	D....12	50.04.0125	1N4448		Fc,ITT,Ph,Ses
	D....13	50.04.0125	1N4448		Fc,ITT,Ph,Ses
	D....14	50.04.0125	1N4448		Fc,ITT,Ph,Ses
	D....15	50.04.0125	1N4448		Fc,ITT,Ph,Ses
	D....16	50.04.0125	1N4448		Fc,ITT,Ph,Ses
	D....17	50.04.0125	1N4448		Fc,ITT,Ph,Ses
	D....18	50.04.1102	6.8 V Z	1ZX83C 6.8, ZPD 6.8	Ses,ITT
	D....19	50.04.0512	1N5818	1N5819	Mot
	D....20	50.04.0512	1N5818	1N5819	Mot
	D....21	50.04.0125	1N4448		Fc,ITT,Ph,Ses
	D....22	50.04.0125	1N4448		Fc,ITT,Ph,Ses

IND.	POS.NO.	PART NO.	VALUE	SPECIFICATIONS / EQUIVALENT	MANUF.
	R....35	57.11.4103	10 kOhm	2%	
	R....36	57.11.4105	1 MOhm	2%	
	R....37	57.11.4103	10 kOhm	2%	
	R....38	57.11.3472	4.7 kOhm	1%	
	R....39	57.11.4471	470 Ohm	2%	
	R....40	57.11.4152	1.5 kOhm	2%	
	R....41	57.11.4102	1 kOhm	2%	
	R....42	57.11.4104	100 kOhm	2%	
	R....43	57.11.4152	1.5 kOhm	2%	
	R....44	57.11.4683	68 kOhm	2%	
	R....45	57.11.4105	1 MOhm	2%	
	R....46	57.11.4103	10 kOhm	2%	
	R....47	57.11.4103	10 kOhm	2%	
	R....48	57.11.4392	3.9 kOhm	2%	
	R....49	57.11.4102	1 kOhm	2%	
	R....50	57.11.4103	10 kOhm	2%	
	R....51	57.11.4103	10 kOhm	2%	
	R....52	57.11.5106	10 MOhm	5%	
	R....53	57.11.1112	1.1 kOhm	1%	
	R....54	57.11.4392	3.9 kOhm	2%	
	R....55	57.11.1112	1.1 kOhm	1%	
	R....56	57.11.3202	2 kOhm	1%	
	R....57	57.11.3102	1 kOhm	1%	
	R....58	57.11.3272	2.7 kOhm	1%	
	R....59	57.11.3821	820 Ohm	1%	
	R....60	57.11.4104	100 kOhm	2%	
	R....61	57.11.4105	1 MOhm	2%	
	R....62	57.11.3192	1.9 kOhm	1%	
	R....63	57.11.3225	2.2 MOhm	5%	
	R....64	57.11.4102	1 kOhm	2%	
	R....65	57.11.4103	10 kOhm	2%	
	R....66	57.11.3102	1 kOhm	1%	
	R....67	57.11.4102	1 kOhm	2%	
	R....68	57.11.4153	15 kOhm	2%	
	R....69	57.11.4105	1 MOhm	2%	
	R....70	57.11.4105	1 MOhm	2%	
	R....71	57.11.4102	1 kOhm	2%	

PUBLISHED: 12/86

TIME CODE READ/WRITE UNIT PCB 1.820.721.84 GR 20 EL 06 "ESE"

COMPONENT SIDE

CODE READ/WRITE UNIT 1.820.721-84

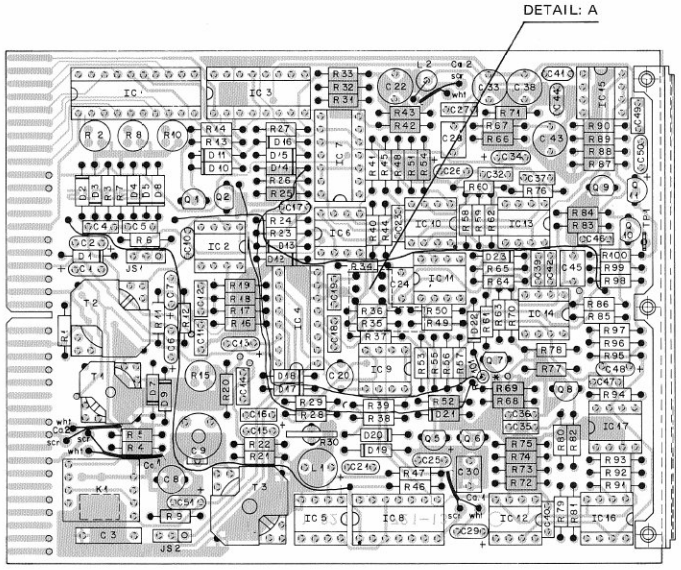

DETAIL: A

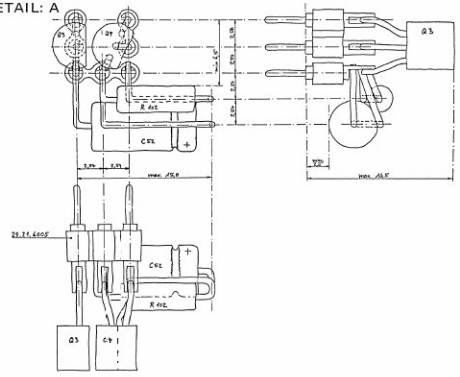

INO.	POS.NO.	PART NO.	VALUE	SPECIFICATIONS / EQUIVALENT	MANUF.
	C.....1	59.26.2108	10 uF	20%, 16V, Sal	PhrRi
	C.....2	59.26.2108	10 uF	20%, 16V, Sal	PhrR
	C.....3	Berg Nr.	3x3 nF	5%	
	C.....4	59.99.0205	68 nF	-20%, Ce	
	C.....5	59.99.0205	68 nF	-20%, Ce	
	C.....6	59.26.2108	10 uF	20%, 16V, Sal	PhrR
	C.....7	59.26.2108	10 uF	20%, 16V, Sal	PhrR
	C.....8	59.05.2151	150 pF	2.5%	
	C.....9	59.18.0102	65 pF	Trimmer Capacitor, Philips Nr 2222 809 0100.	
	C.....10	59.34.0479	4x7 pF	10%, Co	
	C.....11	59.99.0205	68 nF	-20%, Co	
	C.....12	59.99.0205	68 nF	-20%, Co	
	C.....13	59.26.2108	10 uF	20%, 16V, Sal	PhrR
	C.....14	59.06.0685	68 nF	10%	
	C.....15	59.26.5479	4x7 uF	20%, 25V, Sal	PhrR
	C.....16	59.06.0221	2x2 nF	10%	
	C.....17	59.34.4221	220 pF	5%, Co	
	C.....18	59.06.0685	68 nF	10%	
	C.....19	59.06.0101	10 nF	10%	
	C.....20	59.05.2472	4x7 nF	2.5%	
	C.....21	59.26.0470	47 uF	20%, 6.3V, Sal	PhrR
	C.....22	59.05.1101	1 nF	1%	
	C.....23	59.06.0104	100 nF	10%	
	C.....24	59.06.0474	470 nF	10%	
	C.....25	59.26.2100	10 uF	20%, 16V, Sal	PhrR
	C.....26	59.26.5475	4x7 uF	20%, 25V, Sal	PhrR
	C.....27	59.06.0101	10 nF	10%	
	C.....28	59.06.0474	470 nF	10%	
	C.....29	59.26.0470	47 uF	20%, 6.3V, Sal	PhrRi
	C.....30	59.06.5105	1 uF	5%	
	C.....31		not used		
	C.....32	59.06.5102	1 nF	10%	
	C.....33	59.05.1332	3x3 nF	1%	
	C.....34	59.26.1220	22 uF	20%, 10V, Sal	PhrRi
	C.....35		not used		
	C.....36	59.06.0332	3x3 nF	10%	
	C.....37	59.06.0473	47 nF	10%	

INO.	POS.NO.	PART NO.	VALUE	SPECIFICATIONS / EQUIVALENT	MANUF.
	C.....38	59.05.1107	1 nF	1%	
	C.....39	59.06.0472	4x7 nF	10%	
	C.....40	59.32.2471	470 pF	10%	
	C.....41	59.34.4151	150 pF	5%, Co	
	C.....42	59.06.0472	4x7 nF	10%	
	C.....43	59.05.1103	10 nF	1%	
	C.....44	59.32.2681	680 pF	10%, Co	
	C.....45	59.06.0474	470 nF	10%, Co	
	C.....46	59.99.0205	68 nF	-20%, Co	
	C.....47	59.06.0473	47 nF	10%	
	C.....48	59.26.0470	47 uF	20%, 6.3V, Sal	PhrRi
	C.....49	59.06.0472	4x7 nF	10%	
	C.....50	59.26.5479	4x7 uF	20%, 25V, Sal	PhrRi
	C.....51	59.26.4109	1 uF	20%, 40V, Sal	
	C.....52	59.26.4100	10 uF	20%, 10V, El	
	D.....1	50.04.0122	1N4001	1N4002, 1N4003, 1N4004	Mot,GI,Sol
	D.....2	50.04.0125	1N4448		Fc,ITT,Ph,Ses
	D.....3	50.04.0122	1N4001	1N4002, 1N4003, 1N4004	Mot,GI,Sol
	D.....4	50.04.0125	1N4448		Fc,ITT,Ph,Ses
	D.....5	50.04.0125	1N4448		Fc,ITT,Ph,Ses
	D.....7	50.04.0127	BAT 85	BAS 40-02	Ph,Sie
	D.....8	50.04.0125	1N4448		Fc,ITT,Ph,Ses
	D.....9	50.04.0127	BAT 85	BAS 40-02	Ph,Sie
	D.....10	50.04.0125	1N4448		Fc,ITT,Ph,Ses
	D.....11	50.04.0125	1N4448		Fc,ITT,Ph,Ses
	D.....12	50.04.1103	7.5 V Z	BZX83C 7V5, BZX55C 7V5, ZPD 7.5	Ses,ITT
	D.....13	50.04.1103	7.5 V Z	BZX83C 7V5, BZX55C 7V5, ZPD 7.5	Ses,ITT
	D.....14	50.04.0125	1N4448		Fc,ITT,Ph,Ses
	D.....15	50.04.0125	1N4448		Fc,ITT,Ph,Ses
	D.....16	50.04.0125	1N4448		Fc,ITT,Ph,Ses
	D.....17	50.04.0125	1N4448		Fc,ITT,Ph,Ses
	D.....18	50.04.1102	6.8 V Z	BZX83C 6V8, BZX55C 6V8, ZPD 6.8	Ses,ITT
	D.....19	50.04.0512	1N5818	1N5819	Mot
	D.....20	50.04.0512	1N5818	1N5819	Mot
	D.....21	50.04.0125	1N4448		Fc,ITT,Ph,Ses

INO.	POS.NO.	PART NO.	VALUE	SPECIFICATIONS / EQUIVALENT	MANUF.
	D.....22	50.04.0125	1N4448		Fc,ITT,Ph,Ses
	D.....23	50.04.0127	BAT 85	BAS 40-02	Ph,Sie
	IC.....1	50.07.0003	MM34C374N		NSC
	IC.....2	50.09.0110	LF357BN	Slew rate >30V/us	NSC
	IC.....3	50.07.0004	MC145568CP	CD4556BE, 4556BPC	Fc,Mot,RCA
	IC.....4	50.07.0015	MC140538	CD4053BCN	Mot,NSC
	IC.....5	50.05.0227	SN7546ZP	SN75472P, SN75462JG	TI
	IC.....6	50.05.0283	LM393N	LM393	NSC,TI
	IC.....7	50.06.0132	SN74LS132N	N74LS132N	TI,Sig
	IC.....8	50.06.0113	SN74LS113N	N74LS113N, DM74LS113N	TI,Sig,NSC
	IC.....9	50.09.0107	HCC4559NB		Ka
	IC.....10	50.05.0283	LM393N	LM393	NSC,TI
	IC.....11	50.09.0110	LF357BN	Slew rate >30V/us	NSC
	IC.....12	50.09.0110	LF357BN	Slew rate >30V/us	NSC
	IC.....13	50.09.0110	LF357BN	Slew rate >30V/us	NSC
	IC.....14	50.09.0110	LF357BN	Slew rate >30V/us	NSC
	IC.....15	50.09.0106	NE5532AN	XR5532AN, SS32AN8	Sig,Ex,Ra
	IC.....16	50.09.0110	LF357BN	Slew rate >30V/us	NSC
	IC.....17	50.09.0110	LF357BN	Slew rate >30V/us	NSC
	JS.....1			See Note 1	
	JS.....2			See Note 1	
	K.....1	56.04.0171	SM D1012		ITT
	L.....1	62.02.2122	1x2 mH	TDK Nr. CSL 0812-122 J	
	L.....2	62.01.0128	1 mH	Gowanda Nr. L7-104, Delevan Nr. 1641-105	
	Q.....1	50.03.0496	BC560C		Sie
	Q.....2	50.03.0436	BC237B	BC547B, BC550B	ITT,Mot,Ph,Sie
	Q.....3	50.03.0351	BC327-25		ITT,Ph,Sie
	Q.....4	50.03.0340	BC337-25		ITT,NS,Ph,Sie
	Q.....5	50.03.0497	BC550C		Sie
	Q.....6	50.03.0329	WP 146		Sx
	Q.....7	50.03.0436	BC237B	BC547B, BC550B	ITT,Mot,Ph,Sie
	Q.....8	50.03.0329	WP 146		Sx

INO.	POS.NO.	PART NO.	VALUE	SPECIFICATIONS / EQUIVALENT	MANUF.
	Q.....9	50.03.0350	J112F	J112, TP00062	Sc,NS,Mot
	Q.....10	50.03.0350	J112F	J112, TP00062	Sc,NS,Mot
	Q.....11	50.03.0329	WP 146		Sx
	R.....1	57.11.4471	470 Ohm	2%	
	R.....2	58.11.6203	20 kOhm	See Note 2	
	R.....3	57.11.4103	10 kOhm	2%	
	R.....4	57.11.4562	5.6 kOhm	2%	
	R.....5	57.11.4562	5.6 kOhm	2%	
	R.....6	57.11.4331	330 Ohm	2%	
	R.....7	57.11.4105	1 MOhm	2%	
	R.....8	58.11.6203	20 kOhm	See Note 2	
	R.....9	57.11.4101	100 Ohm	2%	
	R.....10	58.11.6203	20 kOhm	See Note 2	
	R.....11	57.11.4102	1 kOhm	2%	
	R.....12	57.11.4102	1 kOhm	2%	
	R.....13	57.11.4273	27 kOhm	5%	
	R.....14	57.11.4124	120 kOhm	5%	
	R.....15	58.11.6502	5 kOhm	See Note 3	
	R.....16	57.11.4473	47 kOhm	2%	
	R.....17	57.11.4103	10 kOhm	2%	
	R.....18	57.11.4103	10 kOhm	2%	
	R.....19	57.11.4104	100 kOhm	2%	
	R.....20	57.11.4105	1 MOhm	2%	
	R.....21	57.11.4105	1 MOhm	2%	
	R.....22	57.11.4393	39 kOhm	2%	
	R.....23	57.11.5335	3x3 MOhm	5%	
	R.....24	57.11.4181	180 Ohm	2%	
	R.....25	57.11.4153	15 kOhm	2%	
	R.....26	57.11.4472	4x7 kOhm	2%	
	R.....27	57.11.4103	10 kOhm	2%	
	R.....28	57.11.3472	4x7 kOhm	1%	
	R.....29	57.11.4102	1 kOhm	1%	
	R.....30	57.99.0209	5x6 Ohm	PTC Resistor, Philips Nr. 2322 662 91005	
	R.....31	57.11.4103	10 kOhm	2%	
	R.....32	57.11.4104	100 kOhm	2%	
	R.....33	57.11.4104	100 kOhm	2%	

INO.	POS.NO.	PART NO.	VALUE	SPECIFICATIONS / EQUIVALENT	MANUF.
	R.....34	57.11.4152	1.5 kOhm	2%	
	R.....35	57.11.4102	10 kOhm	2%	
	R.....36	57.11.4105	1 MOhm	2%	
	R.....37	57.11.4103	10 kOhm	2%	
	R.....38	57.11.3472	4x7 kOhm	1%	
	R.....39	57.11.4471	470 Ohm	2%	
	R.....40	57.11.4152	1.5 kOhm	2%	
	R.....41	57.11.4102	1 kOhm	2%	
	R.....42	57.11.4104	100 kOhm	2%	
	R.....43	57.11.4152	1.5 kOhm	2%	
	R.....44	57.11.4683	68 kOhm	2%	
	R.....45	57.11.4105	1 MOhm	2%	
	R.....46	57.11.4103	10 kOhm	2%	
	R.....47	57.11.4103	10 kOhm	2%	
	R.....48	57.11.4392	3.9 kOhm	2%	
	R.....49	57.11.4102	1 kOhm	2%	
	R.....50	57.11.4103	10 kOhm	2%	
	R.....51	57.11.4103	10 kOhm	2%	
	R.....52	57.11.5106	10 MOhm	5%	
	R.....53	57.11.3112	1.1 kOhm	1%	
	R.....54	57.11.4392	3.9 kOhm	2%	
	R.....55	57.11.3112	1.1 kOhm	1%	
	R.....56	57.11.3202	2 kOhm	1%	
	R.....57	57.11.3102	1 kOhm	1%	
	R.....58	57.11.3272	2.7 kOhm	1%	
	R.....59	57.11.3821	820 Ohm	1%	
	R.....60	57.11.4104	100 kOhm	2%	
	R.....61	57.11.4105	1 MOhm	2%	
	R.....62	57.11.3152	1.5 kOhm	1%	
	R.....63	57.11.5225	2.2 MOhm	5%	
	R.....64	57.11.4102	1 kOhm	2%	
	R.....65	57.11.4103	10 kOhm	2%	
	R.....66	57.11.3102	1 kOhm	1%	
	R.....67	57.11.3102	1 kOhm	1%	
	R.....68	57.11.4153	15 kOhm	2%	
	R.....69	57.11.4105	1 MOhm	2%	
	R.....70	57.11.4105	1 MOhm	2%	

INO.	POS.NO.	PART NO.	VALUE	SPECIFICATIONS / EQUIVALENT	MANUF.
	R.....71	57.11.4102	1 kOhm	2%	
	R.....72	57.11.4221	220 Ohm	2%	
	R.....73		not used		
	R.....74	57.11.4681	680 Ohm	2%	
	R.....75	57.11.4100	10 Ohm	2%	
	R.....76	57.11.4105	1 MOhm	2%	
	R.....77	57.11.4100	10 Ohm	2%	
	R.....78	57.11.4821	820 Ohm	2%	
	R.....79	57.11.4152	1.5 kOhm	2%	
	R.....80		not used		
	R.....81	57.11.4102	1 kOhm	2%	
	R.....82	57.11.4470	47 Ohm	2%	
	R.....83	57.11.5106	10 MOhm	5%	
	R.....84	57.11.4103	10 kOhm	2%	
	R.....85	57.11.4101	100 Ohm	2%	
	R.....86	57.11.4104	100 kOhm	2%	
	R.....87	57.11.4104	100 kOhm	2%	
	R.....88	57.11.4101	100 Ohm	2%	
	R.....89	57.11.4152	1.5 kOhm	2%	
	R.....90	57.11.4103	10 kOhm	2%	
	R.....91	57.11.4103	10 kOhm	2%	
	R.....92	57.11.4102	1 kOhm	2%	
	R.....93	57.11.4681	680 Ohm	2%	
	R.....94	57.11.4102	1 kOhm	2%	
	R.....95		not used		
	R.....96	57.11.4102	1 kOhm	5%	
	R.....97	57.11.3242	2.4 kOhm	5%	
	R.....98	57.11.4105	1 MOhm	2%	
	R.....99	57.11.5106	10 MOhm	5%	
	R.....100	57.11.5106	10 MOhm	5%	
	R.....101	57.11.5475	4x7 MOhm	5%	
	R.....102	57.11.4101	100 Ohm	5%	
	T.....1	1.022.218.00		Input Transformer 1:1	St
	T.....2	1.022.215.00		Time Code Output Transformer	St
	T.....3	1.022.221.00		Time Code HF Transformer	St

INO.	POS.NO.	PART NO.	VALUE	SPECIFICATIONS / EQUIVALENT	MANUF.
	Note 1: Contact pin:	Studer Nr.			54.01.0020
		Berg Nr.			75 160-102-36
		Philips Nr.			2422 025 89303
	Bridge:	Studer Nr.			54.01.0021
		Commatel Nr.			313.1365.000 408
		Philips Nr.			2422 024 88003
	Note 2: Potentiometer, linear,	Bourns Nr.	3329 H - 1 - 203		
		VRN Nr.	170 - 20k		
		Lesa Nr.	170 - 20k		
	Note 3: Potentiometer, linear,	Bourns Nr.	3329 H - 1 - 502		
		VRN Nr.	170 - 5k		
		Lesa Nr.	170 - 5k		

Co=Ceramic, Sal=Solid Aluminium, El=Electrolytic

MANUFACTURER: Ex=Exar, Fc=Fairchild, GI=General Instruments,
ITT=Intermetall, Mot=Motorola, NS=National Semicond.,
Ph=Philips, Ra=Raytheon, RCA=Radio Corp. of America,
Ses=Sescosem, Sie=Siemens, Sig=Signetics, St=Studer,
Sx=Siliconix, Te=Teledyne Semiconductors, TF=Telefunken,
TI=Texas Instruments

ORIG 85/10/09

PUBLISHED: 12/86

TIME CODE READ–WRITE UNIT 1.820.721.85

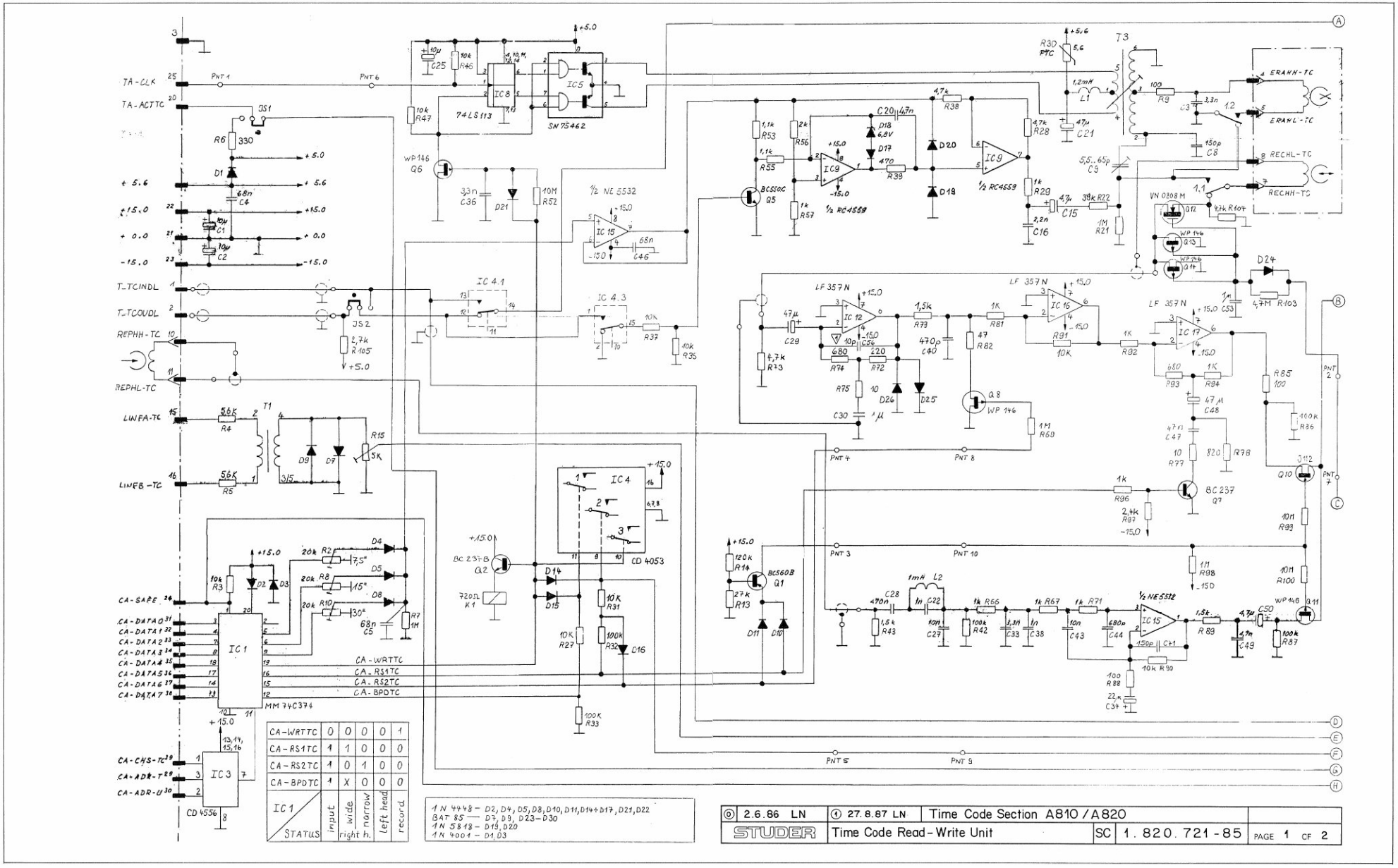

CA-WRTTC	0	0	0	0	1
CA-RS1TC	1	1	0	0	0
CA-RS2TC	1	0	1	0	0
CA-BPDTC	1	X	0	0	0
IC1 / STATUS	input	wide	narrow	left head	record
		right h.			

⓪ 2.6.86 LN	① 27.8.87 LN	Time Code Section A810 / A820	
STUDER	Time Code Read-Write Unit	SC 1.820.721-85	PAGE 1 OF 2

TIME CODE READ–WRITE UNIT 1.820.721.85

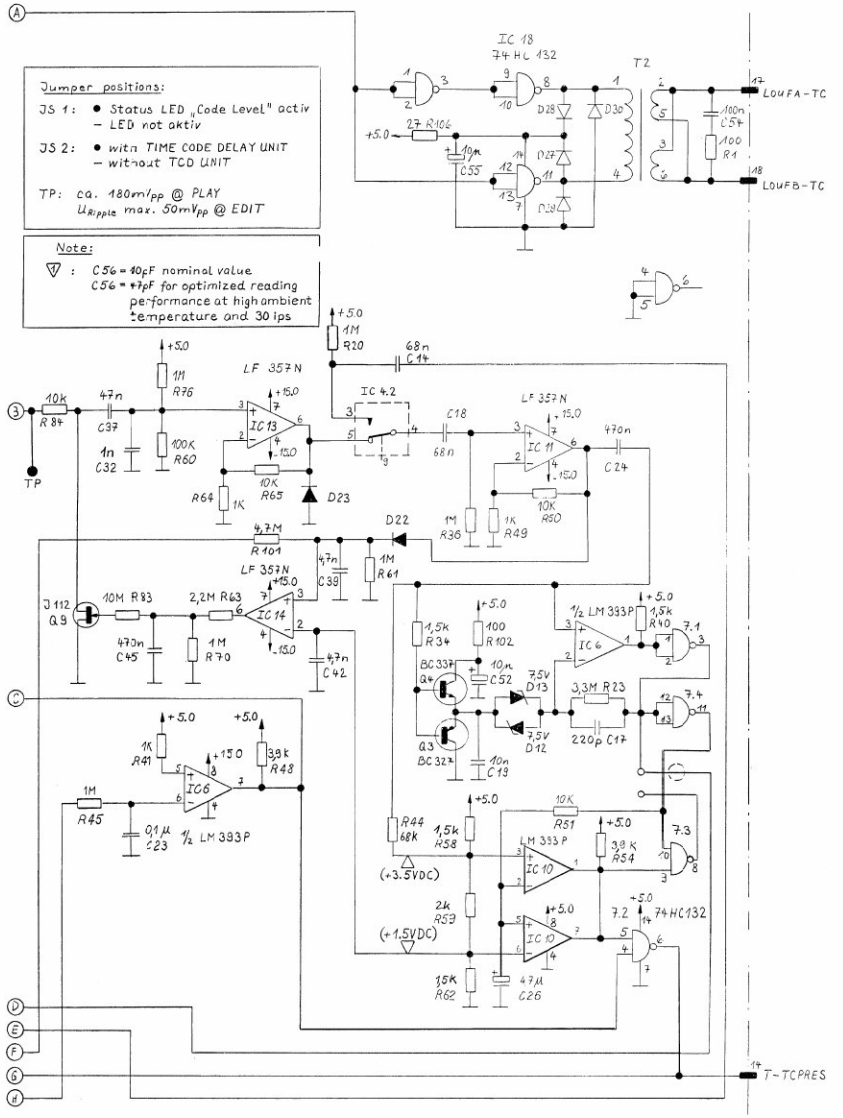

⓪ 2.6.86 LN	① 27.8.87 LN	Time Code Section A 810 / A 820	
STUDER	Time Code Read-Write Unit	SC 1.820.721-85	PAGE 2 OF 2

TIME CODE READ–WRITE UNIT 1.820.721.85

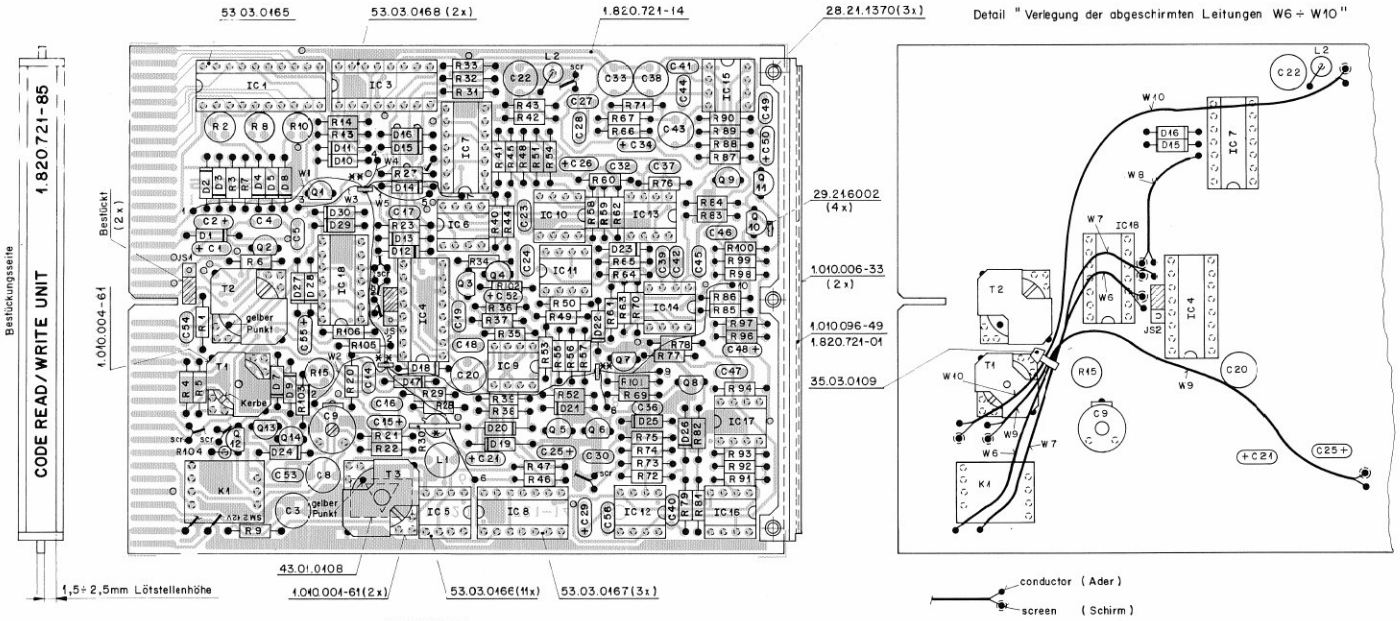

* 50.03.9914

** W1 ÷ W5 durch Lötösen 29.21.6002 hindurchgeführt

Drahtverbindungen

Nr.	Punkt ◄ ► Punkt	Norm Nr.	Verarbeitung Abschneidelänge	Verarbeitung Abisolierung
W 1	1 ◄ ► 6	1.010.115-64		
W 2	2 ◄ ► 7	1.010.113-64		
W 3	3 ◄ ► 10	1.010.118-64		
W 4	4 ◄ ► 8	1.010.115-64		
W 5	5 ◄ ► 9	1.010.116-64		
W 6		64.03.0186	95 mm	Bild 1
W 7		64.03.0186	90 mm	Bild 1
W 8		64.03.0186	40 mm	Bild 1
W 9		64.03.0186	115 mm	Bild 2
W 10		64.03.0186	130 mm	Bild 2

Schirm bündig mit Mantel

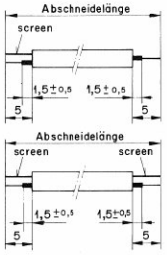

Bild 1

Toleranzen: ± 1,0

Bild 2

TIME CODE READ–WRITE UNIT 1.820.721.85

IND.	POS.NO.	PART NO.	VALUE	SPECIFICATIONS / EQUIVALENT	MANUF.
	C....1	59.26.2100	10 uF	20%, 16V, Sal	Ph,Ri
	C....2	59.26.2100	10 uF	20%, 16V, Sal	Ph,Ri
	C....3	59.05.1332	3.3 nF	2.5%	
	C....4	59.06.0683	68 nF	10%	
	C....5	59.06.0683	68 nF	10%	
	C....6		not used		
	C....7		not used		
	C....8	59.05.2151	150 pF	2.5%	
	C....9	59.18.0102	65 pF	Trimmer Capacitor, Philips Nr 2222 808 01001	
	C....10		not used		
	C....11		not used		
	C....12		not used		
	C....13		not used		
	C....14	59.06.0683	68 nF	10%	
	C....15	59.26.5479	4.7 uF	20%, 25V, Sal	Ph,Ri
	C....16	59.06.0222	2.2 nF	10%	
	C....17	59.34.4221	220 pF	5%, Ce	
	C....18	59.06.0683	68 nF	10%	
	C....19	59.06.0103	10 nF	10%	
	C....20	59.05.2472	4.7 nF	2.5%	
	C....21	59.26.0470	47 uF	20%, 6.3V, Sal	Ph,Ri
	C....22	59.05.1102	1 nF	1%	
	C....23	59.06.0104	100 nF	10%	
	C....24	59.06.0474	470 nF	10%	
	C....25	59.26.2100	10 uF	20%, 16V, Sal	Ph,Ri
	C....26	59.26.5479	4.7 uF	20%, 25V, Sal	Ph,Ri
	C....27	59.06.0103	10 nF	10%	
	C....28	59.06.0474	470 nF	10%	
	C....29	59.26.0470	47 uF	20%, 6.3V, Sal	Ph,Ri
	C....30	59.06.5105	1 uF	5%	
	C....31		not used		
	C....32	59.06.5102	1 nF	10%	
	C....33	59.05.1332	3.3 nF	1%	
	C....34	59.26.1220	22 uF	20%, 10V, Sal	Ph,Ri
	C....35		not used		
	C....36	59.06.0332	3.3 nF	10%	
	C....37	59.06.0473	47 nF	10%	

IND.	POS.NO.	PART NO.	VALUE	SPECIFICATIONS / EQUIVALENT	MANUF.
	C....38	59.05.1102	1 nF	1%	
	C....39	59.06.0472	4.7 nF	10%	
	C....40	59.32.2471	470 pF	10%	
	C....41	59.34.4151	150 pF	5%, Ce	
	C....42	59.06.0472	4.7 nF	10%	
	C....43	59.05.1103	10 nF	1%	
	C....44	59.32.2681	680 pF	10%, Ce	
	C....45	59.06.0474	470 nF	10%	
	C....46	59.06.0683	68 nF	10%	
	C....47	59.06.0473	47 nF	10%	
	C....48	59.26.0470	47 uF	20%, 6.3V, Sal	Ph,Ri
	C....49	59.06.0472	4.7 nF	10%	
	C....50	59.26.5479	4.7 uF	20%, 25V, Sal	Ph,Ri
	C....51		not used		
	C....52	59.26.1100	10 uF	20%, 10V, Sal	Ph,Ri
	C....53	59.06.5105	1 uF	5%	
	C....54	59.06.0104	100 nF	10%	
	C....55	59.26.1100	10 uF	20%, 10V, Sal	Ph,Ri
	C....56	59.34.1100	10 pF	5%, Ce	
	D....1	50.04.0122	1N4001	1N4002, 1N4003, 1N4004	Mot,GI,Sol
	D....2	50.04.0125	1N4448		Fe,ITT,Ph,Sem
	D....3	50.04.0122	1N4001	1N4002, 1N4003, 1N4004	Mot,GI,Sol
	D....4	50.04.0125	1N4448		Fe,ITT,Ph,Sem
	D....5	50.04.0125	1N4448		Fe,ITT,Ph,Sem
	D....6		not used		
	D....7	50.04.0127	BAT 85	BAS 40-02	Ph,Sie
	D....8	50.04.0125	1N4448		Fe,ITT,Ph,Sem
	D....9	50.04.0127	BAT 85	BAS 40-02	Ph,Sie
	D....10	50.04.0125	1N4448		Fe,ITT,Ph,Sem
	D....11	50.04.0125	1N4448		Fe,ITT,Ph,Sem
	D....12	50.04.1103	7.5 V Z	BZX83C 7V5, BZX55C 7V5, ZPD 7.5	Sem,ITT
	D....13	50.04.1103	7.5 V Z	BZX83C 7V5, BZX55C 7V5, ZPD 7.5	Sem,ITT
	D....14	50.04.0125	1N4448		Fe,ITT,Ph,Sem
	D....15	50.04.0125	1N4448		Fe,ITT,Ph,Sem
	D....16	50.04.0125	1N4448		Fe,ITT,Ph,Sem
	D....17	50.04.0125	1N4448		Fe,ITT,Ph,Sem

IND.	POS.NO.	PART NO.	VALUE	SPECIFICATIONS / EQUIVALENT	MANUF.
	D....18	50.04.1102	6.8 V Z	BZX83C 6V8, BZX55C 6V8, ZPD 6.8	Sem,ITT
	D....19	50.04.0512	1N5818	1N58.9	Mot
	D....20	50.04.0512	1N5818	1N58.9	Mot
	D....21	50.04.0125	1N4448		Fe,ITT,Ph,Sem
	D....22	50.04.0125	1N4448		Fe,ITT,Ph,Sem
	D....23	50.04.0127	BAT 85	BAS 40-02	Ph,Sie
	D....24	50.04.0127	BAT 85	BAS 40-02	Ph,Sie
	D....25	50.04.0127	BAT 85	BAS 40-02	Ph,Sie
	D....26	50.04.0127	BAT 85	BAS 40-02	Ph,Sie
	D....27	50.04.0127	BAT 85	BAS 40-02	Ph,Sie
	D....28	50.04.0127	BAT 85	BAS 40-02	Ph,Sie
	D....29	50.04.0127	BAT 85	BAS 40-02	Ph,Sie
	D....30	50.04.0127	BAT 85	BAS 40-02	Ph,Sie
	IC....1	50.07.0003	SN74C374N		NSC
	IC....2		not used		
	IC....3	50.07.0004	MC14556BCP	CD4556BE, 4556BPC	Fe,Mot,RCA
	IC....4	50.07.0015	SC14053B	CD4053BCN	Mot,NSC
	IC....5	50.05.0227	SN75462P	SN75472P, SN75462JG	TI
	IC....6	50.05.0283	LM393N	LM393	NSC,TI
	IC....7	50.17.1132	SC74HC132	FC74HC132 MM74HC132	Mot,Ph,NS
	IC....8	50.06.0113	SN74LS113N	N74LS113N, SN74LS113N	TI,Sig,NSC
	IC....9	50.09.0107	SC4559NB		Ma
	IC....10	50.05.0283	LM393N	LM393	NSC,TI
(00)	IC....11	50.09.0110	LF357BN	Slew rate >30V/us	NSC
(01)	IC....11	50.09.0110	LF357 A	Slew rate >40V/us	NS
(00)	IC....12	50.09.0110	LF357BN	Slew rate >30V/us	NSC
(01)	IC....12	50.09.0110	LF357 A	Slew rate >40V/us	NS
(00)	IC....13	50.09.0110	LF357BN	Slew rate >30V/us	NSC
(01)	IC....13	50.09.0110	LF357 A	Slew rate >40V/us	NS
(00)	IC....14	50.09.0110	LF357BN	Slew rate >30V/us	NSC
(01)	IC....14	50.09.0110	LF357 A	Slew rate >40V/us	NS
	IC....15	50.09.0106	NE5532AN	XN5532AN, 5532ANB	Sig,Ex,Ra
(00)	IC....16	50.09.0110	LF357BN	Slew rate >30V/us	NSC
(01)	IC....16	50.09.0110	LF357 A	Slew rate >40V/us	NS
(00)	IC....17	50.09.0110	LF357BN	Slew rate >30V/us	NSC
(01)	IC....17	50.09.0110	LF357 A	Slew rate >40V/us	NS

IND.	POS.NO.	PART NO.	VALUE	SPECIFICATIONS / EQUIVALENT	MANUF.
	IC....18	50.17.1132	MC74HC132	FC74HC132 MM74HC132	Mot,Ph,NS
	JS....1			See Note 1	
	JS....2			See Note 1	
	K....1	56.04.0171	SM 21012		ITT
	L....1	62.02.2122	1.2 mH	TDK Nr. CSL 0812-122 J	
	L....2	62.01.0128	1 mH	Gewanda Nr. 17-104, Delevan Nr. 1641-105	
	Q....1	50.03.0496	BC560C		Sie
	Q....2	50.03.0436	BC237B	BC547B, BC550B	ITT,Mot,Ph,Sie
	Q....3	50.03.0351	BC327-25		ITT,Ph,Sie
	Q....4	50.03.0340	BC337-25		ITT,NS,Ph,Sie
	Q....5	50.03.0497	BC550C		Sie
	Q....6	50.03.0329	WP 146		Six
	Q....7	50.03.0436	BC237B	BC547B, BC550B	ITT,Mot,Ph,Sie
	Q....8	50.03.0329	WP 146		Six
	Q....9	50.03.0350	J112F	J.12, TN00062	Se,NS,Mot
	Q....10	50.03.0350	J112F	J.12, TN00062	Se,NS,Mot
	Q....11	50.03.0329	WP 146		Six
	Q....12	50.03.1505	VN 0808M	ZTX 010BA	Fe,Six
	Q....13	50.03.0329	WP 146		Six
	Q....14	50.03.0329	WP 146		Six
	R....1	57.11.4101	100 Ohm	5%	
	R....2	58.11.6203	20 kOhm	See Note 2	
	R....3	57.11.4103	10 kOhm	2%	
	R....4	57.11.4562	5.6 kOhm	2%	
	R....5	57.11.4562	5.6 kOhm	2%	
	R....6	57.11.4331	330 Ohm	2%	
	R....7	57.11.4105	1 MOhm	2%	
	R....8	58.11.6203	20 kOhm	See Note 2	
	R....9	57.11.4101	100 Ohm	2%	
	R....10	58.11.6203	20 kOhm	See Note 2	
	R....11		not used		
	R....12		not used		

IND.	POS.NO.	PART NO.	VALUE	SPECIFICATIONS / EQUIVALENT	MANUF.
	R....13	57.11.4273	27 kOhm	5%	
	R....14	57.11.4124	120 kOhm	5%	
	R....15	58.11.6502	5 kOhm	See Note 3	
	R....16		not used		
	R....17		not used		
	R....18		not used		
	R....19		not used		
	R....20	57.11.4105	1 MOhm	2%	
	R....21	57.11.4105	1 MOhm	2%	
	R....22	57.11.4393	39 kOhm	2%	
	R....23	57.11.5335	3.3 MOhm	5%	
	R....24		not used		
	R....25		not used		
	R....26		not used		
	R....27	57.11.4103	10 kOhm	2%	
	R....28	57.11.3472	4.7 kOhm	1%	
	R....29	57.11.3102	1 kOhm	1%	
	R....30	57.99.0209	5.6 Ohm	PTC Resistor, Philips Nr. 2322 662 91005	
	R....31	57.11.4103	10 kOhm	2%	
	R....32	57.11.4104	100 kOhm	5%	
	R....33	57.11.4104	100 kOhm	2%	
	R....34	57.11.4152	1.5 kOhm	2%	
	R....35	57.11.4103	10 kOhm	2%	
	R....36	57.11.4105	1 MOhm	2%	
	R....37	57.11.4103	10 kOhm	2%	
	R....38	57.11.3472	4.7 kOhm	1%	
	R....39	57.11.4471	470 Ohm	2%	
	R....40	57.11.4152	1.5 kOhm	2%	
	R....41	57.11.4102	1 kOhm	2%	
	R....42	57.11.4104	100 kOhm	2%	
	R....43	57.11.4152	1.5 kOhm	2%	
	R....44	57.11.4683	68 kOhm	2%	
	R....45	57.11.4105	1 MOhm	2%	
	R....46	57.11.4103	10 kOhm	2%	
	R....47	57.11.4103	10 kOhm	2%	
	R....48	57.11.4392	3.9 kOhm	2%	
	R....49	57.11.4102	1 kOhm	2%	

IND.	POS.NO.	PART NO.	VALUE	SPECIFICATIONS / EQUIVALENT	MANUF.
	R....50	57.11.4103	10 kOhm	2%	
	R....51	57.11.4103	10 kOhm	2%	
	R....52	57.11.5106	10 MOhm	5%	
	R....53	57.11.3112	1.1 kOhm	1%	
	R....54	57.11.4392	3.9 kOhm	2%	
	R....55	57.11.3112	1.1 kOhm	1%	
	R....56	57.11.3202	2 kOhm	1%	
	R....57	57.11.3102	1 kOhm	1%	
	R....58	57.11.3152	1.5 kOhm	1%	
	R....59	57.11.3202	2 kOhm	1%	
	R....60	57.11.4104	100 kOhm	2%	
	R....61	57.11.4105	1 MOhm	2%	
	R....62	57.11.3152	1.5 kOhm	1%	
	R....63	57.11.5225	2.2 MOhm	5%	
	R....64	57.11.4102	1 kOhm	2%	
	R....65	57.11.4103	10 kOhm	2%	
	R....66	57.11.3102	1 kOhm	1%	
	R....67	57.11.3102	1 kOhm	1%	
	R....68		not used		
	R....69	57.11.4105	1 MOhm	2%	
	R....70	57.11.4105	1 MOhm	2%	
	R....71	57.11.4102	1 kOhm	2%	
	R....72	57.11.4221	220 Ohm	2%	
	R....73	57.11.4472	4.7 kOhm	5%	
	R....74	57.11.4681	680 Ohm	2%	
	R....75	57.11.4100	10 Ohm	2%	
	R....76	57.11.4105	1 MOhm	2%	
	R....77	57.11.4100	10 Ohm	2%	
	R....78	57.11.4821	820 Ohm	2%	
	R....79	57.11.4152	1.5 kOhm	2%	
	R....80		not used		
	R....81	57.11.4102	1 kOhm	2%	
	R....82	57.11.4470	47 Ohm	2%	
	R....83	57.11.5106	10 MOhm	5%	
	R....84	57.11.4103	10 kOhm	2%	
	R....85	57.11.4101	100 Ohm	2%	
	R....86	57.11.4104	100 kOhm	2%	

IND.	POS.NO.	PART NO.	VALUE	SPECIFICATIONS / EQUIVALENT	MANUF.
	R....87	57.11.4104	100 kOhm	2%	
	R....88	57.11.4101	100 Ohm	2%	
	R....89	57.11.4152	1.5 kOhm	2%	
	R....90	57.11.4103	10 kOhm	2%	
	R....91	57.11.4103	10 kOhm	2%	
	R....92	57.11.4102	1 kOhm	2%	
	R....93	57.11.4681	680 Ohm	2%	
	R....94	57.11.4102	1 kOhm	2%	
	R....95		not used		
	R....96	57.11.4102	1 kOhm	5%	
	R....97	57.11.3242	2.4 kOhm	5%	
	R....98	57.11.4105	1 MOhm	2%	
	R....99	57.11.5106	10 MOhm	5%	
	R....100	57.11.5106	10 MOhm	5%	
	R....101	57.11.5475	4.7 MOhm	5%	
	R....102	57.11.4101	100 Ohm	5%	
	R....103	57.11.5475	4.7 MOhm	5%	
	R....104	57.11.4472	4.7 kOhm	5%	
	R....105	57.11.4272	2.7 kOhm	5%	
	R....106	57.11.4270	27 Ohm	5%	
	T....1	1.022.218.00		Input Transformer 1:1	St
	T....2	1.022.215.00		Time Code Output Transformer	St
	T....3	1.022.221.00		Time Code HF Transformer	St

IND.	POS.NO.	PART NO.	VALUE	SPECIFICATIONS / EQUIVALENT	MANUF.

(01) 86.11.27 IC 11 to 14, 16 and 17: slew rate > 40V/us

Note 1: Contact pin: Studer Nr. 54.01.0020
Berg Nr. 75 160-10-36
Philips Nr. 2422 025 59303
Bridge: Studer Nr. 54.01.0021
Comastel Nr. 313.1365.000 408
Philips Nr. 2422 024 68003

Note 2: Potentiometer, linear, Bourns Nr. 3329 H - 1 - 203
VEB Nr. 170 - 20k
Lesa Nr. 170 - 20k

Note 3: Potentiometer, linear, Bourns Nr. 3329 H - 1 - 502
VEB Nr. 170 - 5k
Lesa Nr. 170 - 5k

Ce=Ceramic, Sal=Solid Aluminium

MANUFACTURER: Ex=Exar, Fe=Fairchild, Fe=Ferranti,
GI=General Instruments, ITT=Intersatall,
Mot=Motorola, NS=National Semiconductors,
Ph=Philips, Ra=Raytheon, RCA=Radio Corp. of America,
Sem=Semtech, Sie=Siemens, Sig=Signetics, St=Studer,
Six=Siliconix, TS=Teledyne Semiconductors,
Tf=Telefunken, TI=Texas Instruments

ORIG 86/06/02 (01) 86/11/27

TIME CODE READ–WRITE UNIT 1.820.721.86

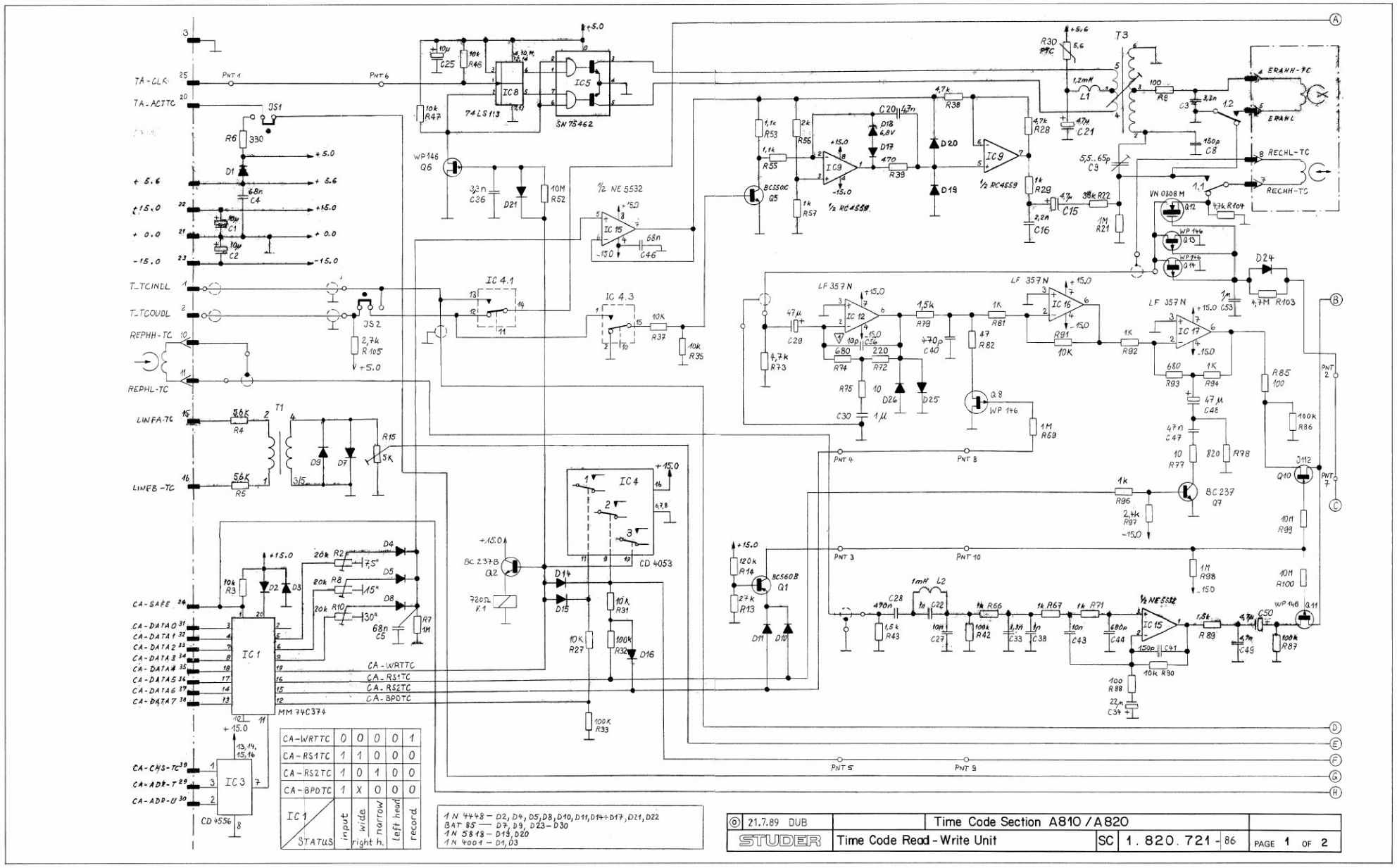

TIME CODE READ–WRITE UNIT 1.820.721.86

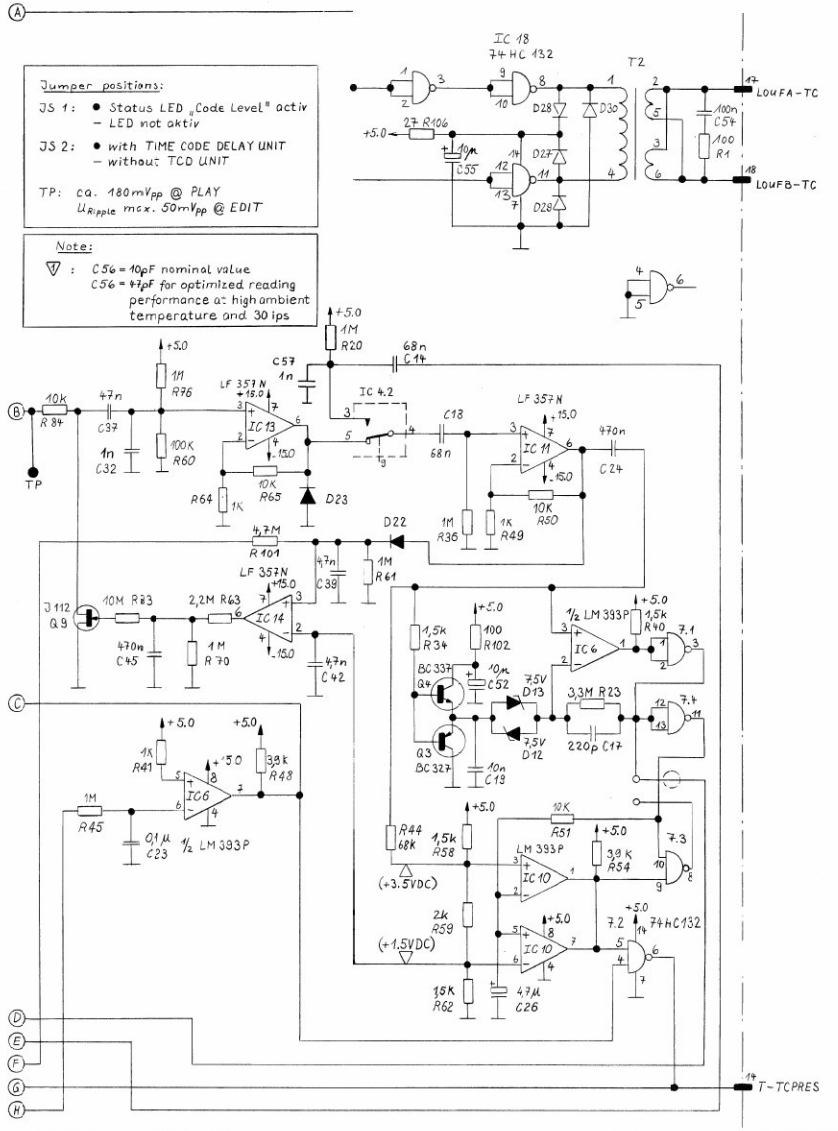

© 21.7.89 DUB		Time Code Section A 810 / A 820		
STUDER	Time Code Read-Write Unit	SC	1.820.721-86	PAGE 2 OF 2

TIME CODE READ–WRITE UNIT 1.820.721.86

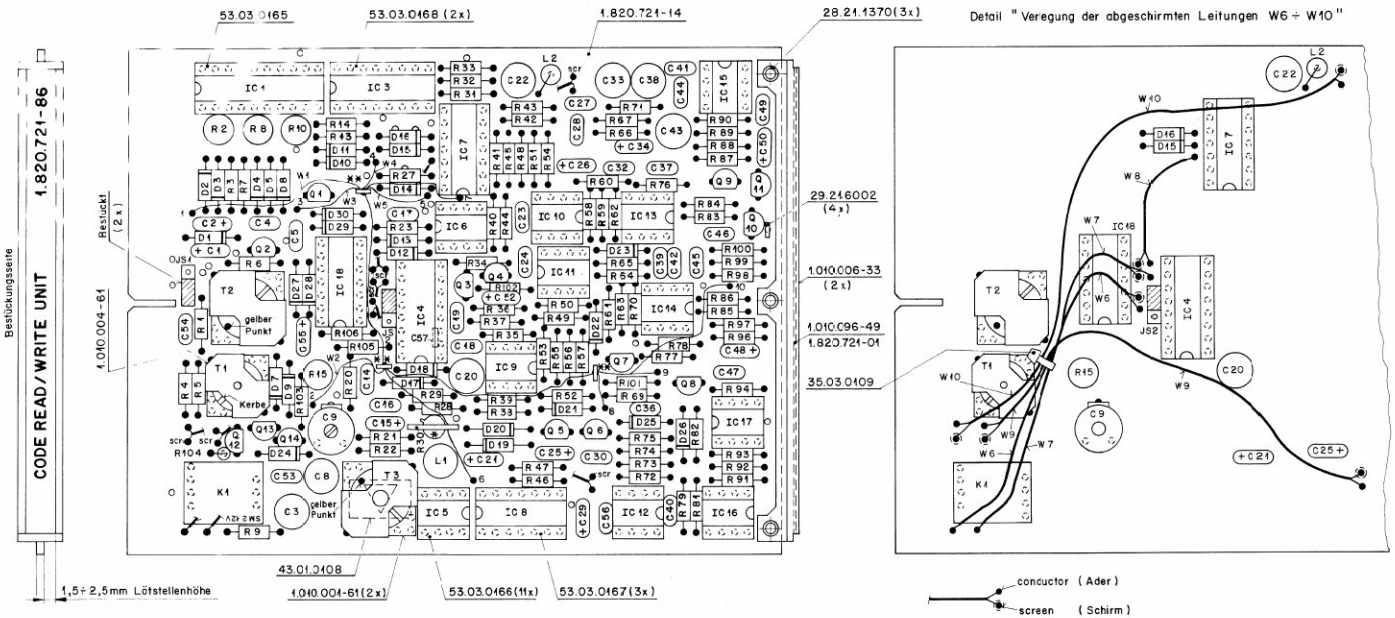

* 5C.03.9914

** W1 ÷ W5 durch Lötösen 29.21.6002 hindurchgeführt

Drahtverbindungen

Nr.	Punkt ◄ ► Punkt	Norm Nr.	Verarbeitung Abschneidelänge	Verarbeitung Abisolierung
W1	1 ◄ ► 6	1.010.115-64		
W2	2 ◄ ► 7	1.010.113-64		
W3	3 ◄ ► 10	1.010.118-64		
W4	4 ◄ ► 8	1.010.115-64		
W5	5 ◄ ► 9	1.010.116-64		
W6		64.03.0186	95 mm	Bild 1
W7		64.03.0186	90 mm	Bild 1
W8		64.03.0186	40 mm	Bild 1
W9		64.03.0186	115 mm	Bild 2
W10		64.03.0186	130 mm	Bild 2

Schirm bündig mit Mantel

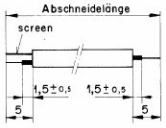

Bild 1

Toleranzen: ± 1,0

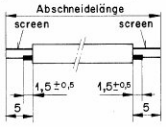

Bild 2

TIME CODE READ–WRITE UNIT 1.820.721.86

IND.	POS.NO.	PART NO.	VALUE	SPECIFICATIONS / EQUIVALENT	MANUF.
	C....1	59.26.2100	10 uF	20%, 16V, Sal	Ph,Ri
	C....2	59.26.2100	10 uF	20%, 16V, Sal	Ph,Ri
	C....3	59.05.1332	3.3 nF	2.5%	
	C....4	59.06.0683	68 nF	10%	
	C....5	59.06.0683	68 nF	10%	
	C....6		not used		
	C....7		not used		
	C....8	59.05.2151	150 pF	2.5%	
	C....9	59.18.0102	65 pF	Trimmer Capacitor, Philips Nr 2222 808 01001	
	C....10		not used		
	C....11		not used		
	C....12		not used		
	C....13		not used		
	C....14	59.06.0683	68 nF	10%	
	C....15	59.26.5479	4.7 uF	20%, 25V, Sal	Ph,Ri
	C....16	59.06.0222	2.2 nF	10%	
	C....17	59.34.4221	220 pF	5%, Cer	
	C....18	59.06.0683	68 nF	10%	
	C....19	59.06.0103	10 nF	10%	
	C....20	59.05.2472	4.7 nF	2.5%	
	C....21	59.26.0470	47 uF	20%, 5.3V, Sal	Ph,Ri
	C....22	59.05.1102	1 nF	1%	
	C....23	59.06.0104	100 nF	10%	
	C....24	59.06.0474	470 nF	10%	
	C....25	59.26.2100	10 uF	20%, 16V, Sal	Ph,Ri
	C....26	59.26.5479	4.7 uF	20%, 25V, Sal	Ph,Ri
	C....27	59.06.0103	10 nF	10%	
	C....28	59.06.0474	470 nF	10%	
	C....29	59.26.0470	47 uF	20%, 5.3V, Sal	Ph,Ri
	C....30	59.06.5105	1 uF	5%	
	C....31		not used		
	C....32	59.06.5102	1 nF	10%	
	C....33	59.05.1332	3.3 nF	1%	
	C....34	59.26.1220	22 uF	20%, 10V, Sal	Ph,Ri
	C....35		not used		
	C....36	59.06.0332	3.3 nF	10%	
	C....37	59.06.0473	47 nF	10%	

IND.	POS.NO.	PART NO.	VALUE	SPECIFICATIONS / EQUIVALENT	MANUF.
	C....38	59.05.1102	1 nF	1%	
	C....39	59.06.0472	4.7 nF	10%	
	C....40	59.32.2471	470 pF	10%	
	C....41	59.34.4151	150 pF	5%, Cer	
	C....42	59.06.0472	4.7 nF	10%	
	C....43	59.05.1103	10 nF	1%	
	C....44	59.32.2681	680 pF	10%, Cer	
	C....45	59.06.0474	470 nF	10%	
	C....46	59.06.0683	68 nF	10%	
	C....47	59.06.0473	47 nF	10%	
	C....48	59.26.0470	47 uF	20%, 6.3V, Sal	Ph,Ri
	C....49	59.06.0472	4.7 nF	10%	
	C....50	59.26.5479	4.7 uF	20%, 25V, Sal	Ph,Ri
	C....51		not used		
	C....52	59.26.1100	10 uF	20%, 10V, Sal	Ph,Ri
	C....53	59.06.5105	1 uF	5%	
	C....54	59.06.0104	100 nF	10%	
	C....55	59.26.1100	10 uF	20%, 10V, Sal	Ph,Ri
	C....56	59.34.1100	10 pF	5%, Cer	
	C....57	59.60.0102	1 nF	5%, Cer, Chip	
	D....1	50.04.0122	1N4001	1N4002, 1N4003, 1N4004	Mot,GI,Sol
	D....2	50.04.0125	1N4448		Fe,ITT,Ph,Sem
	D....3	50.04.0122	1N4001	1N4002, 1N4003, 1N4004	Mot,GI,Sol
	D....4	50.04.0125	1N4448		Fe,ITT,Ph,Sem
	D....5	50.04.0125	1N4448		Fe,ITT,Ph,Sem
	D....6		not used		
	D....7	50.04.0127	BAT 85	BAS 40-02	Ph,Sie
	D....8	50.04.0125	1N4448		Fe,ITT,Ph,Sem
	D....9	50.04.0127	BAT 85	BAS 40-02	Ph,Sie
	D....10	50.04.0125	1N4448		Fe,ITT,Ph,Sem
	D....11	50.04.0125	1N4448		Fe,ITT,Ph,Sem
	D....12	50.04.1103	7.5 V Z	BZX83C 7V5, BZX55C 7V5, ZPD 7.5	Sem,ITT
	D....13	50.04.1103	7.5 V Z	BZX83C 7V5, BZX55C 7V5, ZPD 7.5	Sem,ITT
	D....14	50.04.0125	1N4448		Fe,ITT,Ph,Sem
	D....15	50.04.0125	1N4448		Fe,ITT,Ph,Sem
	D....16	50.04.0125	1N4448		Fe,ITT,Ph,Sem

IND.	POS.NO.	PART NO.	VALUE	SPECIFICATIONS / EQUIVALENT	MANUF.
	D....17	50.04.0125	1N4448		Fe,ITT,Ph,Sem
	D....18	50.04.1102	6.8 V Z	BZX83C 6V8, BZX55C 6V8, ZPD 6.8	Sem,ITT
	D....19	50.04.0512	1N5818	1N5819	Mot
	D....20	50.04.0512	1N5818	1N5819	Mot
	D....21	50.04.0125	1N4448		Fe,ITT,Ph,Sem
	D....22	50.04.0125	1N4448		Fe,ITT,Ph,Sem
	D....23	50.04.0127	BAT 85	BAS 40-02	Ph,Sie
	D....24	50.04.0127	BAT 85	BAS 40-02	Ph,Sie
	D....25	50.04.0127	BAT 85	BAS 40-02	Ph,Sie
	D....26	50.04.0127	BAT 85	BAS 40-02	Ph,Sie
	D....27	50.04.0127	BAT 85	BAS 40-02	Ph,Sie
	D....28	50.04.0127	BAT 85	BAS 40-02	Ph,Sie
	D....29	50.04.0127	BAT 85	BAS 40-02	Ph,Sie
	D....30	50.04.0127	BAT 85	BAS 40-02	Ph,Sie
	IC....1	50.07.0003	MM74C374N		NSC
	IC....2		not used		
	IC....3	50.07.0004	MC14556CP	CD4556BE, 4556BPC	Fe,Mot,RCA
	IC....4	50.07.0015	MC14053P	CD4053BCN	Mot,NSC
	IC....5	50.05.0227	SN75462P	SN75472P, SN75462JG	TI
	IC....6	50.05.0283	LM393N	LM393	NSC,TI
	IC....7	50.17.1132	MC74HC132	PC74HC132 MM74HC132	Mot,Ph,NS
	IC....8	50.06.0113	SN74LS113N	N74LS113N, DN74LS113N	TI,Sig,NSC
	IC....9	50.09.0107	HC4559BP		Ha
	IC....10	50.05.0283	LM393N	LM393	NSC,TI
	IC....11	50.09.0110	LF357 A	Slew rate >40V/lus	NS
	IC....12	50.09.0110	LF357 A	Slew rate >40V/lus	NS
	IC....13	50.09.0110	LF357 A	Slew rate >40V/lus	NS
	IC....14	50.09.0110	LF357 A	Slew rate >40V/lus	NS
	IC....15	50.09.0106	NE5532AN	NE5532AN, 5532ANS	Sig,Ex,Ha
	IC....16	50.09.0110	LF357 A	Slew rate >40V/lus	NS
	IC....17	50.09.0110	LF357 A	Slew rate >40V/lus	NS
	IC....18	50.17.1132	MC74HC132	PC74HC132 MM74HC132	Mot,Ph,NS
	JB....1			See Note 1	
	JS....2			See Note 1	

IND.	POS.NO.	PART NO.	VALUE	SPECIFICATIONS / EQUIVALENT	MANUF.
	K....1	56.04.0171	SM 21012		ITT
	L....1	62.02.2122	1.2 mH	TDE Nr. CSL 0812-122 J	
	L....2	62.01.0128	1 mH	Gewanda Nr. 17-104, Delevan Nr. 1641-105	
	Q....1	50.03.0496	BC560C		Sie
	Q....2	50.03.0436	BC237B	BC547B, BC550B	ITT,Mot,Ph,Sie
	Q....3	50.03.0351	BC327-25		ITT,Ph,Sie
	Q....4	50.03.0340	BC337-25		ITT,NS,Ph,Sie
	Q....5	50.03.0497	BC550C		Sie
	Q....6	50.03.0329	WP 146		Six
	Q....7	50.03.0436	BC237B	BC547B, BC550B	ITT,Mot,Ph,Sie
	Q....8	50.03.0329	WP 146		Six
	Q....9	50.03.0350	J112F	J112, TN00062	Se,NS,Mot
	Q....10	50.03.0350	J112F	J112, TN00062	Se,NS,Mot
	Q....11	50.03.0329	WP 146		Six
	Q....12	50.03.1505	VN 0808K	ZVN 0108A	Fa,Six
	Q....13	50.03.0329	WP 146		Six
	Q....14	50.03.0329	WP 146		Six
	R....1	57.11.4101	100 Ohm	5%	
	R....2	58.11.6203	20 kOhm	See Note 2	
	R....3	57.11.4103	10 kOhm	2%	
	R....4	57.11.4562	5.6 kOhm	2%	
	R....5	57.11.4562	5.6 kOhm	2%	
	R....6	57.11.4331	330 Ohm	2%	
	R....7	57.11.4105	1 MOhm	2%	
	R....8	58.11.6203	20 kOhm	See Note 2	
	R....9	57.11.4101	100 Ohm	2%	
	R....10	58.11.6203	20 kOhm	See Note 2	
	R....11		not used		
	R....12		not used		
	R....13	57.11.4273	27 kOhm	5%	
	R....14	57.11.4124	120 kOhm	5%	
	R....15	58.11.6502	5 kOhm	See Note 3	
	R....16		not used		
	R....17		not used		

IND.	POS.NO.	PART NO.	VALUE	SPECIFICATIONS / EQUIVALENT	MANUF.
	R....18		not used		
	R....19		not used		
	R....20	57.11.4105	1 MOhm	2%	
	R....21	57.11.4105	1 MOhm	2%	
	R....22	57.11.4393	39 kOhm	2%	
	R....23	57.11.5335	3.3 MOhm	5%	
	R....24		not used		
	R....25		not used		
	R....26		not used		
	R....27	57.11.4103	10 kOhm	2%	
	R....28	57.11.3472	4.7 kOhm	1%	
	R....29	57.11.3102	1 kOhm	1%	
	R....30	57.99.0209	5.6 Ohm	PTC Resistor, Philips Nr. 2322 662 91005	
	R....31	57.11.4103	10 kOhm	2%	
	R....32	57.11.4104	100 kOhm	5%	
	R....33	57.11.4104	100 kOhm	2%	
	R....34	57.11.4152	1.5 kOhm	2%	
	R....35	57.11.4103	10 kOhm	2%	
	R....36	57.11.4105	1 MOhm	2%	
	R....37	57.11.4103	10 kOhm	2%	
	R....38	57.11.3472	4.7 kOhm	1%	
	R....39	57.11.4471	470 Ohm	2%	
	R....40	57.11.4152	1.5 kOhm	2%	
	R....41	57.11.4102	1 kOhm	2%	
	R....42	57.11.4104	100 kOhm	2%	
	R....43	57.11.4152	1.5 kOhm	2%	
	R....44	57.11.4683	68 kOhm	2%	
	R....45	57.11.4105	1 MOhm	2%	
	R....46	57.11.4103	10 kOhm	2%	
	R....47	57.11.4103	10 kOhm	2%	
	R....48	57.11.4392	3.9 kOhm	2%	
	R....49	57.11.4102	1 kOhm	2%	
	R....50	57.11.4103	10 kOhm	2%	
	R....51	57.11.4103	10 kOhm	2%	
	R....52	57.11.5106	10 MOhm	5%	
	R....53	57.11.3112	1.1 kOhm	1%	
	R....54	57.11.4392	3.9 kOhm	2%	

IND.	POS.NO.	PART NO.	VALUE	SPECIFICATIONS / EQUIVALENT	MANUF.
	R....55	57.11.3112	1.1 kOhm	1%	
	R....56	57.11.3202	2 kOhm	1%	
	R....57	57.11.3102	1 kOhm	1%	
	R....58	57.11.3152	1.5 kOhm	1%	
	R....59	57.11.3202	2 kOhm	1%	
	R....60	57.11.4104	100 kOhm	2%	
	R....61	57.11.4105	1 MOhm	2%	
	R....62	57.11.3152	1.5 kOhm	1%	
	R....63	57.11.5225	2.2 MOhm	5%	
	R....64	57.11.4102	1 kOhm	2%	
	R....65	57.11.4103	10 kOhm	2%	
	R....66	57.11.3102	1 kOhm	1%	
	R....67	57.11.3102	1 kOhm	1%	
	R....68		not used		
	R....69	57.11.4105	1 MOhm	2%	
	R....70	57.11.4105	1 MOhm	2%	
	R....71	57.11.4102	1 kOhm	2%	
	R....72	57.11.4221	220 Ohm	2%	
	R....73	57.11.4472	4.7 kOhm	5%	
	R....74	57.11.4681	680 Ohm	2%	
	R....75	57.11.4100	10 Ohm	2%	
	R....76	57.11.4105	1 MOhm	2%	
	R....77	57.11.4100	10 Ohm	2%	
	R....78	57.11.4821	820 Ohm	2%	
	R....79	57.11.4152	1.5 kOhm	2%	
	R....80		not used		
	R....81	57.11.4102	1 kOhm	2%	
	R....82	57.11.4470	47 Ohm	2%	
	R....83	57.11.5106	10 MOhm	5%	
	R....84	57.11.4103	10 kOhm	2%	
	R....85	57.11.4101	100 Ohm	2%	
	R....86	57.11.4104	100 kOhm	2%	
	R....87	57.11.4104	100 kOhm	2%	
	R....88	57.11.4101	100 Ohm	2%	
	R....89	57.11.4152	1.5 kOhm	2%	
	R....90	57.11.4103	10 kOhm	2%	
	R....91	57.11.4103	10 kOhm	2%	

IND.	POS.NO.	PART NO.	VALUE	SPECIFICATIONS / EQUIVALENT	MANUF.
	R....92	57.11.4102	1 kOhm	2%	
	R....93	57.11.4681	680 Ohm	2%	
	R....94	57.11.4102	1 kOhm	2%	
	R....95		not used		
	R....96	57.11.4102	1 kOhm	2%	
	R....97	57.11.3242	2.4 kOhm	2%	
	R....98	57.11.4105	1 MOhm	2%	
	R....99	57.11.5106	10 MOhm	2%	
	R...100	57.11.5106	10 MOhm	2%	
	R...101	57.11.5475	4.7 MOhm	2%	
	R...102	57.11.4101	100 Ohm	2%	
	R...103	57.11.5475	4.7 MOhm	2%	
	R...104	57.11.4472	4.7 kOhm	2%	
	R...105	57.11.4272	2.7 kOhm	2%	
	R...106	57.11.4270	27 Ohm	2%	
	T....1	1.022.218.00		Input Transformer 1:1	St
	T....2	1.022.215.00		Tire Code Output Transformer	St
	T....3	1.022.221.00		Tire Code HF Transformer	St

Note 1: Contact pin: Studer Nr. 54.01.0020
Berg Nr. 75 .60-102-36
Philips Nr. 2422 025 99303
Bridge: Studer Nr. 54.01.0021
Cossatel Nr. 313.1365.00 408
Philips Nr. 2422 024 88003

Note 2: Potentiometer, linear, Bourns Nr. 3329 H - 1 - 203
VEB Nr. 170 - 20k
Lesa Nr. 170 - 20k

Note 3: Potentiometer, linear, Bourns Nr. 3329 H - 1 - 502
VEB Nr. 170 - 5k
Lesa Nr. 170 - 5k

Cer=Ceramic, Sal=Solid Aluminum

MANUFACTURER: Ex=Exar, Fa=Fairchild, Fe=Ferrant.,
GI=General Instruments, ITT=Intermetall,
Mot=Motorola, NS=National Semiconductors,
Ph=Philips, Ra=Raytheon, RCA=Radio Corp. of America,
Sem=Semicoss, Sie=Siemens, Sig=Signetics, St=Studer,
Six=Siliconix, TS=Teledyne Semiconductors,
Tf=Telefunken, TI=Texas Instruments

ORIS 89/07/21

TIME CODE READ–WRITE UNIT 1.820.721.87 GR20 EL06

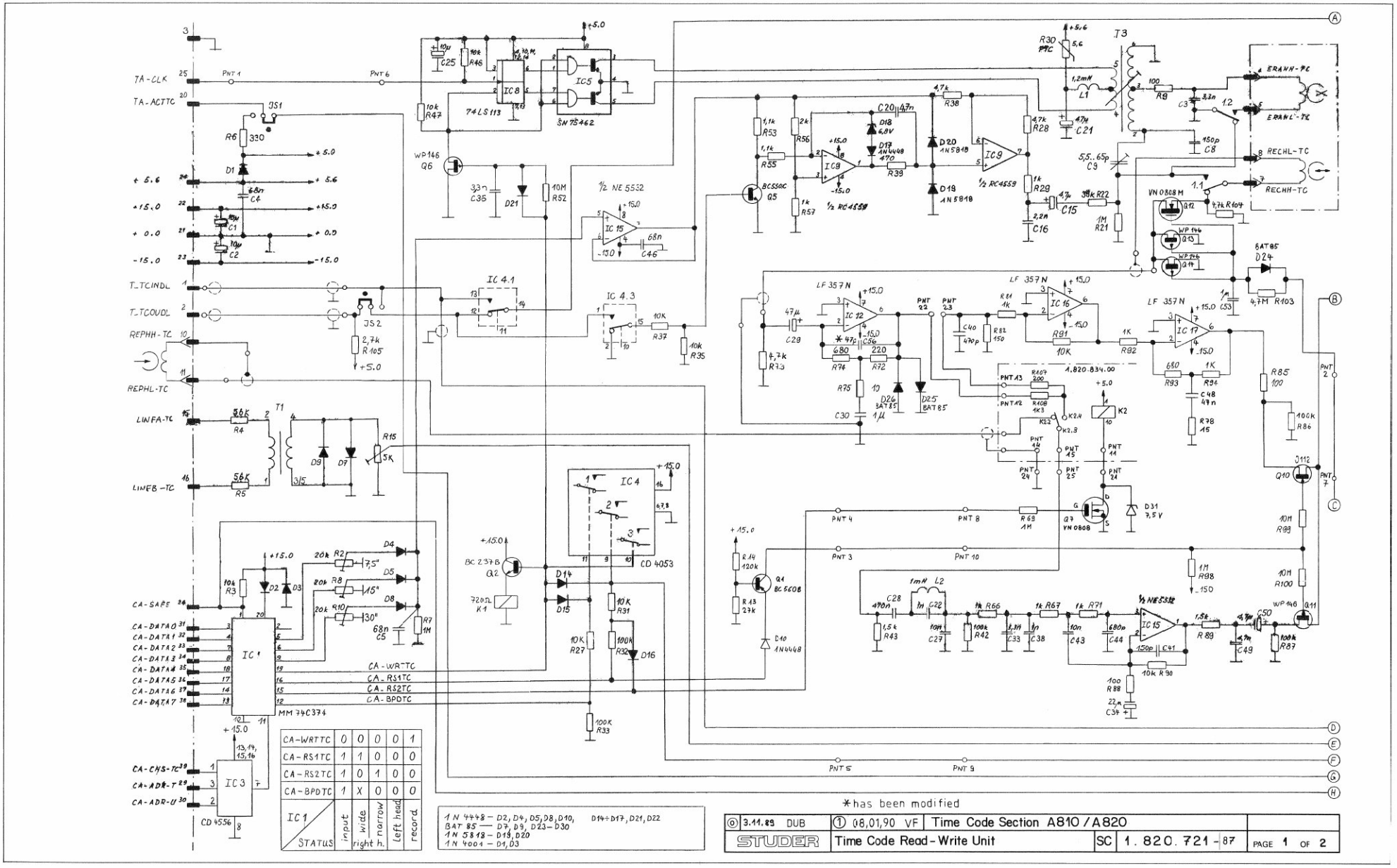

TIME CODE READ–WRITE UNIT 1.820.721.87

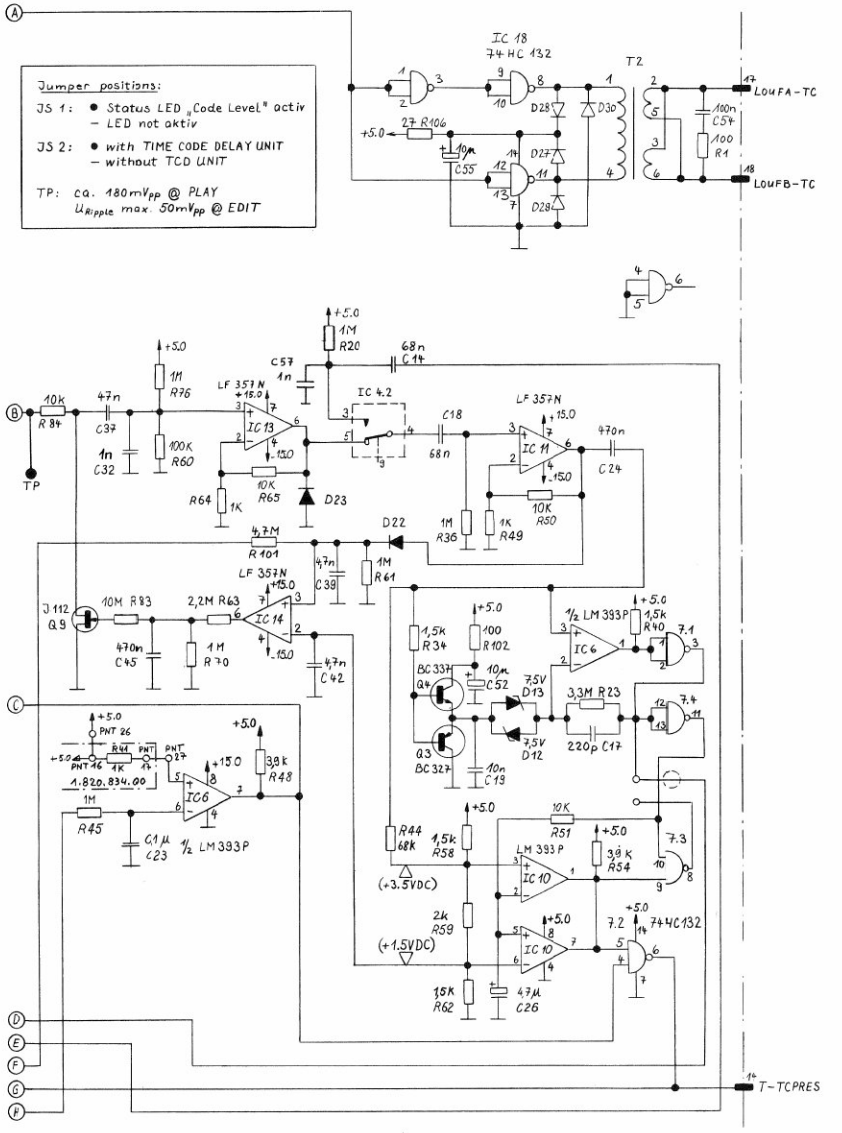

ⓒ 3.11.89 DUB	① 08.01.90 VF	Time Code Section A 810 / A 820		
STUDER	Time Code Read-Write Unit	SC	1.820.721-87	PAGE 2 OF 2

TIME CODE READ–WRITE UNIT 1.820.721.87

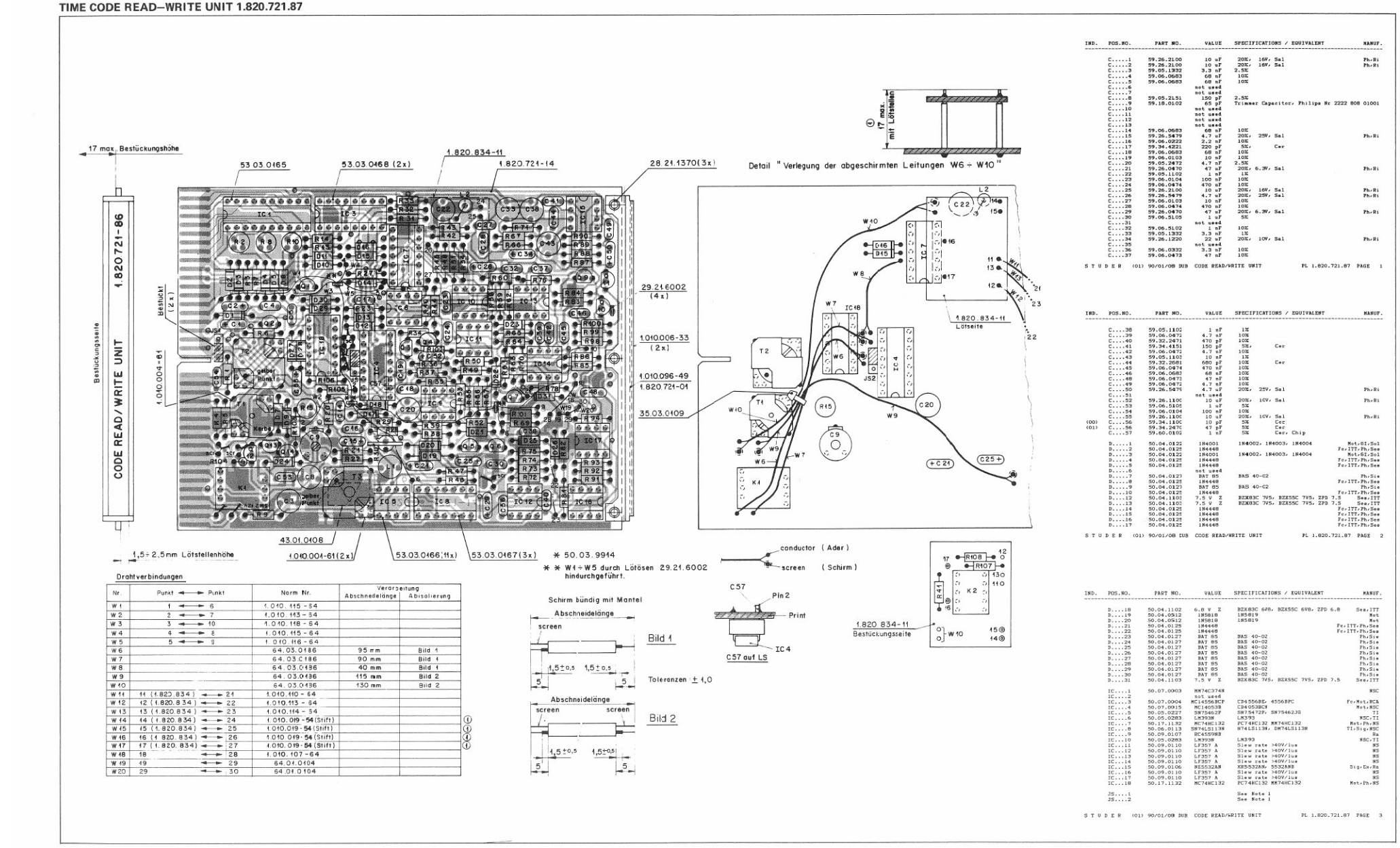

Drahtverbindungen

Nr.	Punkt		Punkt	Norm Nr.	Verarbeitung Abschnedelänge	Abisolierung
W 1	1	◄—►	6	1.010.115-54		
W 2	2	◄—►	7	1.010.113-54		
W 3	3	◄—►	10	1.010.118-64		
W 4	4	◄—►	8	1.010.115-64		
W 5	5	◄—►	9	1.010.116-64		
W 6				64.03.0186	95 mm	Bild 1
W 7				64.03.C186	90 mm	Bild 1
W 8				64.03.0436	40 mm	Bild 1
W 9				64.03.0436	115 mm	Bild 2
W 10				64.03.0436	130 mm	Bild 2
W 11	11 (1.820.834)	◄—►	21	1.010.110-64		
W 12	12 (1.820.834)	◄—►	22	1.010.113-64		
W 13	13 (1.820.834)	◄—►	23	1.010.114-54		
W 14	14 (1.820.834)	◄—►	24	1.010.019-54 (Stift)		①
W 15	15 (1.820.834)	◄—►	25	1.010.019-54 (Stift)		①
W 16	16 (1.820.834)	◄—►	26	1.010.019-54 (Stift)		①
W 17	17 (1.820.834)	◄—►	27	1.010.019-54 (Stift)		①
W 18	18	◄—►	28	1.010.107-64		
W 19	19	◄—►	29	64.01.0104		
W 20	29	◄—►	30	64.01.0104		

IND.	POS.NO.	PART NO.	VALUE	SPECIFICATIONS / EQUIVALENT	MANUF.
	C.....1	59.26.2100	10 uF	20%, 16V, Sal	Ph.Ri
	C.....2	59.26.2100	10 uF	20%, 16V, Sal	Ph.Ri
	C.....3	59.05.1332	3.3 nF	2.5%	
	C.....4	59.06.0683	68 nF	10%	
	C.....5	59.06.0683	68 nF	10%	
	C.....6		not used		
	C.....7		not used		
	C.....8	59.05.2151	150 pF	2.5%	
	C.....9	59.18.0102	65 pF	Trimmer Capacitor, Philips Nr 2222 808 01001	
	C.....10		not used		
	C.....11		not used		
	C.....12		not used		
	C.....13		not used		
	C.....14	59.06.0683	68 nF	10%	
	C.....15	59.26.5479	4.7 uF	20%, 25V, Sal	Ph.Ri
	C.....16	59.06.0222	2.2 nF	10%	
	C.....17	59.34.4221	220 pF	5%, Cer	
	C.....18	59.06.0683	68 nF	10%	
	C.....19	59.06.0103	10 nF	10%	
	C.....20	59.05.2472	4.7 nF	2.5%	
	C.....21	59.26.0470	47 uF	20%, 6.3V, Sal	Ph.Ri
	C.....22	59.05.1102	1 nF	1%	
	C.....23	59.06.0104	100 nF	10%	
	C.....24	59.06.0474	470 nF	10%	
	C.....25	59.26.2100	10 uF	20%, 16V, Sal	Ph.Ri
	C.....26	59.26.5479	4.7 uF	20%, 25V, Sal	Ph.Ri
	C.....27	59.06.0103	10 nF	10%	
	C.....28	59.06.0474	470 nF	10%	
	C.....29	59.26.0470	47 uF	20%, 6.3V, Sal	Ph.Ri
	C.....30	59.06.5105	1 uF	5%	
	C.....31		not used		
	C.....32	59.06.5102	1 nF	10%	
	C.....33	59.05.1332	3.3 nF	1%	
	C.....34	59.26.1220	22 uF	20%, 10V, Sal	Ph.Ri
	C.....35		not used		
	C.....36	59.06.0332	3.3 nF	10%	
	C.....37	59.06.0473	47 nF	10%	

S T U D E R (01) 90/01/08 BUB CODE READ/WRITE UNIT PL 1.820.721.87 PAGE 1

IND.	POS.NO.	PART NO.	VALUE	SPECIFICATIONS / EQUIVALENT	MANUF.
	C.....38	59.05.1102	1 nF	1%	
	C.....39	59.06.0472	4.7 nF	10%	
	C.....40	59.32.2471	470 pF	10%	
	C.....41	59.34.4151	150 pF	5%, Cer	
	C.....42	59.06.0472	4.7 nF	10%	
	C.....43	59.05.1102	10 nF	1%	
	C.....44	59.32.2681	680 pF	10%, Cer	
	C.....45	59.06.0474	470 nF	10%	
	C.....46	59.06.0682	68 nF	10%	
	C.....48	59.06.0473	47 nF	10%	
	C.....49	59.06.0472	4.7 nF	10%	
	C.....50	59.26.5475	4.7 uF	20%, 25V, Sal	Ph.Ri
	C.....51		not used		
	C.....52	59.26.1100	10 uF	20%, 10V, Sal	Ph.Ri
	C.....53	59.06.5105	1 uF	5%	
	C.....54	59.06.0104	100 nF	10%	
	C.....55	59.26.1100	10 uF	20%, 10V, Sal	Ph.Ri
(00)	C.....56	59.34.1100	10 pF	5%, Cer	
(01)	C.....56	59.34.2470	47 pF	5%, Cer	
	C.....57	59.60.0102	1 nF	5%, Cer, Chip	
	D.....1	50.04.0125	1N4001	1N4002, 1N4003, 1N4004	Mot/GI/Sel
	D.....2	50.04.0125	1N4448		Fe/ITT/Ph/Sea
	D.....3	50.04.0122	1N4001	1N4002, 1N4003, 1N4004	Mot/GI/Sel
	D.....4	50.04.0125	1N4448		Fe/ITT/Ph/Sea
	D.....5	50.04.0125	1N4448		Fe/ITT/Ph/Sea
	D.....6		not used		
	D.....7	50.04.0127	BAT 85	BAS 40-02	Ph/Sie
	D.....8	50.04.0125	1N4448		Fe/ITT/Ph/Sea
	D.....9	50.04.0127	BAT 85	BAS 40-02	Ph/Sie
	D.....10	50.04.0125	1N4448		Fe/ITT/Ph/Sea
	D.....12	50.04.1101	7.5 V Z	BZX83C 7V5, BZX55C 7V5, ZPD 7.5	Sea/ITT
	D.....13	50.04.1101	7.5 V Z	BZX83C 7V5, BZX55C 7V5, ZPD 7.5	Sea/ITT
	D.....14	50.04.0125	1N4448		Fe/ITT/Ph/Sea
	D.....15	50.04.0125	1N4448		Fe/ITT/Ph/Sea
	D.....16	50.04.0125	1N4448		Fe/ITT/Ph/Sea
	D.....17	50.04.0125	1N4448		Fe/ITT/Ph/Sea

S T U D E R (01) 90/01/08 BUB CODE READ/WRITE UNIT PL 1.820.721.87 PAGE 2

IND.	POS.NO.	PART NO.	VALUE	SPECIFICATIONS / EQUIVALENT	MANUF.
	D.....18	50.04.1102	6.8 V Z	BZX83C 6V8, BZX55C 6V8, ZPD 6.8	Sea/ITT
	D.....19	50.04.0512	1N5818	1N5819	Mot
	D.....20	50.04.0512	1N5818	1N5819	Mot
	D.....21	50.04.0125	1N4448		Fe/ITT/Ph/Sea
	D.....22	50.04.0125	1N4448		Fe/ITT/Ph/Sea
	D.....23	50.04.0127	BAT 85	BAS 40-02	Ph/Sie
	D.....24	50.04.0127	BAT 85	BAS 40-02	Ph/Sie
	D.....25	50.04.0127	BAT 85	BAS 40-02	Ph/Sie
	D.....26	50.04.0127	BAT 85	BAS 40-02	Ph/Sie
	D.....27	50.04.0127	BAT 85	BAS 40-02	Ph/Sie
	D.....28	50.04.0127	BAT 85	BAS 40-02	Ph/Sie
	D.....29	50.04.0127	BAT 85	BAS 40-02	Ph/Sie
	D.....30	50.04.0127	BAT 85	BAS 40-02	Ph/Sie
	D.....31	50.04.1103	7.5 V Z	BZX83C 7V5, BZX55C 7V5, ZPD 7.5	Sea/ITT
	IC....1	50.07.0003	MM74C374N		NSC
	IC....2		not used		
	IC....3	50.07.0004	MC145568CF	CD4556BE, 4556BFC	Fe/Mot/RCA
	IC....4	50.07.0015	MC14053B	CD4053BCN	Mot/NSC
	IC....5	50.05.0227	SN75462P	SN75472P, SN75462JG	TI
	IC....6	50.05.0283	LM393N	LM393	NSC/TI
	IC....7	50.17.1132	MC74HC132	FC74HC132 MM74HC132	Mot/Ph/NS
	IC....8	50.06.0113	SN74LS113N	N74LS113N, DM74LS113N	TI/Sig/NSC
	IC....9	50.09.0107	RC4559NB		Ra
	IC....10	50.05.0283	LM393N	LM393	NSC/TI
	IC....11	50.09.0110	LF357 A	Slew rate >40V/us	NS
	IC....12	50.09.0110	LF357 A	Slew rate >40V/us	NS
	IC....13	50.09.0110	LF357 A	Slew rate >40V/us	NS
	IC....14	50.09.0110	LF357 A	Slew rate >40V/us	NS
	IC....15	50.09.0106	NE5532AN	XE5532AN, 5532AN8	Sig/Ex/Ra
	IC....16	50.09.0110	LF357 A	Slew rate >40V/us	NS
	IC....17	50.09.0110	LF357 A	Slew rate >40V/us	NS
	IC....18	50.17.1132	MC74HC132	FC74HC132 MM74HC132	Mot/Ph/NS
	JS....1			See Note 1	
	JS....2			See Note 1	

S T U D E R (01) 90/01/08 BUB CODE READ/WRITE UNIT PL 1.820.721.87 PAGE 3

TIME CODE READ–WRITE UNIT 1.820.721.87

IND.	POS.NO.	PART NO.	VALUE	SPECIFICATIONS / EQUIVALENT	MANUF
	I.....1	56.04.0171	SN D1012		ITT
	I.....2	56.04.0195	TG2		
	L.....1	62.02.2122	1.2 mH	TDK Nr. CSL 0812-122 J	
	L.....2	62.01.0128	1 mH	Gewanda Nr. 17-104, Delevan Nr. 1641-105	
	Q.....1	50.03.0496	BC560C		Sie
	Q.....2	50.03.0436	BC237B	BC547B, BC550B	ITT,Mot,Fh,Sie
	Q.....3	50.03.0351	BC327-25		ITT,Fh,Sie
	Q.....4	50.03.0340	BC337-25		ITT,NS,Fh,Sie
	Q.....5	50.03.0497	BC550C		Sie
	Q.....6	50.03.0329	WF 146		Sie
	Q.....7	50.03.1505	VN 0808M	ZVN 3108A	Fe,Sie
	Q.....9	50.03.0350	J112F	J112, TM00062	Se,NS,Mot
	Q.....10	50.03.0350	J112F	J112, TM00062	Se,NS,Mot
	Q.....11	50.03.0329	WF 146		Sie
	Q.....12	50.03.1505	VN 0808M	ZVN 3108A	Fe,Sie
	Q.....13	50.03.0329	WF 146		Sie
	Q.....14	50.03.0329	WF 146		Sie
	R.....1	57.11.3101	100 Ohm	5%	
	R.....2	58.11.6203	20 kOhm	See Note 2	
	R.....3	57.11.3103	10 kOhm	2%	
	R.....4	57.11.3562	5.6 kOhm	2%	
	R.....5	57.11.3562	5.6 kOhm	2%	
	R.....6	57.11.3331	330 Ohm	2%	
	R.....7	57.11.3105	1 MOhm	2%	
	R.....8	58.11.6203	20 kOhm	See Note 2	
	R.....9	57.11.3101	100 Ohm	2%	
	R....10	58.11.6203	20 kOhm	See Note 2	
	R....11		not used		
	R....12		not used		
	R....13	57.11.3273	27 kOhm	5%	
	R....14	57.11.3124	120 kOhm	5%	
	R....15	58.11.6502	5 kOhm	See Note 3	
	R....16		not used		
	R....17		not used		

IND.	POS.NO.	PART NO.	VALUE	SPECIFICATIONS / EQUIVALENT	MANUF.
	R....18		not used		
	R....19		not used		
	R....20	57.11.3105	1 MOhm	2%	
	R....21	57.11.3105	1 MOhm	2%	
	R....22	57.11.3393	39 kOhm	2%	
	R....23	57.11.5335	3.3 MOhm	5%	
	R....24		not used		
	R....25		not used		
	R....26		not used		
	R....27	57.11.3103	10 kOhm	2%	
	R....28	57.11.3472	4.7 kOhm	1%	
	R....29	57.11.3102	1 kOhm	1%	
	R....30	57.99.0209	5.6 Ohm	PTC Resistor, Philips Nr. 2322 662 91005	
	R....31	57.11.3103	10 kOhm	2%	
	R....32	57.11.3104	100 kOhm	5%	
	R....33	57.11.3104	100 kOhm	2%	
	R....34	57.11.3152	1.5 kOhm	2%	
	R....35	57.11.3103	10 kOhm	2%	
	R....36	57.11.3105	1 MOhm	2%	
	R....37	57.11.3103	10 kOhm	2%	
	R....38	57.11.3472	4.7 kOhm	1%	
	R....39	57.11.3471	470 Ohm	2%	
	R....40	57.11.3152	1.5 kOhm	2%	
	R....41	57.11.3102	1 kOhm	2%	
	R....42	57.11.3104	100 kOhm	2%	
	R....43	57.11.3152	1.5 kOhm	2%	
	R....44	57.11.3683	68 kOhm	2%	
	R....45	57.11.3105	1 MOhm	2%	
	R....46	57.11.3103	10 kOhm	2%	
	R....47	57.11.3103	10 kOhm	2%	
	R....48	57.11.3392	3.9 kOhm	2%	
	R....49	57.11.3102	1 kOhm	2%	
	R....50	57.11.3103	10 kOhm	2%	
	R....51	57.11.3103	10 kOhm	2%	
	R....52	57.11.5106	10 MOhm	5%	
	R....53	57.11.3112	1.1 kOhm	1%	
	R....54	57.11.3392	3.9 kOhm	2%	

IND.	POS.NO.	PART NO.	VALUE	SPECIFICATIONS / EQUIVALENT	MANUF.
	R....55	57.11.3112	1.1 kOhm	1%	
	R....56	57.11.3202	2 kOhm	1%	
	R....57	57.11.3102	1 kOhm	1%	
	R....58	57.11.3152	1.5 kOhm	1%	
	R....59	57.11.3202	2 kOhm	1%	
	R....60	57.11.3104	100 kOhm	2%	
	R....61	57.11.3105	1 MOhm	2%	
	R....62	57.11.3152	1.5 kOhm	1%	
	R....63	57.11.5225	2.2 MOhm	5%	
	R....64	57.11.3102	1 kOhm	2%	
	R....65	57.11.3103	10 kOhm	2%	
	R....66	57.11.3102	1 kOhm	1%	
	R....67	57.11.3102	1 kOhm	1%	
	R....68		not used		
	R....69	57.11.3105	1 MOhm	2%	
	R....70	57.11.3105	1 MOhm	2%	
	R....71	57.11.3102	1 kOhm	2%	
	R....72	57.11.3221	220 Ohm	2%	
	R....73	57.11.3472	4.7 kOhm	5%	
	R....74	57.11.3681	680 Ohm	2%	
	R....75	57.11.3100	10 Ohm	2%	
	R....76	57.11.3105	1 MOhm	2%	
	R....78	57.11.3150	15 Ohm	2%	
	R....80		not used		
	R....81	57.11.3102	1 kOhm	2%	
	R....82	57.11.3151	150 Ohm	2%	
	R....83	57.11.5106	10 MOhm	5%	
	R....84	57.11.3103	10 kOhm	2%	
	R....85	57.11.3101	100 Ohm	2%	
	R....86	57.11.3104	100 kOhm	2%	
	R....87	57.11.3104	100 kOhm	2%	
	R....88	57.11.3101	100 Ohm	2%	
	R....89	57.11.3152	1.5 kOhm	2%	
	R....90	57.11.3103	10 kOhm	2%	
	R....91	57.11.3103	10 kOhm	2%	
	R....92	57.11.3102	1 kOhm	2%	
	R....93	57.11.3681	680 Ohm	2%	

IND.	POS.NO.	PART NO.	VALUE	SPECIFICATIONS / EQUIVALENT	MANUF.
	R....94	57.11.3102	1 kOhm	2%	
	R....95		not used		
	R....98	57.11.3105	1 MOhm	2%	
	R....99	57.11.5106	10 MOhm	5%	
	R....100	57.11.5106	10 MOhm	5%	
	R....101	57.11.5475	4.7 MOhm	5%	
	R....102	57.11.3101	100 Ohm	5%	
	R....103	57.11.5475	4.7 MOhm	5%	
	R....104	57.11.3472	4.7 kOhm	5%	
	R....105	57.11.3272	2.7 kOhm	5%	
	R....106	57.11.3270	27 Ohm	5%	
	R....107	57.11.3201	200 Ohm	2%	
	R....108	57.11.3132	1.3 kOhm	2%	
	T.....1	1.022.218.00		Input Transformer 1:1	St
	T.....2	1.022.215.00		Time Code Output Transformer	St
	T.....3	1.022.221.00		Time Code HF Transformer	St

IND.	POS.NO.	PART NO.	VALUE	SPECIFICATIONS / EQUIVALENT	MANUF.

<01) 08.01.90 Optimised reading at high ambient temperature.

Note 1: Contact pin: Studer Nr. $4.01.0020
Berg Nr. "S 160-102-36
Philips Nr. 2422 025 89303
Bridge: Studer Nr. $4.01.0021
Cannatel Nr. 313.1365.000 408
Philips Nr. 2422 024 88003

Note 2: Potentiometer, linear, Bourns Nr. 3329 H - 1 - 203
VRM Nr. 1"0 - 20k
Lesa Nr. 1"0 - 20k

Note 3: Potentiometer, linear, Bourns Nr. 3329 H - 1 - 502
VRM Nr. 1"0 - 5k
Lesa Nr. 1"0 - 5k

Cer=Ceramic, Sal=Solid Aluminum

MANUFACTURER: Ex=Exar, Fe=Fairchild, Fa=Ferranti,
GI=General Instruments, ITT=Intermetall,
Mot=Motorola, NS=National Semiconductors,
Fh=Philips, Ra=Raytheon, RCA=Radio Corp. of America,
Sem=Semcomm, Sie=Siemens, Sig=Signetics, St=Studer,
Sil=Siliconix, TS=Teledyne Semiconductors,
TE=Telefunken, TI=Texas Instruments

ORIG 89/11/03 (01) 90/01/08

TIME CODE READ/WRITE UNIT PCB 1.810.724–00 GR20 EL6 "ESE"
TIME CODE TRIGGER PCB 1.810.723–00

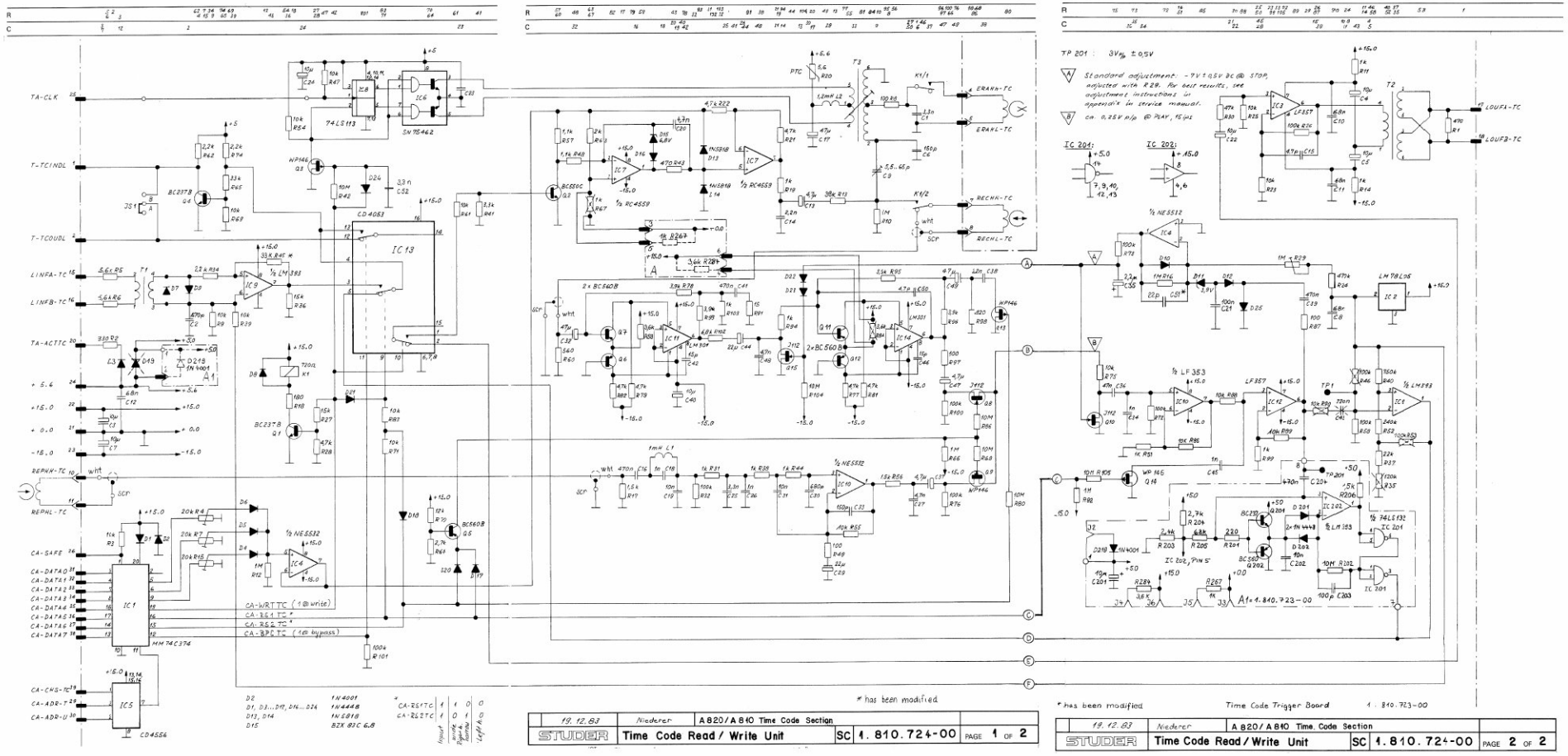

19. 12. 83	Niederer	A 820 / A 810 Time Code Section		
STUDER	Time Code Read / Write Unit	SC 1. 810. 724-00	PAGE 1 OF 2	

19. 12. 83	Niederer	A 820 / A 810 Time Code Section		
STUDER	Time Code Read / Write Unit	SC 1. 810. 724-00	PAGE 2 OF 2	

WORKS ONLY IN CONJUNCTION
WITH COMMAND UNIT 1.810.734–00 (LCD)

TIME CODE READ/WRITE UNIT PCB 1.810.724–00 GR20 EL6 "ESE"

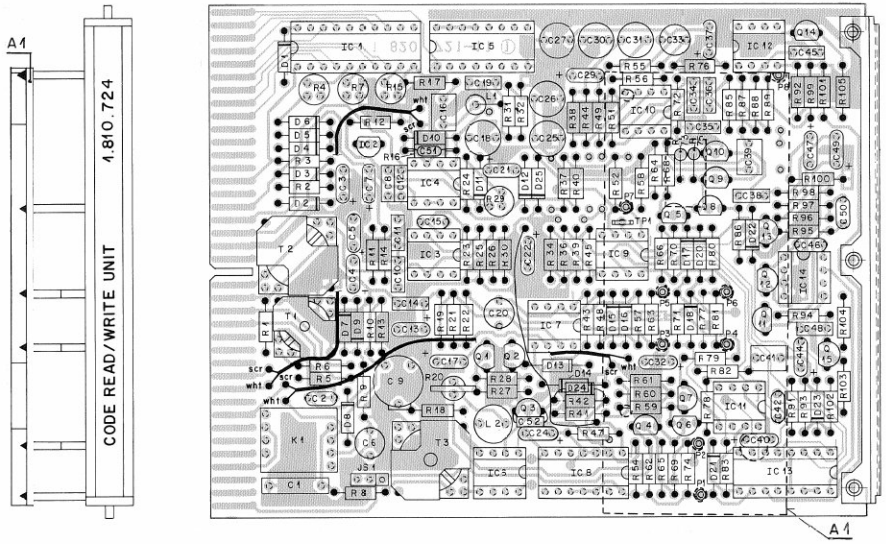

IND.	POS.NO.	PART NO.	VALUE	SPECIFICATIONS / EQUIVALENT	MANUF.
	A.0001	1.810.723.00		Time code trigger board	St
	C.0001	59.11.6332	3.3 nF	5%	
	C.0002	59.34.5671	470 pF	20%, Ce	
	C.0003	59.26.2100	10 uF	-20%, 16V, Sal	Ph
	C.0004	59.26.2100	10 uF	-20%, 16V, Sal	Ph
	C.0005	59.26.2100	10 uF	-20%, 16V, Sal	Ph
	C.0006	59.05.2151	150 pF	2.5%	
	C.0007	59.26.2100	10 uF	-20%, 16V, Sal	Ph
	C.0008	59.99.0205	68 nF	-20%, Ce	
	C.0009	59.16.0102	65 pF	Trimmer capacitor, Philips Nr 2222 808 01001	
	C.0010	59.99.0205	68 nF	-20%, Ce	
	C.0011	59.99.0205	68 nF	-20%, Ce	
	C.0012	59.99.0205	68 nF	-20%, Ce	
	C.0013	59.26.5479	4.7 uF	-20%, 25V, Sal	Ph
	C.0014	59.06.0222	2.2 nF	10%	
	C.0015	59.34.0479	4.7 pF	20%, Ce	
	C.0016	59.06.0474	470 nF	10%	
	C.0017	59.26.0470	47 uF	-20%, 6.3V, Sal	Ph
	C.0018	59.05.1102	1 nF	1%	
	C.0019	59.06.0103	10 nF	10%	
	C.0020	59.05.2472	4.7 nF	2.5%	
	C.0021	59.06.0104	0.1 uF	10%	
	C.0022	59.26.2100	10 uF	-20%, 16V, Sal	Ph
	C.0023	not used			
	C.0024	59.26.2100	10 uF	-20%, 16V, Sal	Ph
	C.0025	59.05.1332	3.3 nF	1%	
	C.0026	59.05.1102	1 nF	1%	
	C.0027	59.05.1472	4.7 nF	1%	
	C.0028	not used			
	C.0029	59.26.1220	22 uF	-20%, 10V, Sal	Ph
	C.0030	59.05.1681	680 pF	1%	
	C.0031	59.05.1103	10 nF	1%	
	C.0032	59.26.0470	47 uF	-20%, 6.3V, Sal	Ph
	C.0033	59.05.2151	150 pF	2.5%	
	C.0034	59.06.0102	1 nF	10%	
	C.0035	59.26.5229	2.2 uF	-20%, 25V, Sal	Ph

IND.	POS.NO.	PART NO.	VALUE	SPECIFICATIONS / EQUIVALENT	MANUF.
	C.0036	59.06.0473	47 nF	10%	
	C.0037	59.26.5479	4.7 uF	-20%, 25V, Sal	Ph
	C.0038	59.06.0223	22 nF	10%	
	C.0039	59.06.0474	470 nF	10%	
	C.0040	59.26.2100	10 uF	-20%, 16V, Sal	Ph
	C.0041	59.06.0474	470 nF	10%	
	C.0042	59.34.1150	15 pF	20%, Ce	
	C.0043	not used			
	C.0044	59.26.1220	22 uF	-20%, 10V, Sal	Ph
	C.0045	not used			
	C.0046	59.34.1150	15 pF	20%, Ce	
	C.0047	59.26.5479	4.7 uF	-20%, 25V, Sal	Ph
	C.0048	59.06.0472	4.7 nF	10%	
	C.0049	59.26.0470	47 uF	-20%, 6.3V, Sal	Ph
	C.0050	59.34.0479	4.7 pF	20%, Ce	
	C.0051	59.99.0609	22 pF	10%, Ce	
	C.0052	59.06.0332	3.3 nF	10%	
	D.0001	50.04.0125	1N4448		ITT,Ph,Ses,TI
	D.0002	50.04.0122	1N4001	1N4002, 1N4003, 1N4004	Fc,Gi,Mot
	D.0003	50.04.0125	1N4448		ITT,Ph,Ses,TI
	D.0004	50.04.0125	1N4448		ITT,Ph,Ses,TI
	D.0005	50.04.0125	1N4448		ITT,Ph,Ses,TI
	D.0006	50.04.0125	1N4448		ITT,Ph,Ses,TI
	D.0007	50.04.0125	1N4448		ITT,Ph,Ses,TI
	D.0008	50.04.0125	1N4448		ITT,Ph,Ses,TI
	D.0009	50.04.0125	1N4448		ITT,Ph,Ses,TI
	D.0010	50.04.0125	1N4448		ITT,Ph,Ses,TI
	D.0011	50.04.1101	3.9 V Z	BZX83C 3V9, BZX55C 3V9, ZPD 3.9	ITT,Ses
	D.0012	50.04.0125	1N4448		ITT,Ph,Ses,TI
	D.0013	50.04.0512	1N5818	1N5819	Mot
	D.0014	50.04.0512	1N5818	1N5819	Mot
	D.0015	50.04.1102	6.8 V Z	BZX83C 6V8, BZX55C 6V8, ZPD 6.8	ITT,Ses
	D.0016	50.04.0125	1N4448		ITT,Ph,Ses,TI
	D.0017	50.04.0125	1N4448		ITT,Ph,Ses,TI
	D.0018	50.04.0125	1N4448		ITT,Ph,Ses,TI
	D.0019	not used			

IND.	POS.NO.	PART NO.	VALUE	SPECIFICATIONS / EQUIVALENT	MANUF.
	D.0020	50.04.0125	1N4448		ITT,Ph,Ses,TI
	D.0021	50.04.0125	1N4448		ITT,Ph,Ses,TI
	D.0022	50.04.0125	1N4448		ITT,Ph,Ses,TI
	D.0023	50.04.0125	1N4448		ITT,Ph,Ses,TI
	D.0024	50.04.0125	1N4448		ITT,Ph,Ses,TI
	D.0025	50.04.0125	1N4448		ITT,Ph,Ses,TI
	IC.0001	50.07.0003	MM74C374N		NS
	IC.0002	50.10.0107	LM78L05ACS	uA78L05AWC	Fc,NS
	IC.0003	50.09.0102	LF357P		NS
	IC.0004	50.09.0106	NE5532AN	XR5532AN, 5532ANB	Ex,Ra,Sig
	IC.0005	50.07.0004	MC14556BCP	CD4556BE	Fc,Mot,RCA
	IC.0006	50.05.0227	SN75462P	SN75472P	TI
	IC.0007	50.04.0107	RC4559NB		Ra
	IC.0008	50.06.0113	SN74LS113N	N74LS113N, DM74LS113N	NS,Sig,TI
	IC.0009	50.05.0203	LM393N	LM393P	NS,TI
	IC.0010	50.09.0101	LF353N	TL072CP	NS,TI
	IC.0011	50.05.0144	LM301AN		NS
	IC.0012	50.09.0102	LF357P		NS
	IC.0013	50.07.0015	MC14053B	CD4053BCN	Mot,NS
	IC.0014	50.05.0144	LM301AN		NS
	JS.0001			See Note 1	
	P.0001	1.010.019.54		Contact pin 13.590.5	St
	P.0002	1.010.018.54		Contact pin 8.590.4	St
	P.0003	1.010.018.54		Contact pin 8.590.4	St
	P.0004	1.010.018.54		Contact pin 8.590.4	St
	P.0005	1.010.018.54		Contact pin 8.590.4	St
	P.0006	1.010.018.54		Contact pin 8.590.4	St
	P.0007	1.010.019.54		Contact pin 13.590.5	St
	P.0008	1.010.019.54		Contact pin 13.590.5	St
	R.0001	56.04.0171	SM 01012		ITT
	L.0001	62.01.0128	1 mH	Gowanda Nr. 17-104, Delevan Nr. 1641-105	
	L.0002	62.02.2122	1.2 mH	TDK Nr. CSL 0812-122 J	

IND.	POS.NO.	PART NO.	VALUE	SPECIFICATIONS / EQUIVALENT	MANUF.
	Q.0001	50.03.0436	BC237B	BC547B, BC550B	ITT,Mot,Ph,Sie,TI
	Q.0002	50.03.0497	BC550		Sie
	Q.0003	50.03.0329	P122SE	WP 146	TS,Sx
	Q.0004	50.03.0436	BC237B	BC547B, BC550B	ITT,Mot,Ph,Sie,TI
	Q.0005	50.03.0496	BC560B		Mot,Ph,Sie,TI
	Q.0006	50.03.0496	BC560B		Mot,Ph,Sie,TI
	Q.0007	50.03.0496	BC560B		Mot,Ph,Sie,TI
	Q.0008	50.03.0350	J112F-18	J112A, TM00062	NS,Mot
	Q.0009	50.03.0329	P122SE	WP 146	TS,Sx
	Q.0010	50.03.0350	J112F-18	J112A, TM00062	NS,Mot
	Q.0011	50.03.0496	BC560B		Mot,Ph,Sie,TI
	Q.0012	50.03.0496	BC560B		Mot,Ph,Sie,TI
	Q.0013	50.03.0329	P122SE	WP 146	TS,Sx
	Q.0014	50.03.0329	P122SE	WP 146	TS,Sx
	Q.0015	50.03.0350	J112F-18	J112A, TM00062	NS,Mot
	R.0001	57.11.4471	470 Ohm	2%	
	R.0002	57.11.4331	330 Ohm	2%	
	R.0003	57.11.4103	10 kOhm	2%	
	R.0004	58.11.6203	20 kOhm	See note 2	
	R.0005	57.11.4562	5.6 kOhm	2%	
	R.0006	57.11.4562	5.6 kOhm	2%	
	R.0007	58.11.6203	20 kOhm	See note 2	
	R.0008	57.11.4101	100 Ohm	2%	
	R.0009	57.11.4103	10 kOhm	2%	
	R.0010	57.11.4105	1 MOhm	2%	
	R.0011	57.11.4102	1 kOhm	2%	
	R.0012	57.11.4105	1 MOhm	2%	
	R.0013	57.11.4393	39 kOhm	2%	
	R.0014	57.11.4102	1 kOhm	2%	
	R.0015	58.11.6203	20 kOhm	See note 2	
	R.0016	57.11.4105	1 MOhm	2%	
	R.0017	57.11.4152	1.5 kOhm	2%	
	R.0018	57.11.4181	180 Ohm	2%	
	R.0019	57.11.4102	1 kOhm	2%	
	R.0020	57.99.0209	5.6 Ohm	PTC Resistor, Philips Nr. 2322 662 91005	
	R.0021	57.11.3472	4.7 kOhm	1%	

IND.	POS.NO.	PART NO.	VALUE	SPECIFICATIONS / EQUIVALENT	MANUF.
	R.0022	57.11.3472	4.7 kOhm	1%	
	R.0023	57.11.4103	10 kOhm	2%	
	R.0024	57.11.4474	470 kOhm	2%	
	R.0025	57.11.4103	10 kOhm	2%	
	R.0026	57.11.4104	100 kOhm	2%	
	R.0027	57.11.4153	15 kOhm	2%	
	R.0028	57.11.4472	4.7 kOhm	2%	
	R.0029	58.11.4105	1 MOhm	See note 3	
	R.0030	57.11.4473	47 kOhm	2%	
	R.0031	57.11.3102	1 kOhm	1%	
	R.0032	57.11.4104	100 kOhm	2%	
	R.0033	not used		substituted by D 25	
	R.0034	57.11.4222	2.2 kOhm	2%	
	R.0035	not used			
	R.0036	57.11.4153	15 kOhm	2%	
	R.0037	57.11.4223	22 kOhm	2%	
	R.0038	57.11.3102	1 kOhm	1%	
	R.0039	57.11.4103	10 kOhm	2%	
	R.0040	57.11.3754	750 kOhm	1%	
	R.0041	57.11.4332	3.3 kOhm	2%	
	R.0042	57.11.4106	10 MOhm	1%	
	R.0043	57.11.4471	470 Ohm	2%	
	R.0044	57.11.3102	1 kOhm	1%	
	R.0045	57.11.4333	33 kOhm	2%	
	R.0046	not used			
	R.0047	57.11.4103	10 kOhm	2%	
	R.0048	57.11.3112	1.1 kOhm	1%	
	R.0049	57.11.4101	100 Ohm	2%	
	R.0050	not used			
	R.0051	57.11.4102	1 kOhm	2%	
	R.0052	57.11.3244	240 kOhm	1%	
	R.0053	not used			
	R.0054	57.11.4103	10 kOhm	2%	
	R.0055	57.11.4103	10 kOhm	2%	
	R.0056	57.11.4152	1.5 kOhm	2%	
	R.0057	57.11.3112	1.1 kOhm	1%	
	R.0058	57.11.3104	100 kOhm	1%	

IND.	POS.NO.	PART NO.	VALUE	SPECIFICATIONS / EQUIVALENT	MANUF.
	R.0059	57.11.3362	3.6 kOhm	1%	
	R.0060	57.11.4561	560 Ohm	2%	
	R.0061	57.11.4103	10 kOhm	2%	
	R.0062	57.11.4222	2.2 kOhm	2%	
	R.0063	57.11.3202	2 kOhm	1%	
	R.0064	57.11.4272	2.7 kOhm	2%	
	R.0065	57.11.4333	33 kOhm	2%	
	R.0066	57.11.4105	1 MOhm	2%	
	R.0067	not used			
	R.0068	57.11.6106	10 kOhm	10%	
	R.0069	57.11.4103	10 kOhm	2%	
	R.0070	57.11.4123	12 kOhm	2%	
	R.0071	57.11.4103	10 kOhm	2%	
	R.0072	57.11.4104	100 kOhm	2%	
	R.0073	57.11.4104	100 kOhm	2%	
	R.0074	57.11.4222	2.2 kOhm	2%	
	R.0075	57.11.4103	10 kOhm	2%	
	R.0076	57.11.4104	100 kOhm	2%	
	R.0077	57.11.4472	4.7 kOhm	2%	
	R.0078	57.11.4392	3.9 kOhm	2%	
	R.0079	57.11.4472	4.7 kOhm	2%	
	R.0080	57.11.6106	10 kOhm	10%	
	R.0081	57.11.4472	4.7 kOhm	2%	
	R.0082	57.11.4472	4.7 kOhm	2%	
	R.0083	57.11.4103	10 kOhm	2%	
	R.0084	not used			
	R.0085	57.11.4103	10 kOhm	2%	
	R.0086	57.11.6106	10 kOhm	10%	
	R.0087	57.11.4101	100 Ohm	2%	
	R.0088	57.11.4103	10 kOhm	2%	
	R.0089	57.11.4103	10 kOhm	2%	
	R.0090	not used			
	R.0091	57.11.4150	15 Ohm	2%	
	R.0092	57.11.4105	1 MOhm	2%	
	R.0093	57.11.4392	3.9 kOhm	2%	
	R.0094	57.11.4102	1 kOhm	2%	
	R.0095	57.11.4392	3.9 kOhm	2%	

IND.	POS.NO.	PART NO.	VALUE	SPECIFICATIONS / EQUIVALENT	MANUF.
	R.0096	57.11.4392	3.9 kOhm	2%	
	R.0097	57.11.4101	100 Ohm	2%	
	R.0098	57.11.3821	820 Ohm	1%	
	R.0099	57.11.4102	1 kOhm	2%	
	R.0100	57.11.4104	100 kOhm	2%	
	R.0101	57.11.4104	100 kOhm	2%	
	R.0102	57.11.4682	6.8 kOhm	2%	
	R.0103	57.11.4102	1 kOhm	2%	
	R.0104	57.11.6106	10 MOhm	10%	
	R.0105	57.11.6106	10 MOhm	10%	
	T.0001	1.022.218.00		Input transformer- 1 : 1	St
	T.0002	1.022.215.00		Time code output transformer	St
	T.0003	1.022.221.00		Time code HF transformer	St

IND.	POS.NO.	PART NO.	VALUE	SPECIFICATIONS / EQUIVALENT	MANUF.
	Note 1: Contact pin:	Studer Nr.		54.01.0020	
		Berg Nr.		79 160-102-36	
		Philips Nr.		2422 025 89303	
	Bridge:	Studer Nr.		54.01.0021	
		Berg Nr.		65 474-001	
		AMP Nr.		141 767-1	
		Philips Nr.		2422 024 88003	
	Note 2: Potentiometer, linear,	Bourns Nr. 3329 H - 1 - 203			
		VEN Nr.		170 - 204	
	Note 3: Potentiometer, linear,	Bourns Nr. 3329 H - 1 - 105			
		VEN Nr.		170 - 14	
	Ce=Ceramic, Sal=Solid Aluminium				
	MANUFACTURER:	Ex=Exar, Fc=Fairchild, Gi=General Instruments, ITT=Intermetall, Mot=Motorola, NS=National Semicond., Ph=Philips, Ra=Raytheon, RCA=Radio Corp. of America, Ses=Sescosem, Sie=Siemens, Sig=Signetics, St=Studer, Sx=Siliconix, TS=Teledyne Semiconductor, Tf=Telefunken, TI=Texas Instruments			
	ORIG 83/12/19				

TIME CODE TRIGGER PCB 1.810.723–00

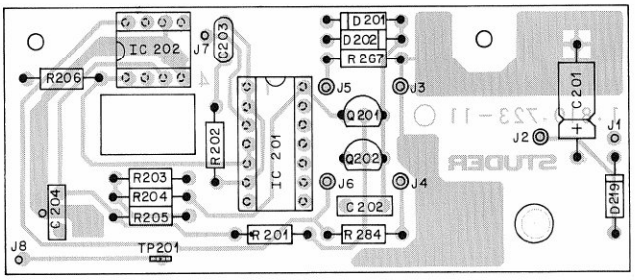

IND.	POS.NO.	PART NO.	VALUE	SPECIFICATIONS / EQUIVALENT	MANUF.
	C...201	59.25.4100	10 uF	20%, 6.3V, El	
	C...202	59.06.0103	10 nF	10%	
	C...203	59.34.4101	100 pF	5%, Ce	
	C...204	59.06.0474	0.47 uF	10%	
	D...201	50.04.0125	1N4448		Fc,ITT,Ph,Ses
	D...202	50.04.0125	1N4448		Fc,ITT,Ph,Ses
	D...219	50.04.0122	1N4001	1N4002,1N4003,1N4004	Mot,GI,Sol
	IC..201	50.06.0132	SN74LS132N	N74LS132N	TI,Sig
	IC..202	50.05.0283	LM393N	LM393P	NS,TI
	J...002	1.010.008.54		Contact jack	St
	J...003	1.010.008.54		Contact jack	St
	J...004	1.010.008.54		Contact jack	St
	J...005	1.010.008.54		Contact jack	St
	J...006	1.010.008.54		Contact jack	St
	Q...201	50.03.0436	BC237B	BC547B, BC550B	ITT,Mot,Ph,Sie
	Q...202	50.03.0496	BC560		Sie
	R...201	57.11.4221	220 Ohm	5%	
	R...202	57.11.5106	10 MOhm	5%	
	R...203	57.11.3242	2.4 kOhm	2%	
	R...204	57.11.4272	2.7 kOhm	2%	
	R...205	57.11.4683	68 kOhm	2%	
	R...206	57.11.4152	1.5 kOhm	5%	
	R...207	57.11.4102	1 kOhm	2%	
	R...284	57.11.3362	3.6 kOHM	2%	

IND.	POS.NO.	PART NO.	VALUE	SPECIFICATIONS / EQUIVALENT	MANUF.

Ce=Ceramic, El=Electrolytic

MANUFACTURER: Fc=Fairchild, GI=General Instruments, ITT=Intermetall, Mot=Motorola, NS=National Semiconductors, Ph=Philips, Ses=Sescosem, Sie=Siemens, Sig=Signetics, Sol=Solitron, St=Studer, TI=Texas Instruments

ORIG 83/12/20

TIME CODE DELAY UNIT PCB 1.820.722–00/–81 GR20 EL7 "ESE"

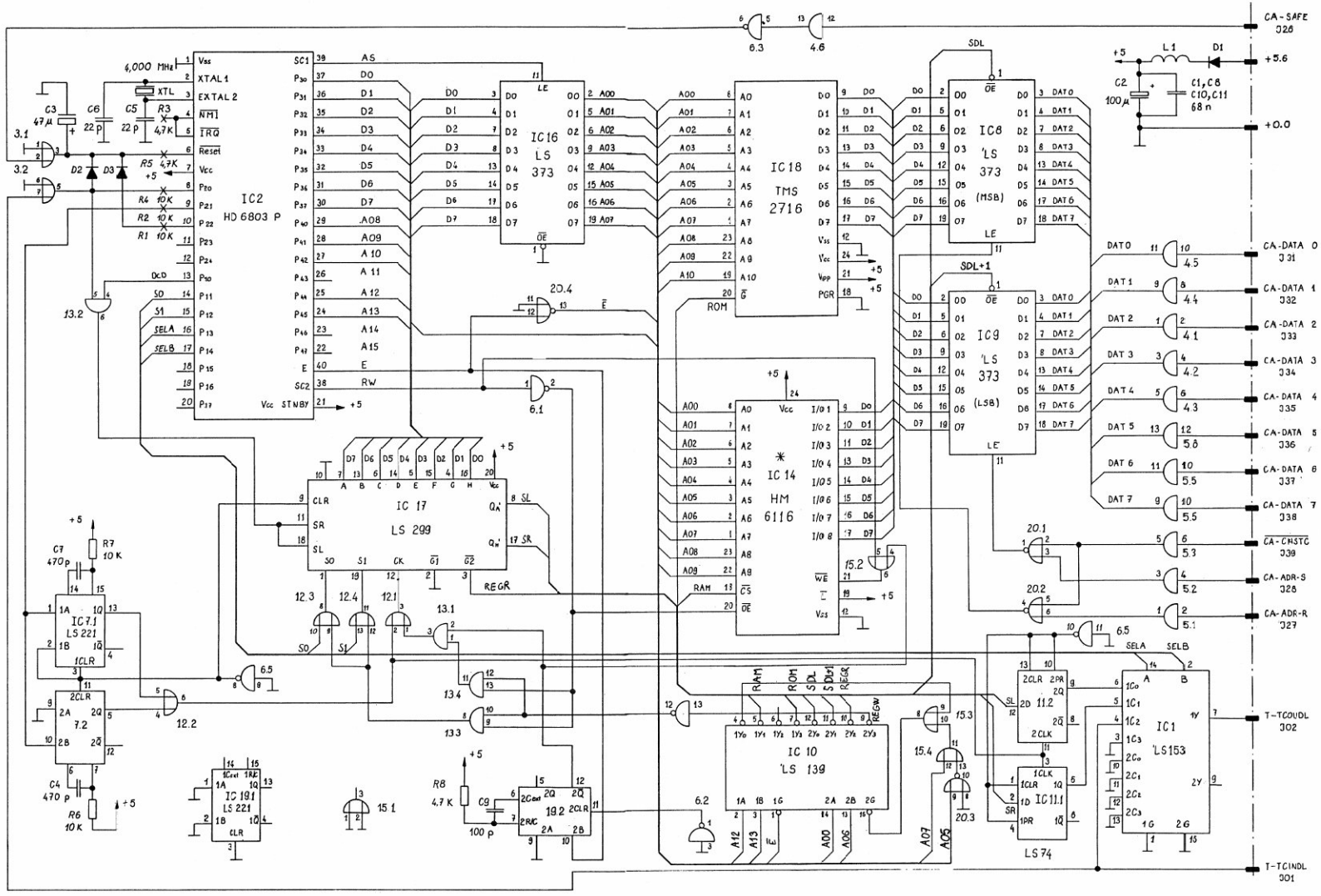

✱ HAS BEEN MODIFIED

TIME CODE DELAY UNIT PCB 1.820.722–00/–81 GR20 EL7 "ESE"

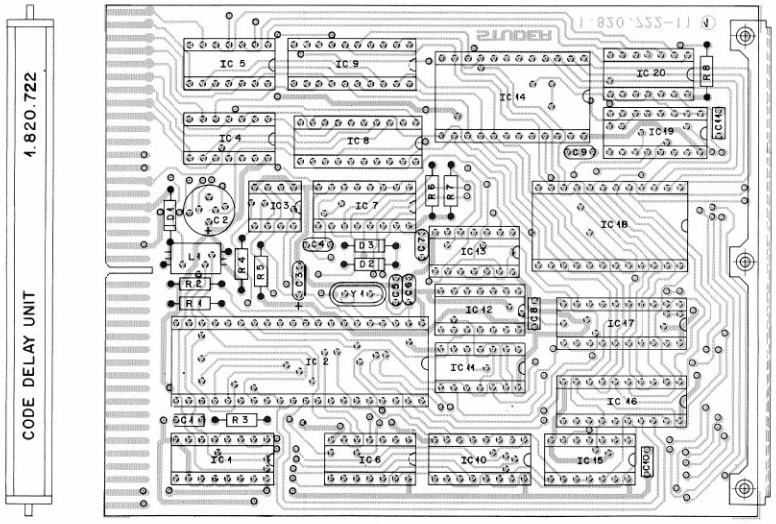

IND.	POS.NO.	PART NO.	VALUE	SPECIFICATIONS / EQUIVALENT	MANUF.
	C....01	59.99.8205	68 nF	Ce	
	C....02	59.22.5101	100 uF	20%, 6V, El	
	C....03	59.26.8470	47 uF	20%, 6V, El	
	C....04	59.34.5471	470 pF	Ce	
	C....05	59.34.2220	22 pF	Ce	
	C....06	59.34.2220	22 pF	Ce	
	C....07	59.34.5471	470 pF	Ce	
	C....08	59.99.8205	68 nF	Ce	
	C....09	59.34.1101	100 pF	Ce	
	C....10	59.99.8205	68 nF	Ce	
	C....11	59.99.8205	68 nF	Ce	
	D....01	50.04.8512	1N 5818		Mot
	D....02	50.04.8122	1N 4001	1N 4002, 1N 4003, 1N 4004	
	D....03	50.04.8122	1N 4001	1N 4002, 1N 4003, 1N 4004	
	IC...01	50.06.8153		SN 74 LS 153 N TTL	Sie,TI
	IC...02	50.16.8105	MC 6803	HD 6803 PC, see note 1	Mot,Hi
	IC...03	50.05.8203	SN 75463P	DS 3613 N ORIV	TI,NS
	IC...04	50.07.8902		MMF4 C 902, A	NS
	IC...05	50.07.8902		MMF4 C 902, A	NS
	IC...06	50.06.8004		SN 74 LS 04 N TTL	Sie,TI
	IC...07	50.06.8221		SN 74 LS 221 N TTL	TI
	IC...08	50.06.8373		SN 74 LS 373 N	Sie,TI,Mot
	IC...09	50.06.8373		SN 74 LS 373 N	Sie,TI,Mot
	IC...10	50.06.8139		SN 74 LS 139 N TTL	AMI,TI
	IC...11	50.06.8074		SN 74 LS 74 N TTL	Sie,TI
	IC...12	50.06.8032		SN 74 LS 32 N TTL	Sie,TI
	IC...13	50.06.8008		SN 74 LS 08 N TTL	Sie,TI
(00)	IC...14	50.14.8105		MK 4118P-4, -2, -3, N-4, A	Mos
(01)	IC...14	50.14.8107		HM 6116 LP-3 , MSM 5128-15, A	Hi,Ok
	IC...15	50.06.8032		SN 74 LS 32 N TTL	Sie,TI
	IC...16	50.06.8373		SN 74 LS 373 N	Sie,TI,Mot
	IC...17	50.06.8299		SN 74 LS 299 N TTL	AMI,TI
	IC...18	1.025.025.70		Software Delay time code R 257	
	IC...19	50.06.8221		SN 74 LS 221 N TTL	TI
	IC...20	50.06.8002		SN 74 LS 02 N TTL	TI,Sie

S T U D E R 82/12/07 BUS CODE DELAY UNIT "ESE" 1.820.722.00 PAGE 1

IND.	POS.NO.	PART NO.	VALUE	SPECIFICATIONS / EQUIVALENT	MANUF.
	L....01	62.01.0115		Interference coil, Philips Nr 4312 020 36700	
	R....01	57.11.4103	10 kOhm	5%	
	R....02	57.11.4103	10 kOhm	5%	
	R....03	57.11.4472	4.7 kOhm	5%	
	R....04	57.11.4103	10 kOhm	5%	
	R....05	57.11.4472	4.7 kOhm	5%	
	R....06	57.11.4103	10 kOhm	5%	
	R....07	57.11.4103	10 kOhm	5%	
	R....08	57.11.4472	4.7 kOhm	5%	
	Y....01	89.01.0550		Quartz 4.000 MHz, HC 18 U	

(01) 82/12/07 IC 14, MK4118, no more manufactured; substituted by HM6116 LP-3

Note 1: For spare use MC 6803-1, Motorola, Studer Nr. 50.16.0107

El=Electrolytic
Ce=Ceramic

MANUFACTURER: Mot=Motorola; Ph=Philips; Hi=Hitachi; It=Intel;
TI=Texas Instruments; Sie=Siemens; Mos=Mostek;
NS=National Semiconductors; AMI=American Microsystem Inc.
Ok=Oki

ORIG 82/03/26 (01) 82/12/07

S T U D E R 82/12/07 BUS CODE DELAY UNIT "ESE" 1.820.722.00 PAGE 2

IND.	POS.NO.	PART NO.	VALUE	SPECIFICATIONS / EQUIVALENT	MANUF.
	C....01	59.99.C205	68 nF	Ce	
	C....02	59.22.5101	100 uF	20%, 6V, El	
	C....03	59.26.C470	47 uF	20%, 6V, Sol	Ph
	C....04	59.34.5471	470 pF	Ce	
	C....05	59.34.2220	22 pF	Ce	
	C....06	59.34.2220	22 pF	Ce	
	C....07	59.34.5471	470 pF	Ce	
	C....08	59.99.C205	68 nF	Ce	
	C....09	59.34.1101	100 pF	Ce	
	C....10	59.99.C205	68 nF	Ce	
	C....11	59.99.C205	68 nF	Ce	
	D....01	50.04.C512	1N5818	1N5819	Mot
	D....02	50.04.C122	1N4001	1N4002, 1N4003, 1N4004	Fc,GI,Mot,Sol
	D....03	50.04.C122	1N4001	1N4002, 1N4003, 1N4004	Fc,GI,Mot,Sol
	IC...01	50.06.C153	SN74LS153N	N74LS153N	Sig,TI
	IC...02	50.16.C107	MC6803G-1	HD6103P-1	Hi,Mot
	IC...03	50.05.C203	SN75463P	SN75463JG, SN55463JG, DS3613N	NS,TI
	IC...04	50.07.C902	MMT4C902		NS
	IC...05	50.07.C902	MMT4C902		NS
	IC...06	50.06.C004	SN74LS 04N	N74LS 04N	Sig,TI
	IC...07	50.06.C221	SN74LS221N		TI
	IC...08	50.06.C373	SN74LS373N	N74LS373N	Mot,Sig,TI
	IC...09	50.06.C373	SN74LS373N	N74LS373N	Mot,Sig,TI
	IC...10	50.06.C139	SN74LS139N	SN74LS139N	AMI,TI
	IC...11	50.06.C074	SN74LS 74N	N74LS 74AN	Sig,TI
	IC...12	50.06.C032	SN74LS 32N	N74LS 32N	Sig,TI
	IC...13	50.06.C008	SN74LS 08N	N74LS 08N	Sig,TI
(00)	IC...14	50.14.C105	MK4118J-2	-3, -4, MK4118N-2, -3, -4	Mos
(01)	IC...14	50.14.C107	HM6116 LP	-3, MSM5128-15, A	Hi,Ok
	IC...15	50.06.C032	SN74LS 32N	N74LS 32N	Sig,TI
	IC...16	50.06.C373	SN74LS373N	N74LS373N	Mot,Sig,TI
	IC...17	50.06.C299	SN74LS299N	AMI74LS299PC	AMI,TI
	IC...18	1.025.025.70		Software Delay time code R 257	St
	IC...19	50.06.C221	SN74LS221N		TI
	IC...20	50.06.C002	SN74LS 02N	N74LS 02N	Sig,TI

S T U D E R 82/12/07 BUS CODE DELAY UNIT "ESE" 1.820.722.01 PAGE 1

IND.	POS.NO.	PART NO.	VALUE	SPECIFICATIONS / EQUIVALENT	MANUF.
	L....01	62.01.0115		Interference coil, Philips Nr 4312 020 36700	
	R....01	57.11.4103	10 kOhm	5%	
	R....02	57.11.4103	10 kOhm	5%	
	R....03	57.11.4472	4.7 kOhm	5%	
	R....04	57.11.4103	10 kOhm	5%	
	R....05	57.11.4472	4.7 kOhm	5%	
	R....06	57.11.4103	10 kOhm	5%	
	R....07	57.11.4103	10 kOhm	5%	
	R....08	57.11.4472	4.7 kOhm	5%	
	Y....01	89.01.0553		Quartz 4.915 MHz, +-100 ppm	

(01) 82/12/07 IC 14, MK4118, no more manufactured; substituted by HM6118 LP-3

Ce=Ceramic, El=Electrolytic, Sol=Solid aluminium

MANUFACTURER: AMI=American Microsystem Inc., Fc=Fairchild,
GI=General Instruments, Hi=Hitachi, Mos=Mostek,
Mot=Motorola, NS=National Semiconductors, Ph=Philips,
Sig=Signetics, Sol=Solitron, St=Studer,
TI=Texas Instruments, Ok=Oki

ORIG 82/06/21 (01) 82/12/07

S T U D E R 82/12/07 BUS CODE DELAY UNIT "ESE" 1.820.722.01 PAGE 2

SECTION 8 ERSATZTEILE/SPARE PARTS

8.1	VERKLEIDUNGEN UND ZUBEHOER COVERING AND ACCESSORIES	8/3
8.2	Konsole Console	8/5
8.3	KOPFTRAEGER HEAD BLOCK ASSEMBLY	8/9
8.4	BANDZUGWAAGE RECHTS TAPE TENSION SENSOR RIGHT	8/13
8.5	BANDZUGWAAGE LINKS TAPE TENSION SENSOR LEFT	8/15
8.6	ANDRUCKAGGREGAT PRESSURE ROLLER ASSEMBLY	8/17
8.7	BANDABHEBUNG TAPE LIFT ASSEMBLY	8/19
8.8	BANDBREMSEN TAPE BRAKES	8/21
8.9	WICKELMOTOR SPOOLING MOTOR	8/23
8.10	TONMOTOR CAPSTAN MOTOR	8/25
8.11	NETZTEIL POWER SUPPLY	8/27
8.12	ANSCHLUESSE CONNECTOR PANELS	8/29
8.13	PANEL INTERN/EXTERN PANEL INTERNAL/EXTERNAL	8/31
8.14	SCHILDER DESIGNATION PLATES	8/36
8.15	KABELBUENDE WIRE HARNESSES	8/38

WARNUNG

Netzteil und Teile des Laufwerkes fuehren gefaehrliche Spannungen. Trotz des vorhandenen Beruehrungsschutzes innerhalb des Geraetes wird nach Entfernen der Geraeteverschalungen vorsichtiges Hantieren empfohlen. Vor dem Ausbau von Baugruppen ist der Netzstecker zu ziehen.

Um eine unzulaessige Magnetisierung der Tonkoepfe zu vermeiden, muss das Geraet vor dem Entfernen des Kopftraegers ausgeschaltet werden!

Das Geraet muss mindestens 5 Sekunden ausgeschaltet sein, bevor Printplatten ausgezogen oder eingesteckt werden!

Hinweis

Die Ausbauanleitungen beziehen sich auf das **stehende** Geraet.

CAUTION

Power supply and parts of the tape transport carry dangerous voltages. In spite of protections against contact inside the tape recorder, careful handling is recommended after having removed the covers. Before removing any subassembly, disconnect the mains plug.

To avoid inadmissible magnetisation of the sound heads, switch the recorder off before removing the head block.

The recorder has to be switched off for at least 5 seconds before any printed circuit boards are removed or inserted!

Note

The disassembly instructions are referred to with the recorder in **upright** position.

8.1
VERKLEIDUNGEN UND ZUBEHOER
COVERING AND ACCESSORIES

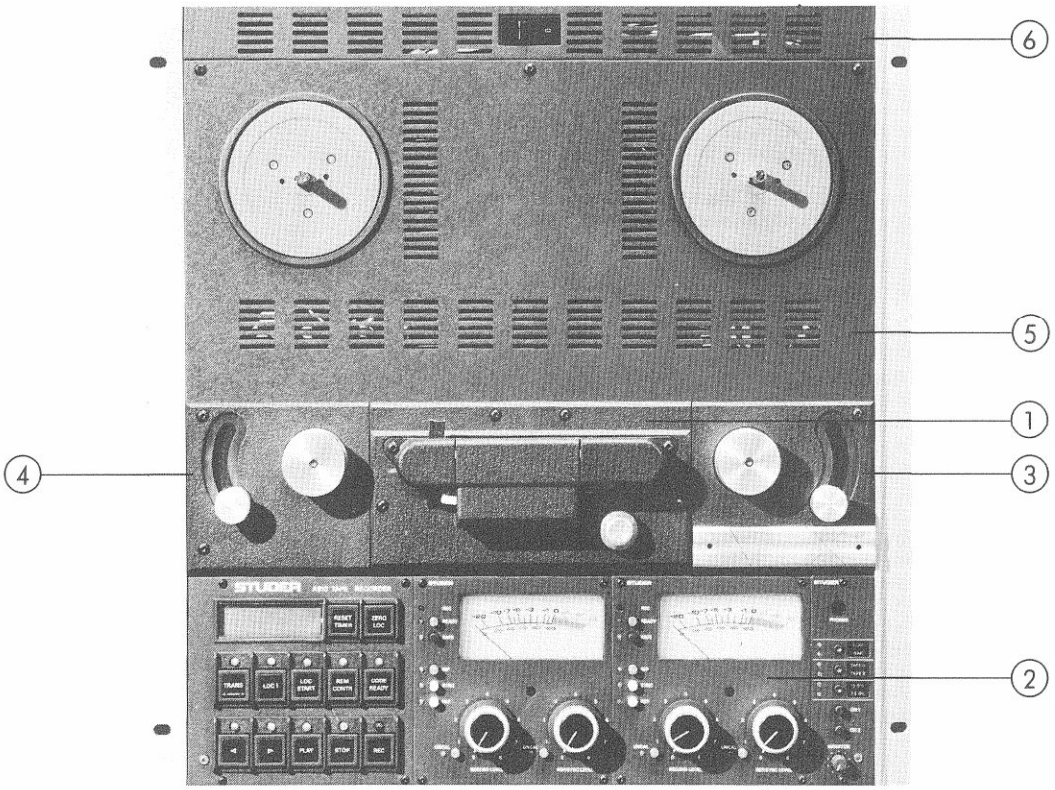

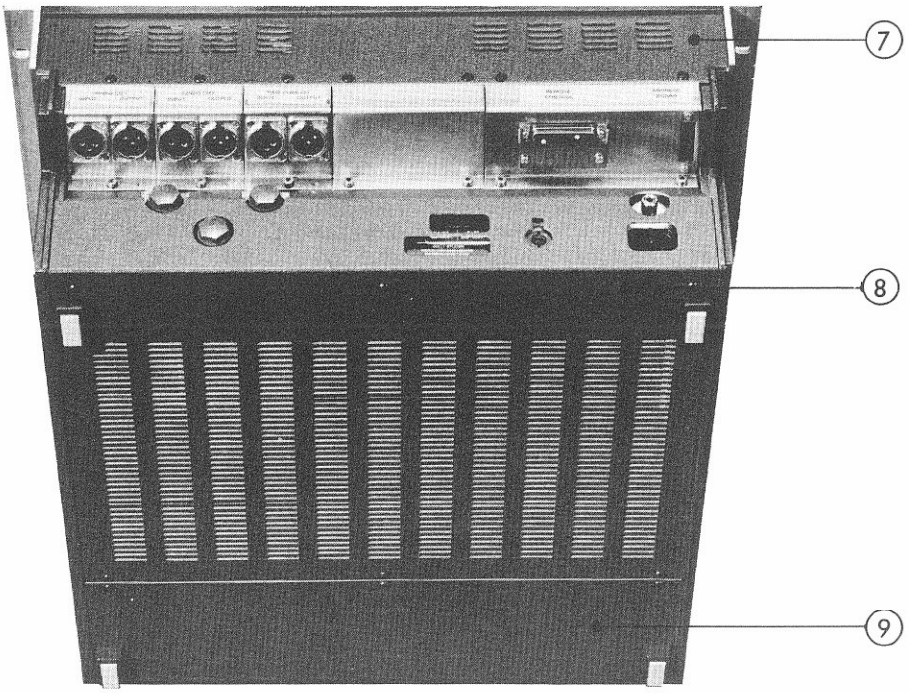

8.1
VERKLEIDUNGEN UND ZUBEHOER
COVERING AND ACCESSORIES

POS	QTY	ORDER NUMBER	BEZEICHNUNG / PART NAME
01	**1**	**1.810.186.00**	**Kopftraegerabdeckung kompl.** **Headblock cover compl.**
			Screw S IS M3x5
02			Panels, siehe 8.12 Panels, see 8.12
03	**1**	**1.810.090.32**	**Abdeckung fuer Bandzugwaage rechts** **Cover to right-hand tape tension sensor**
04	**1**	**1.810.090.33**	**Abdeckung fuer Bandzugwaage links** **Cover to left-hand tape tension sensor** **zu 03, 04:** **to 03, 04:**
	4	1.010.007.21	Schraube LIN IS M4x8 Screw LIN IS M4x8
			zu 03: to 03:
	1	**1.810.090.51**	**Klebeschiene** **Splicing block**
	2	22.01.8030	Sechskantmutter M3 Hex. nut M3
	2	23.01.2032	Unterlagscheibe D 3,2/7 Washer D 3.2/7
	2	24.16.1030	Sicherungsscheibe D 3,2/5,5 Lock Washer D 3.2/5.5
05	**1**	**1.810.090.30**	**Laufwerkabdeckung kompl.** **Tape transport cover compl.**
	2	1.810.090.29	Schutzring Protection ring
	3	1.010.007.21	Schraube LIN IS M4x8 Screw LIN IS M4x8
06	**1**	**1.810.090.08**	**Abdeckleiste** **Cover bracket**
	4	21.53.0455	Schraube Z IS M4x8 Screw Z IS M4x8
	4	23.01.1043	Unterlagscheibe D 4,3/8 Washer D 4.3/8
07	**1**	**1.810.090.31**	**Abdeckung oben** **Top cover**
	7	1.010.007.21	Schraube LIN IS M4x8 Screw LIN IS M4x8
08	**1**	**1.810.251.00**	**Rueckwand, oben; kompl. mit Fuessen** **Rear cover, upper; compl. with feet**
	6	1.010.007.21	Schraube LIN IS M4x8 Screw LIN IS M4x8
	2	1.177.930.08	Fuss Foot
	2	1.067.010.08	Fusseinlage Foot insertion
09	**1**	**1.810.250.00**	**Rueckwand, unten; kompl. m. Isolation, mit Fuessen** **Rear cover, lower; compl. w. insulation, w. feet**
	5	1.010.007.21	Schraube LIN IS M4x8 Screw LIN IS M4x8
	6	1.177.930.08	Fuss Foot
	6	1.067.010.08	Fusseinlage Foot insertion
	2	1.810.075.00	Griffset kompl. (fuer Konsolenversion) Set of handles (console version)
	2	21.53.2507	Schraube S IS M5x12 Screw S IS M5x12
	2	21.53.2512	Schraube S IS M5x25 Screw S IS M5x25
	2	1.810.075.01	Griffunterlage Handle support
	1	**1.810.077.00**	**Seitenabdeckung, Set; Holz, kompl** **Set of wooden side panels, compl.**
	4	21.53.0510	Schraube Z IS M5x20 Screw Z IS M5x20
	4	21.53.0535	Schraube Z IS M5x35 Screw Z IS M5x35
	8	21.51.8460	Schraube LIN IS M4x20 Screw LIN IS M4x20
	2	**1.810.077.04**	**Klappgriff, kompl.** **Hinged handle, compl.**
	1	**1.810.078.00**	**Deckel fuer portable Ausfuehrung** **Cover for portable version**

8.2
Konsole
Console

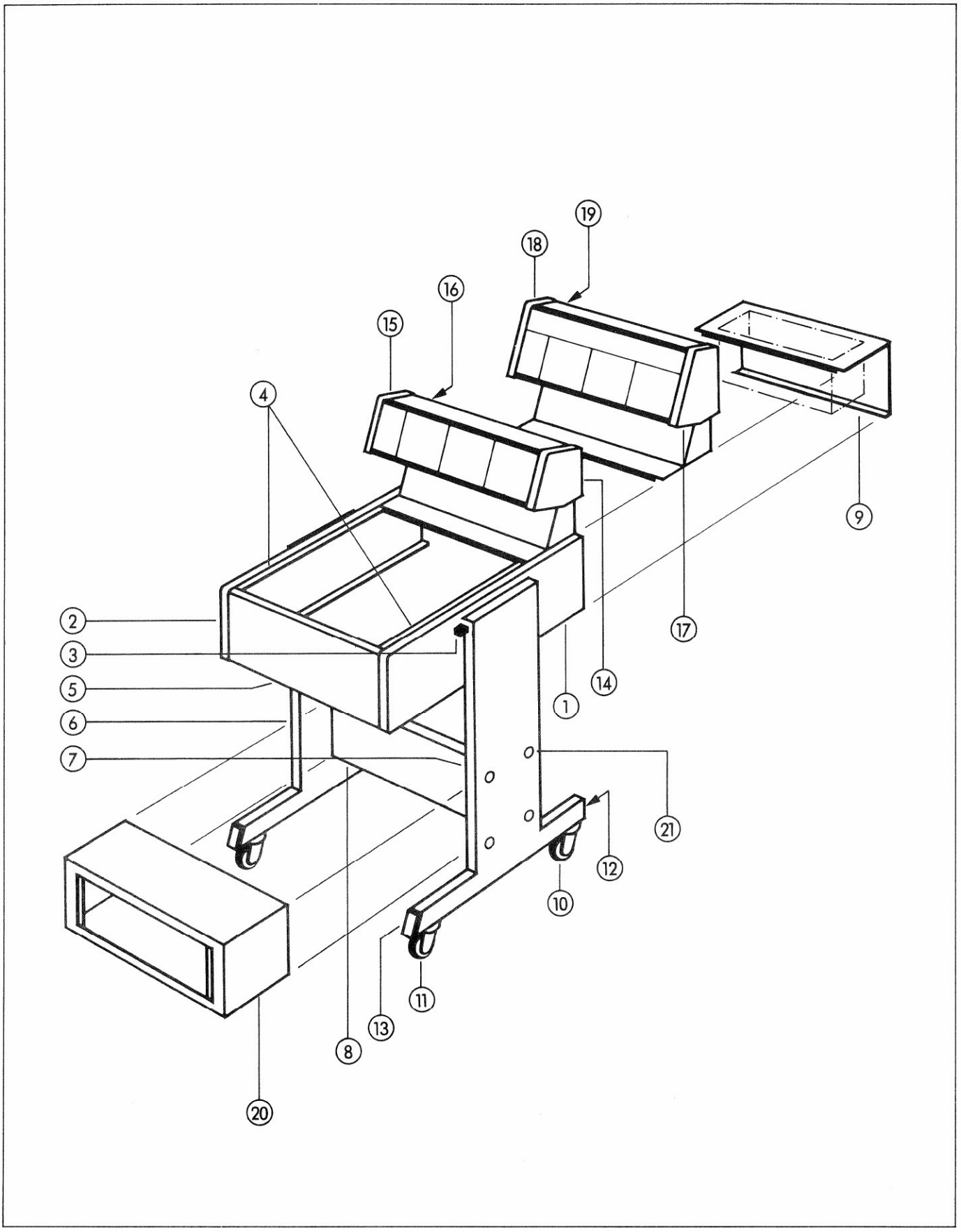

8.2
Konsole
Console

POS	QTY	ORDER NUMBER	BEZEICHNUNG / PART NAME
	1	**1.038.880.00**	**Konsole**
			Console
	4	21.99.0167	Schraube M6x16
			Screw M6x16
	4	23.99.0121	U-Scheibe
			Flat washer
01	1	1.038.880.03	Seitenwand Holz, rechts
			Side board wood, right
	6	21.53.0454	Schraube Z IS M4x6
			Screw Z IS M4x6
02	1	1.038.880.04	Seitenwand Holz, links
			Side board wood, left
	6	21.53.0454	Schraube Z IS M4x6
			Screw Z IS M 4x6
03	2	1.038.880.05	Taste
			Push button
04	2	1.038.880.21	Leiste
			Mounting angle
	6	21.26.2353	Schraube S KS M3x5
			Screw S KS M3x5
05	1	1.038.880.10	Frontblech
			Front cover, console
	4	21.51.8455	Schraube LIN M4x8
			Screw LIN M4x8
06	1	1.038.881.81	Bein, links
			Leg, left
	1	1.038.880.07	Abdeckung, links
			Side cover console, left
	1	1.038.880.36	Abdeckblech
			Side cover, inside
	8	21.51.8354	Schraube LIN M3x6
			Screw LIN M3x6
07	1	1.038.882.81	Bein, rechts
			Leg, rechts
	1	1.038.880.07	Abdeckung, rechts
			Side cover console, right
	1	1.038.880.36	Abdeckblech
			Side cover, inside
	8	21.51.8354	Schraube LIN M3x6
			Screw LIN M3x6
08	1	1.038.883.00	Traverse
			Traverse
09	1	1.038.885.00	Abdeckblech hinten kpl.
			Rear cover back cpl.
or	1	1.038.884.00	Abdeckung mit Ablagewanne
			Rear cover with storage bin
		33.02.0110	Verschlusszapfen
			Spec. lock
10	2	33.04.0202	Lenkrolle
			Castor
	2	21.59.5571	Gewindestift IS M6x14
			Set screw IS M6x14
11	2	33.04.0203	Lenkrolle mit Bremse
			Castor with break
	2	21.59.5571	Gewindestift IS M6x14
			Set screw IS M6x14
12	2	1.038.880.01	Abschlusspfropfen
			Plastic plug
13	2	1.038.880.02	Abschlusspfropfen
			Plastic plug
	1	**1.038.886.00**	**VU-Panel**
			VU-Panel
	4	21.99.0167	Schraube M6x16
			Screw M6x16
	4	23.99.0121	U-Scheibe
			Flat washer
14	1	1.038.886.01	Blende Holz, rechts
			Side panel penthouse wood, right
	4	21.53.0454	Schraube Z IS M4x6
			Screw Z IS M4x6
15	1	1.038.886.02	Blende Holz, links
			Side panel penthouse wood, left

POS	QTY	ORDER NUMBER	BEZEICHNUNG / PART NAME
	4	21.53.0454	Schraube Z IS M4x6 Screw Z IS M4x6
16	1	1.038.886.08	Rueckwand Rear panel, penthouse
	4	33.02.0110	Verschlusszapfen Spec. lock
	1	**1.038.888.00**	**Synchronizer + VU-Panel** **Synchronizer + VU-Panel**
	4	21.99.0167	Schraube M6x16 Screw M6x16
	4	23.99.0121	U-Scheibe Flat washer
		21.812.171.81	Blindabdeckung grau Filler panel grey
17	1	1.038.888.01	Blende Holz, rechts Side panel penthouse wood, right
	4	21.53.0454	Schraube Z IS M4x6 Screw Z IS M4x6
18	1	1.038.888.02	Blende Holz, links Side panel penthouse wood, left
	4	21.53.0454	Schraube Z IS M4x6 Screw Z IS M4x6
19	1	1.038.888.08	Rueckwand rear panel, penthouse
	4	33.02.0110	Verschlusszapfen Spec. lock
20	**1**	**1.038.890.00**	**Rackunterbau** **Pedestal rack**
	8	21.53.0556	Schraub Z IS M6x10 Screw Z IS M6x10
	12	21.99.0167	Schraube M6x16 Screw M6x16
	12	23.99.0121	U-Scheibe Flat washer
		1.918.001.00	Blindabdeckung weiss (Alu) 1unit Filler panel white (alu) 1unit
		1.918.002.00	Blindabdeckung weiss (Alu) 2unit Filler panel white (alu) 2unit
		1.918.003.00	Blindabdeckung weiss (Alu) 3unit Filler panel white (alu) 3unit
21	8	31.03.0106	Abdeckkappe D18.5/15.9mm Cover cap D18.5/15.9mm

8.3
KOPFTRAEGER
HEAD BLOCK ASSEMBLY

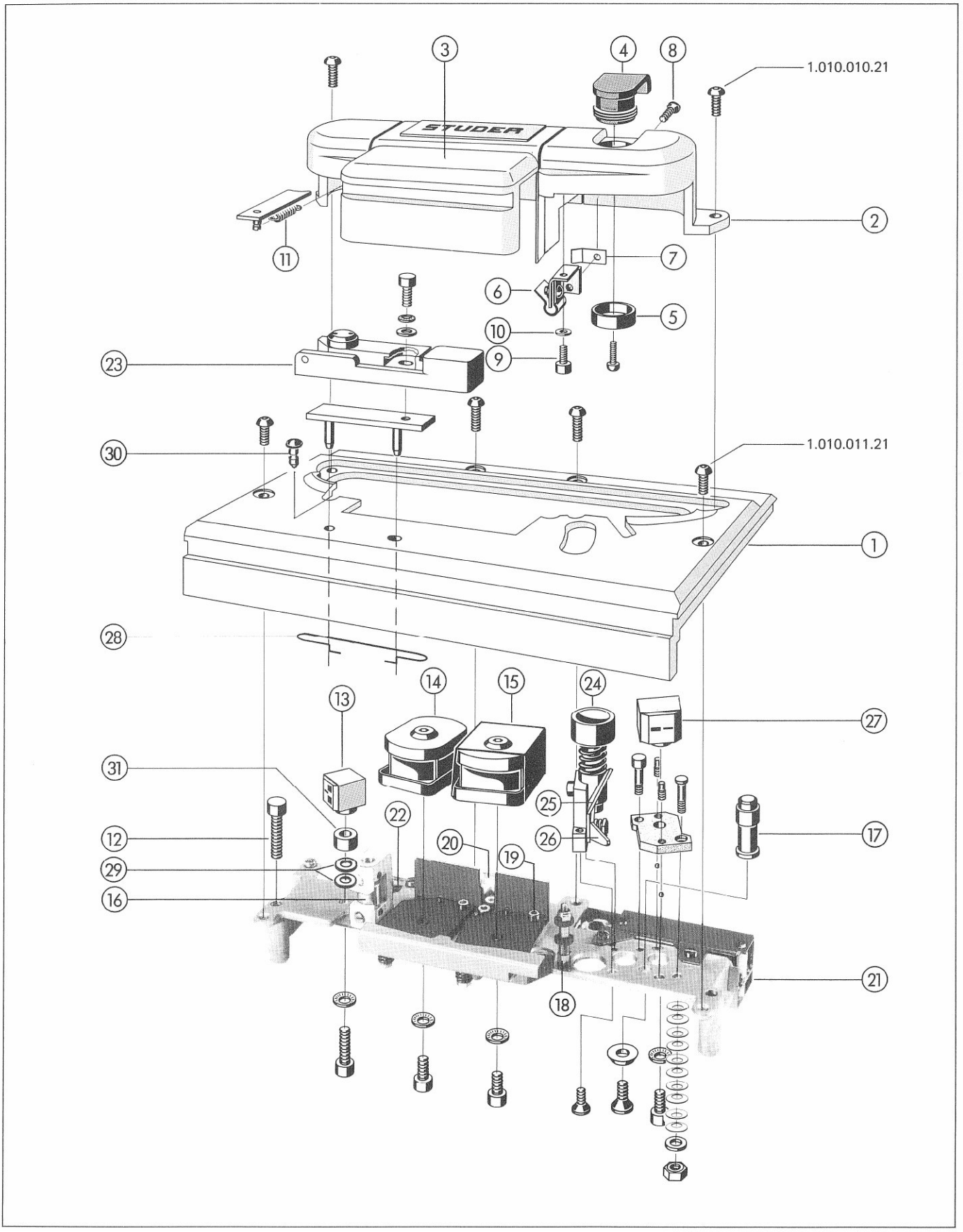

8.3
Kopfträger
Head Block Assembly

Index	Qty.	Order No.	Part Name	Specification
1	1	1.810.186.01	Kopfträger–Abdeckung Headblock cover plate	kompl./compl. 1.810.186.00
2	1	1.810.171.00	Kopfabdeckung Head cover	
	1	1.810.172.01	Zusatzabschirmung Additional screening	
3		1.810.176.00	Abschirmklappe Screening flap	
4	1	1.810.185.02	Abdeckkappe Cover Cap	
5	1	1.810.185.03	Kappe Cap	
	1	20.25.0105	Schraube Z–Kerb Screw Z, self–tapping	
6	1	1.810.178.00	Halterung rechts, genietet Right–hand holder, riveted	
7	1	1.810.180.08	Erdfeder Grounding spring	
8	1	21.51.2354	Schraube S IS Screw S IS	M3x6 M3x6
9	1	21.53.0353	Schraube Z IS Screw Z IS	M3x5 M3x5
10	1	24.16.1030	Sicherungsscheibe Lock washer	D3,2 / 5,5 D3.2 / 5.5
11	1	1.080.230.04	Zugfeder Tension spring	
12	3	21.53.0465	Schraube Z IS Screw Z IS	M4x35 M4x35
		1.020.880.00	Kopfträger kompl. MONO Head block compl. MONO	
13	1	1.116.097.81	Löschkopf MONO Erase head MONO	
	1	21.53.0455	Schraube Z IS Screw Z IS	M4x8 M4x8
	1	24.16.1040	Sicherungsscheibe Lock washer	D4,3 / 7 D4.3 / 7
14	1	1.317.610.00	Aufnahmekopf MONO Record head MONO	
	1	21.53.0455	Schraube Z IS Screw Z IS	M4x8 M4x8
	1	24.16.1040	Sicherungsscheibe Lock washer	D4,3 / 7 D4.3 / 7
15	1	1.317.616.00	Wiedergabekopf MONO Reproduce head MONO	
	1	21.53.0455	Schraube Z IS Screw Z IS	M4x8 M4x8
	1	24.16.1040	Sicherungsscheibe Lock washer	D4,3 / 7 D4.3 / 7
	1	1.020.880.24	Zusatzabschirmung Additional screening	
16	1	1.020.892.00	Beruhigungsrolle kompl. Anti–scrape flutter roller compl.	
	2	21.53.0355	Schraube Z IS Screw Z IS	M3x8 M3x8
17	1	1.020.850.24	Umlenkbolzen rechts Right–hand tape guide pin	
	1	1.010.002.23	Spez. U–Scheibe, massiv Spec. washer, massive	
	1	21.51.2354	Schraube S IS Screw S IS	M3x6 M3x6
18	1	1.020.859.00	Bandführung kompl. Tape guide compl.	
19	2	1.020.710.05	Taumelschraube (Z IS) Swivel screw (Z IS)	
20	1	1.020.880.05	Erdfeder Grounding spring	

Index	Qty.	Order No.	Part Name	Specification
21	1	1.810.710.81	Vorverstärker MONO Preamplifier MONO	
	2	21.01.0277	Schraube Z Screw Z	M2,5x4 M2.5x4
	2	24.16.1025	Sicherungsscheibe Lock washer	D2,7 / 5 D2.7 / 5
22	1	54.13.1003	Stecker, Typ D, 25 polig, Lötanschlüsse Connector, D type, 25 pin, solder contacts	
23	1	1.810.402.81	Markiervorrichtung kompl. Tape marker compl.	
or	2	1.810.186.02	Abdeckzapfen Cover peg	
24	1	1.020.888.83	Bandschere kompl. Tape cutting scissors compl.	
		21.51.2354	Schraube S IS Screw S IS	M3x6 M3x6
25	1	1.020.888.10	Feste Klinge Fixed blade	
26	1	1.020.888.11	Bewegliche Klinge Moving blade	
28	1	1.810.400.05	Spannklammer Clamping spring	
29	4	1.010.070.23	Distanz Scheibe Washer	
30	2	1.810.186.02	Abdeckstopfen Stopper	
31	1	1.116.810.21	TC–Kopf distanzring TC head spacing ring	
		1.020.881.00	Kopfträger kompl. 2CH, 2mm Head block compl. 2CH, 2mm wie 1.020.880.00 ausgenommen: like 1.020.880.00 except:	
13	1	1.116.092.81	Löschkopf 2CH Erase head 2CH	
14	1	1.317.620.00	Aufnahmekopf 2CH, 2mm Record head 2CH, 2mm	
15	1	1.317.626.00	Wiedergabekopf 2CH, 2mm Reproduce head 2CH, 2mm	
21	1	1.810.711.81	Vorverstärker 2CH Preamplifier 2CH	
		1.020.882.00	Kopfträger kompl. 2CH, 0,75mm Head block compl. 2CH, 0.75mm wie 1.020.880.00 ausgenommen: like 1.020.880.00 except:	
13	1	1.116.092.81	Löschkopf 2CH Erase head 2CH	
14	1	1.317.630.00	Aufnahmekopf 2CH, 0,75mm Record head 2CH, 0.75mm	
15	1	1.317.636.00	Wiedergabekopf 2CH, 0,75mm Reproduce head 2CH, 0.75mm	
21	1	1.810.711.81	Vorverstärker 2CH Preamplifier 2CH	
		1.020.883.00	Kopfträger 2CH, 2mm, Time–Code Head block 2CH, 2mm, time code wie 1.020.880.00 ausgenommen: like 1.020.880.00 except:	
13	1	1.116.810.01	Löschkopf 2CH TC Erase head 2CH TC	
	1	1.116.810.21	Distanzhülse Spacer bush	
	x	1.062.210.08	Distanzscheibe 0,1mm (x = 0, 1 oder 2) Spacer shim 0.1mm (x = 0, 1 or 2)	
	1	21.53.0471	Schraube Z IS Screw Z IS	M4x14 M4x14
	1	24.16.1040	Sicherungsscheibe Lock washer	D 4,3 / 7 D 4.3 / 7
14	1	1.317.620.00	Aufnahmekopf 2CH, 2mm Record head 2CH, 2mm	
15	1	1.317.626.00	Wiedergabekopf 2CH, 2mm Reproduce head 2CH, 2mm	

Index	Qty.	Order No.	Part Name	Specification
27	1	1.116.810.02	Kombikopf Time–Code Combi–head time code	
	1	21.53.0455	Schraube Z IS Screw Z IS	M4x8 M4x8
	1	24.16.1040	Sicherungsscheibe Lock washer	D 4,3 / 7 D 4.3 / 7
21	1	1.810.711.81	Vorverstärker 2CH Preamplifier 2CH	
		1.020.884.00	Kopfträger kompl. 2CH, 0.75mm Head block compl. 2CH, 0.75mm wie 1.020.882.00 ausgenommen: like 1.020.882.00 except:	
13	1	1.116.097.81	Löschkopf MONO Erase head MONO	
		1.020.885.00	Kopfträger kompl. 2CH, 2mm Head block compl. 2CH, 2mm wie 1.020.881.00 ausgenommen: like 1.020.881.00 except:	
13	1	1.116.814.00	Löschkopf 2mm (ohne time code–Löschung) Erase head 2mm (without time code erasure)	

Index	Qty.	Order No.	Part Name Specification
		1.020.880.81	Kopfträger kompl. MONO Head block compl. MONO wie 1.020.880.00 ausgenommen: like 1.020.880.00 except:
14	1	1.318.610.00	Aufnahmekopf MONO Record head MONO
15	1	1.318.616.00	Wiedergabekopf MONO Reproduce head MONO
21	1	1.810.714.81	Vorverstärker MONO Preamplifier MONO
		1.020.881.81	Kopfträger kompl. 2CH, 2mm Head block compl. 2CH, 2mm wie 1.020.881.00 ausgenommen: like 1.020.881.00 except:
14	1	1.318.620.00	Aufnahmekopf 2CH, 2mm Record head 2CH, 2mm
15	1	1.318.626.00	Wiedergabekopf 2CH, 2mm Reproduce head 2CH, 2mm
21	1	1.810.717.81	Vorverstärker 2CH Preamplifier 2CH
		1.020.882.81	Kopfträger kompl. 2CH, 0.75mm Head block compl. 2CH, 0.75mm wie 1.020.882.00 ausgenommen: like 1.020.882.00 except:
14	1	1.318.630.00	Aufnahmekopf 2CH, 0.75mm Record head 2CH, 0.75mm
15	1	1.318.636.00	Wiedergabekopf 2CH, 0.75mm Reproduce head 2CH, 0.75mm
21	1	1.810.717.81	Vorverstärker 2CH Preamplifier 2CH
		1.020.883.81	Kopfträger kompl. 2CH, 2mm, Time-code Head block compl. 2CH, 2mm, time code wie 1.020.880.00 ausgenommen: like 1.020.880.00 except:
14	1	1.318.620.00	Aufnahmekopf 2CH, 2mm Record head 2CH, 2mm
15	1	1.318.626.00	Wiedergabekopf 2CH, 2mm Reproduce head 2CH, 2mm
21	1	1.810.717.81	Vorverstärker 2CH Preamplifier 2CH
		1.020.884.81	Kopfträger kompl. 2CH, 0.75mm Head block compl. 2CH, 0.75mm wie 1.020.882.81 ausgenommen: like 1.020.882.81 except:
13	1	1.116.097.81	Löschkopf MONO Erase head MONO
		1.020.885.81	Kopfträger kompl. 2CH, 2mm Head block compl. 2CH, 2mm wie 1.020.881.81 ausgenommen: like 1.020.881.81 except:
13	1	1.116.814.00	Löschkopf 2mm (ohne time code-Löschung) Erase head 2mm (without time code erasure)

8.4
BANDZUGWAAGE RECHTS
RIGHT-HAND TAPE TENSION SENSOR

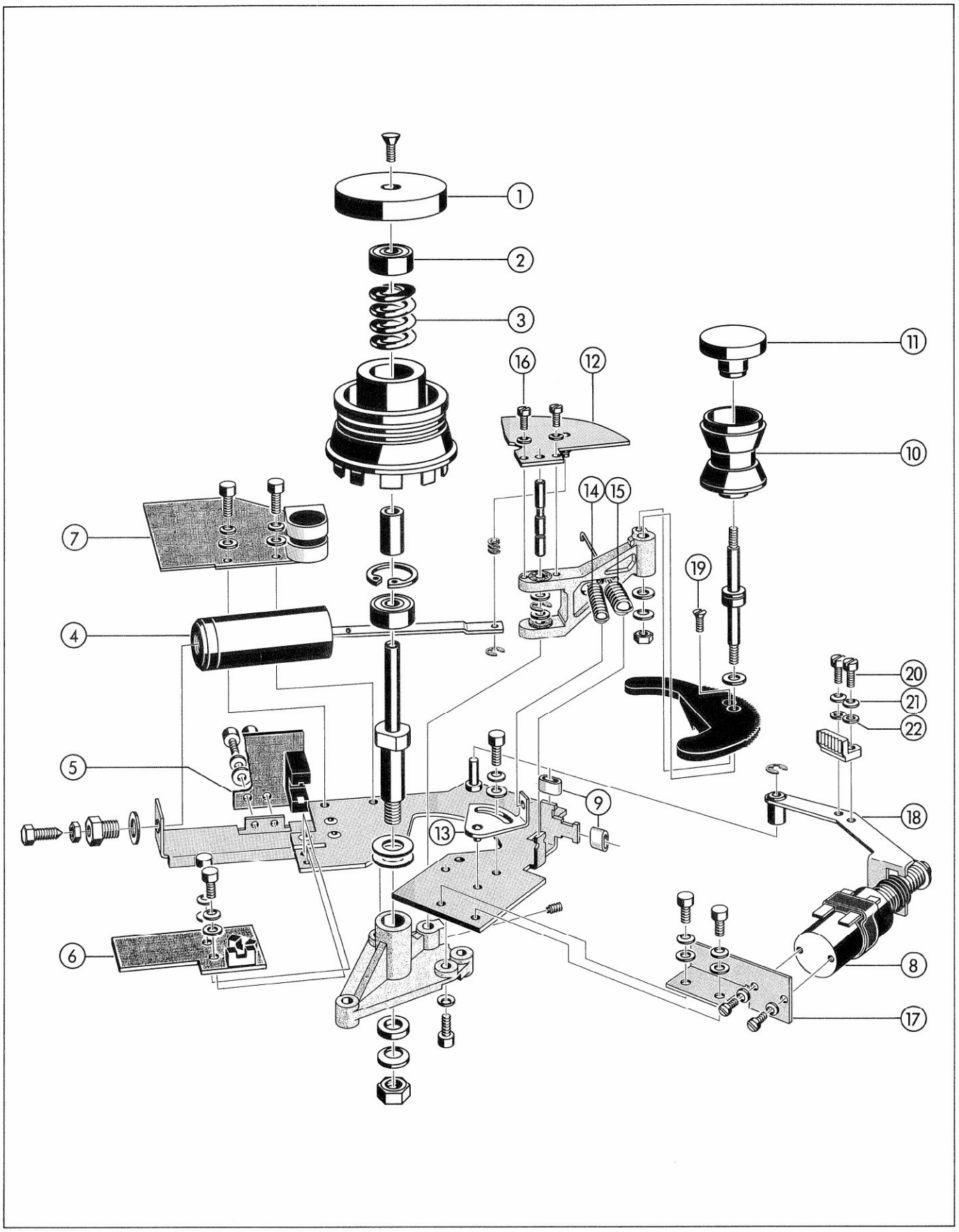

8.4
BANDZUGWAAGE RECHTS
RIGHT-HAND TAPE TENSION SENSOR

POS	QTY	ORDER NUMBER	BEZEICHNUNG / PART NAME
	3	21.53.0357	Schraube Z IS M3x12 Screw Z IS M3x12
	3	23.01.1032	Unterlagscheibe D 3,2/6 Washer D 3.2/6
	3	24.16.1030	Sicherungsscheibe D 3,2/5,5 Lock washer D 3.2/5.5
		1.810.120.00	**Bandzugwaage rechts** **Right-hand tape tension sensor**
	1	**1.810.150.00**	**Umlenkrolle rechts kompl.** **Right-hand guide roller compl.**
			bestehend aus: comprising:
01	1	1.810.150.03	Deckel Cover
	1	21.51.2356	Schraube S IS M3x10 Screw S IS M3x10
02	2	41.99.0106	Kugellager Ball bearing
03	2	1.010.091.37	Druckfeder D15,6 Pressure spring D15.6
04	1	1.810.116.00	Daempfungspumpe rechts kompl. (Daempfung im Herstellerwerk eingestellt!) Dashpot rechts compl. (damping factory adjusted!)
05	1	1.810.729.00	Bandendsensorprint kompl. Tape end sensor board compl.
		21.53.0353	Schraube Z IS M3x5 Screw Z IS M3x5
06	1	1.810.731.00	Abtasterprint kompl. Move sensor board compl.
07	1	1.810.728.81	Bandzugprint rechts kompl. (ESE!) Right-hand tape tension sensor board compl. (ESE!)
	2	21.53.0353	Schraube Z IS M3x5 Screw Z IS M3x5
08	1	1.810.117.00	EDIT-Magnet kompl. EDIT solenoid compl. {+ = vio, - = grn}
09	2	1.067.170.14	Gummidaempfung Rubber damping
10	1	1.810.145.00	Fuehrungsrolle kompl. Guide roller compl.
11	1	1.167.831.00	Kappe kompl. Cap compl.
12	1	1.810.122.00	Blende rechts kompl. Right-hand mask compl.
13	1	1.810.124.00	Spanner rechts kompl. Right-hand stretcher
14	1	1.010.032.37	Zugfeder Tension spring
15	1	1.010.105.37	Zugfeder Tension spring
16	2	21.01.0203	Schraube Z M2x5 Screw Z M2x5
17	1	1.810.120.01	Magnethalter rechts Right-hand solenoid mounting
18	1	1.810.123.00	Hebel rechts Right-hand lever
19	1	21.01.2278	Schraube S M2.5x5 {zu Zahnscheibe} Screw S M2.5x5 {to toothed disk}
			zu Zahnsegment: to toothed segment:
20	2	21.01.0279	Schraube Z M2,5x6 Screw Z M2.5x6
21	2	24.16.1025	Sicherungsscheibe D 2,7/4,8 Lock washer D 2.7/4.8
22	2	23.01.1027	Unterlagscheibe D 2,7/5 Washer D 2.7/5

8.5
BANDZUGWAAGE LINKS
LEFT-HAND TAPE TENSION SENSOR

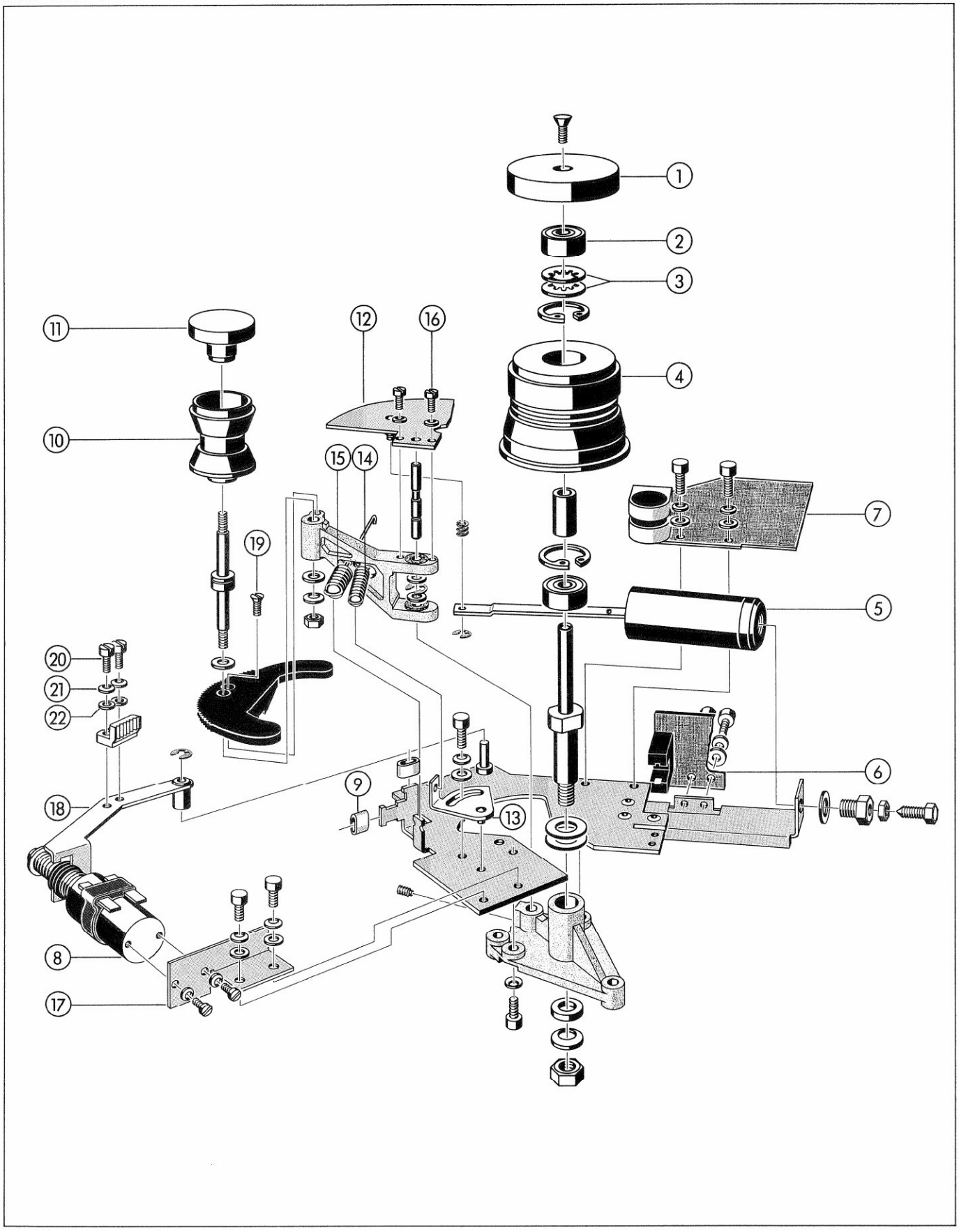

8.5
BANDZUGWAAGE LINKS
LEFT-HAND TAPE TENSION SENSOR

POS	QTY	ORDER NUMBER	BEZEICHNUNG / PART NAME
	3	21.53.0357	Schraube Z IS M3x12 Screw Z IS M3x12
	3	23.01.1032	Unterlagscheibe D 3.2/6 Washer D 3.2/6
	3	24.16.1030	Sicherungsscheibe D 3,2/5,5 Lock washer D 3.2/5.5
		1.810.110.00	**Bandzugwaage links** **Left-hand tape tension sensor**
	1	**1.167.837.00**	**Umlenkrolle links kompl.** **Left-hand guide roller compl.** bestehend aus: comprising:
01	1	1.167.837.02	Deckel Cover
	1	21.51.2356	Schraube S IS M3x10 Screw S IS M3x10
02	2	41.99.0106	Kugellager Ball bearing
03	2	37.02.0203	Tellerfeder Spacer sleve
04	1	1.167.837.01	Umlenkrolle links Left-hand guide roller
05	1	1.810.115.00	Daempfungspumpe links kompl. (Daempfung im Herstellerwerk eingestellt!) Dashpot left compl. (damping factory adjusted!)
06	1	1.810.729.00	Bandendsensorprint kompl. Tape end sensor board compl.
07	1	1.810.730.81	Bandzugprint links kompl. (ESE!) Left-hand tape tension sensor board compl. (ESE!)
	2	21.53.0353	Schraube Z IS M3x5 Screw Z IS M3x5
08	1	1.810.117.00	EDIT-Magnet kompl. EDIT solenoid compl. {+ = vio, - = grn}
09	2	1.067.170.14	Gummidaempfung Rubber damping
10	1	1.810.145.00	Fuehrungsrolle kompl. Guide roller compl.
11	1	1.167.831.00	Kappe Cap
12	1	1.810.112.00	Blende links kompl. Left-hand mask compl.
13	1	1.810.114.00	Spanner links kompl. Left-hand stretcher compl.
14	1	1.010.032.37	Zugfeder Tension spring
15	1	1.010.105.37	Zugfeder Tension spring
16	2	21.01.0203	Schraube Z M2x5 Screw Z M2x5
17	1	1.810.110.03	Magnethalter links Left-hand solenoid mounting
17	1	1.810.113.00	Hebel links Left-hand lever
19	1	21.01.2278	Schraube S M2,5x5 {zu Zahnscheibe} Screw S M2.5x5 {to toothed disk}
			zu Zahnsegment: to toothed segment:
20	2	21.01.0279	Schraube Z M2,5x6 Screw Z M2.5x6
21	2	24.16.1025	Sicherungsscheibe D 2,7/4,8 Lock washer D 2.7/4.8
22	2	23.01.1027	Unterlagscheibe D 2,7/5 Washer D 2.7/5

8.6
ANDRUCKAGGREGAT
PRESSURE ROLLER ASSEMBLY

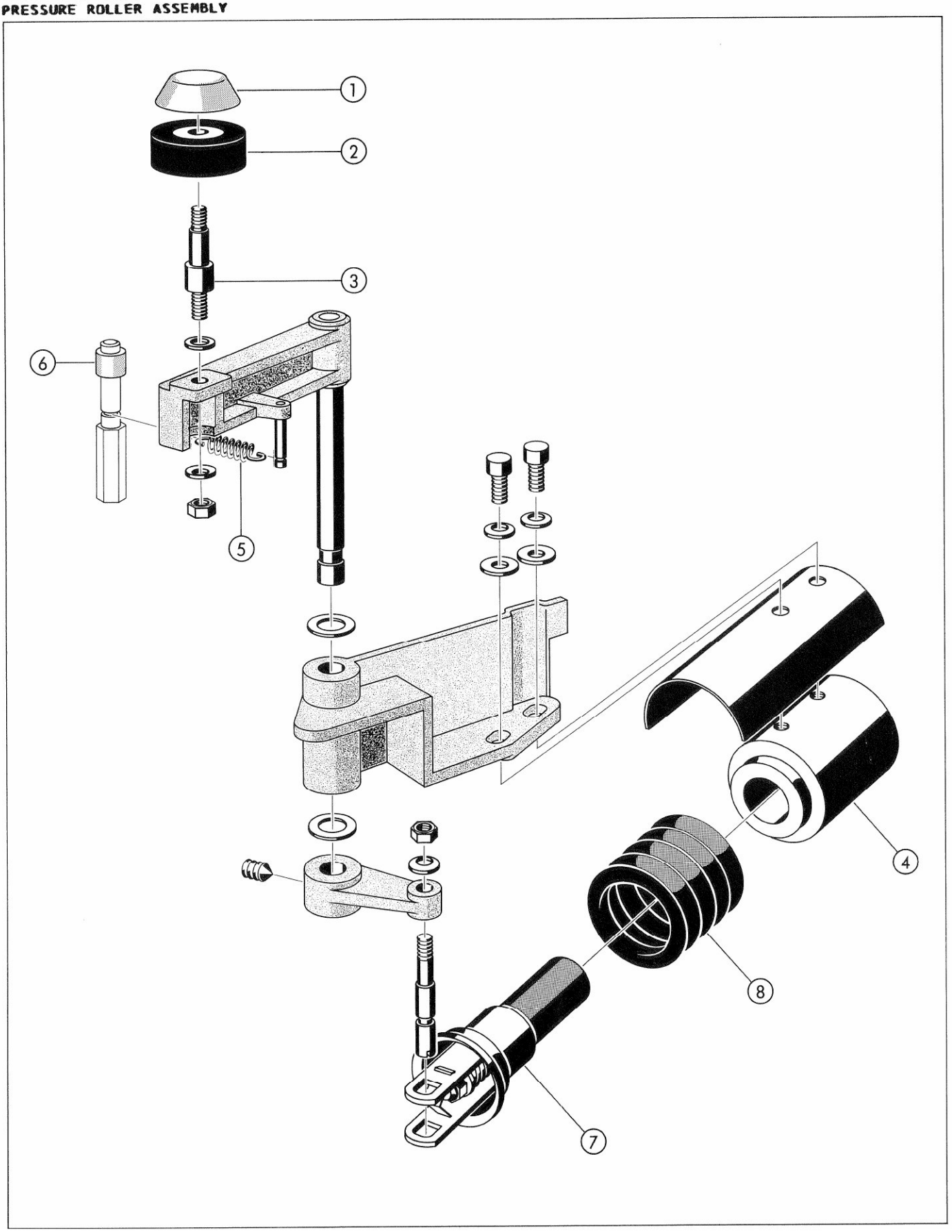

8.6
ANDRUCKAGGREGAT
PRESSURE ROLLER ASSEMBLY

POS	QTY	ORDER NUMBER	BEZEICHNUNG / PART NAME
	3	21.53.0457	Schraube Z IS M4x12 Screw Z IS M4x12
		1.810.100.81	Andruckaggregat Pressure roller assembly
01	1	1.810.106.00	Deckel (Kappe) Cover (cap)
02	1	1.167.178.00	Andruckrolle Pressure roller
03	1	1.167.170.10	Achse Axle
		1.062.210.08	Distanzscheibe 0,1 mm Spacer shim 0.1 mm
		1.062.210.09	Distanzscheibe 0,2 mm Spacer shim 0.2 mm
	1	24.16.1040	Sicherungsscheibe D 4,3/8 Lock washer D 4.3/8
	1	22.01.5040	Mutter M4 Hex nut M4
04	1	1.014.718.00	Andruckmagnet Pressure solenoid (+ = vio, - = gry)
	2	21.53.0455	Schraube Z IS M4x8 Screw Z IS M4x8
	2	23.01.2043	Unterlagscheibe D 4,3/8 Washer D 4.3/8
	2	24.16.1040	Sicherungsscheibe D 4,3/7 Lock washer D 4.3/7
05	1	1.010.107.37	Zugfeder Tension spring
06	1	1.067.170.14	Gummi-Anschlagschlauch Rubber damping hose
07	1	1.810.101.00	Anker kompl. mit Buegel Plunger compl. with stirrup
08	1	1.810.100.08	Gummibalg Rubber bellows

8.7
BANDABHEBUNG
TAPE LIFT ASSEMBLY

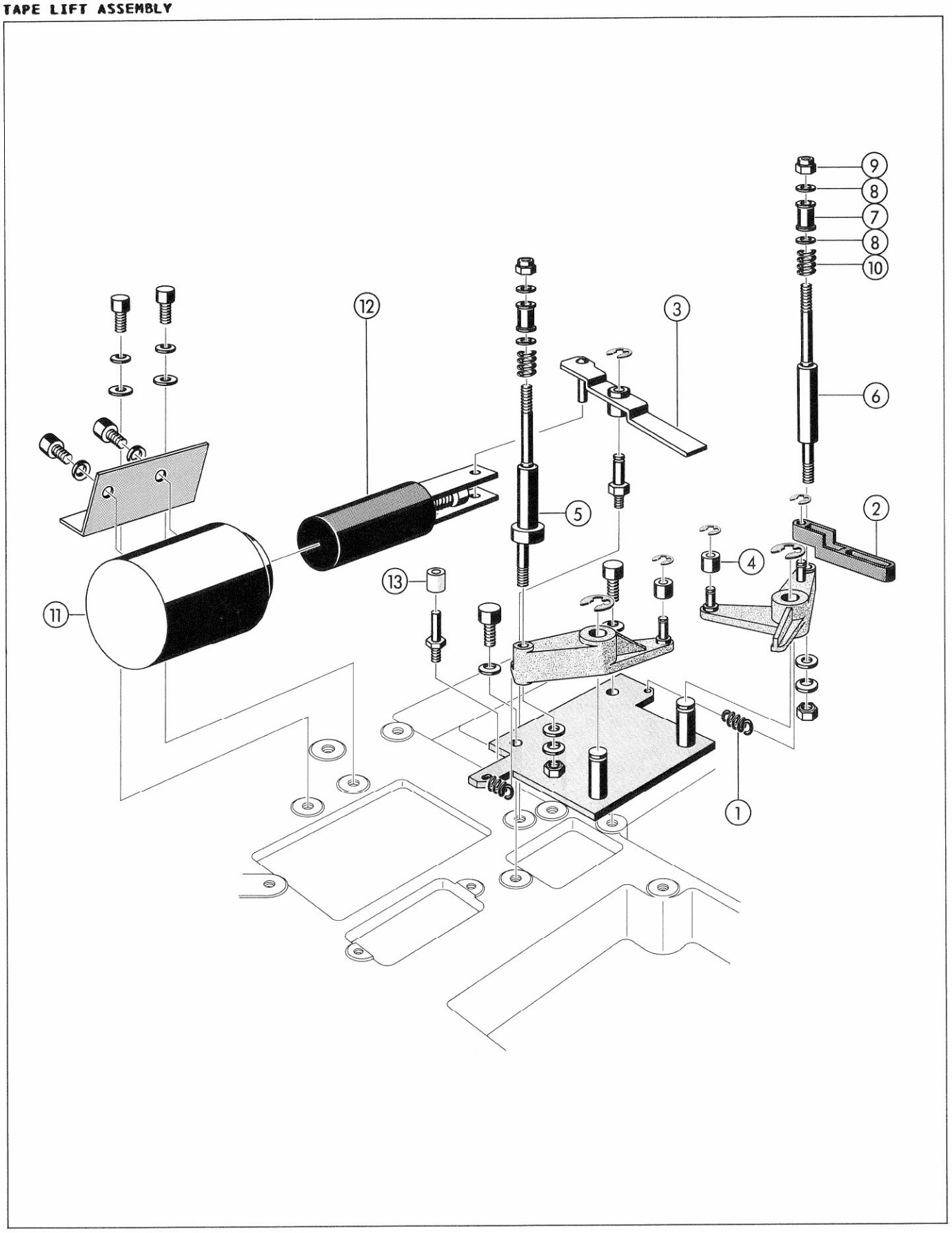

8.7
BANDABHEBUNG
TAPE LIFT ASSEMBLY

POS	QTY	ORDER NUMBER	BEZEICHNUNG / PART NAME
	2	21.53.0353	Schraube Z IS M3x5 Screw Z IS M3x5
	2	24.16.1030	Sicherungsscheibe D 3,2/5,5 Lock washer D 3.2/5.5
		1.810.130.00	Bandabhebung Tape lift assembly
01	2	1.020.256.07	Zugfeder Tension spring
02	1	1.810.130.12	Kunststoff-Lasche Plastic shin
	1	24.16.3019	Wellensicherung 1,9 Circlip 1.9
03	1	1.810.135.00	Hebel Lever
	1	24.16.3040	Wellensicherung 4,0 Circlip 4.0
04	2	1.810.130.08	Lagerbuchse Bearing bush
	1	24.16.3019	Wellensicherung 1,9 Circlip 1.9
05	1	1.810.130.14	Abhebebolzen links Tape lift bolt left
06	1	1.810.130.10	Abhebebolzen rechts Tape lift bolt right
07	1	1.810.130.09	Fuehrungshuelse Guide bush
08	2	1.810.130.13	Fuehrungsscheibe Guide washer
09	1	22.99.0112	Mutter M3, selbstsichernd Hex nut M3, self locking
10	1	1.020.820.12	Druckfeder Pressure spring
11	1	1.014.718.00	Magnet Solenoid
	4	21.53.0454	Schraube Z IS M4x6 Schrew Z IS M4x6
	2	23.01.1043	Unterlagscheibe D 4,3/8 Washer D 4.3/8
	4	24.16.1040	Sicherungsscheibe D 4,3/7 Lock washer D 4.3/7
12	1	1.810.136.00	Anker kompl. Plunger compl.
13	1	1.067.170.14	Daempfungsgummi Damping rubber

8.8
BANDBREMSEN
TAPE BRAKES

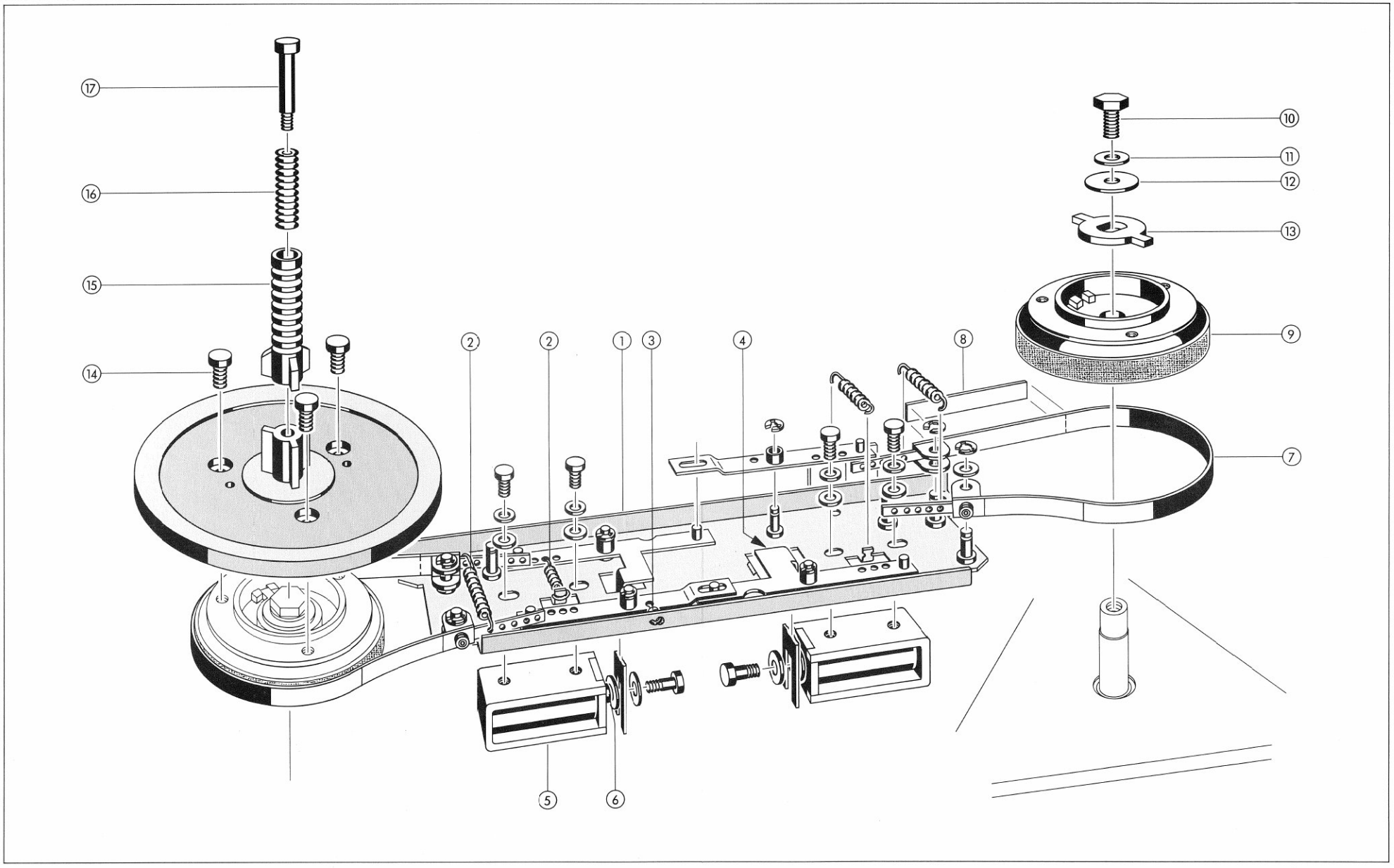

8.8
BANDBREMSEN
TAPE BRAKES

POS	QTY	ORDER NUMBER	BEZEICHNUNG / PART NAME
	3	21.53.0354	Schraube Z IS M3x6 Screw Z IS M3x6
	3	23.01.2032	Unterlagscheibe D 3,2/7 Washer D 3,2/7
	3	24.16.1030	Sicherungsscheibe D 3,2/5.5 Lock washer D 3.2/5.5
	1	**1.810.165.00**	**Bandbremse kompl.** **Tape brakes compl.**
01	1	1.810.166.00	Bremschassis kompl. Brake chassis compl.
02	4	1.077.100.13	Bremszugfeder Brake tension spring
03	1	1.010.101.37	Zugfeder Tension spring
04	1	1.067.100.36	Daempfungsgummi Damping rubber
05	2	1.014.806.00	Bremsmagnet Brake solenoid
06	2	1.014.808.00	Anker kompl. Solenoid armature compl.
07	2	1.167.866.00	Bremsband kompl. Brake band kompl.
08	4	65.99.0144	Bleiband, selbstklebend Lead band, self-adhesive
09	2	1.067.242.00	Bremsrolle kompl. Brake drum compl.
10	2	21.01.4455	6kt.-Schraube M4x8 Hex. screw M4x8
11	2	24.16.1040	Sicherungsscheibe D 4,3/7 Lock washer D 4.3/7
12	2	23.01.3043	Unterlagscheibe D 4,3/8 Washer D 4.3/8
13	2	1.067.100.27	Mitnehmerscheibe Driver plate
	2	**1.067.688.00**	**Wickelteller kompl.** **Reel support compl.**
	1	21.53.0454	Schraube Z IS M4x6 Screw Z IS M4x6
	1	24.16.2040	Faecherscheibe D 4,3/8 Starwasher D 4,3/8
14	6	21.38.0355	Schraube Z KS M3x8 Screw Z KS M3x8
15	2	1.067.688.01	3-Zack-Huelse Three-pronged bush
16	2	1.067.688.02	Druckfeder Pressure spring
17	2	1.062.390.02	Schaftschraube Shank screw

8.9
WICKELMOTOR
SPOOLING MOTOR

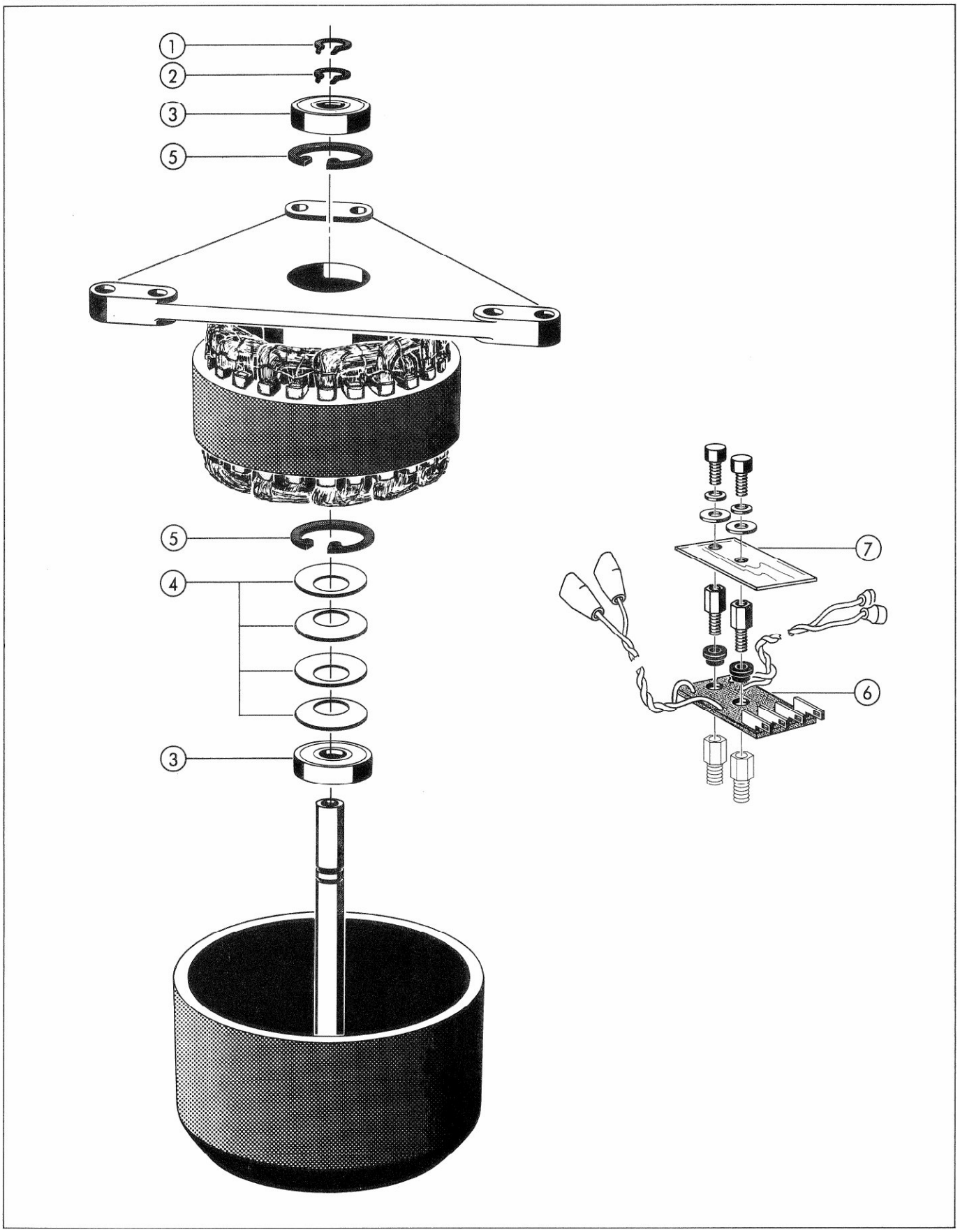

8.9
WICKELMOTOR
SPOOLING MOTOR

POS	QTY	ORDER NUMBER	BEZEICHNUNG / PART NAME
	3	21.53.0457	Schraube Z IS M4x12 Screw Z IS M4x12
	3	24.16.1040	Sicherungsscheibe D 4,3/7 Lock washer D 4.3/7
	2	**1.021.255.00**	**Wickelmotor kompl.** **Spooling motor compl.**
01	1	1.021.256.04	Aussensicherung geschliffen Circlip, surface polished
02	1	24.16.5080	Aussensicherung D 8 Circlip D 8
03	2	41.99.0105	Kugellager Ball bearing
04	4	37.02.0206	Tellerfeder Spring washer
05	2	24.16.4220	Innensicherung Circlip
06	1	1.810.726.00	Anschlussprint links Left-hand connection board
06	1	1.810.727.00	Anschlussprint rechts Right-hand connection board
	4	50.20.0404	Isolierdurchfuehrung Duct edge shield
	4	1.010.123.27	Gewindebolzen M3x6,5 Nut bolt M3x6.5
07	2	1.810.090.43	Beruehrungsschutz Protective cover
	4	21.53.0353	Schraube Z IS M3x5 Screw Z IS M3x5
	4	24.16.1030	Sicherungsscheibe D 3,2/5,5 Lock washer D 3.2/5.5
	4	23.01.3032	Unterlagscheibe D 3,2/9 Washer D 3.2/9

8.10
TONMOTOR
CAPSTAN MOTOR

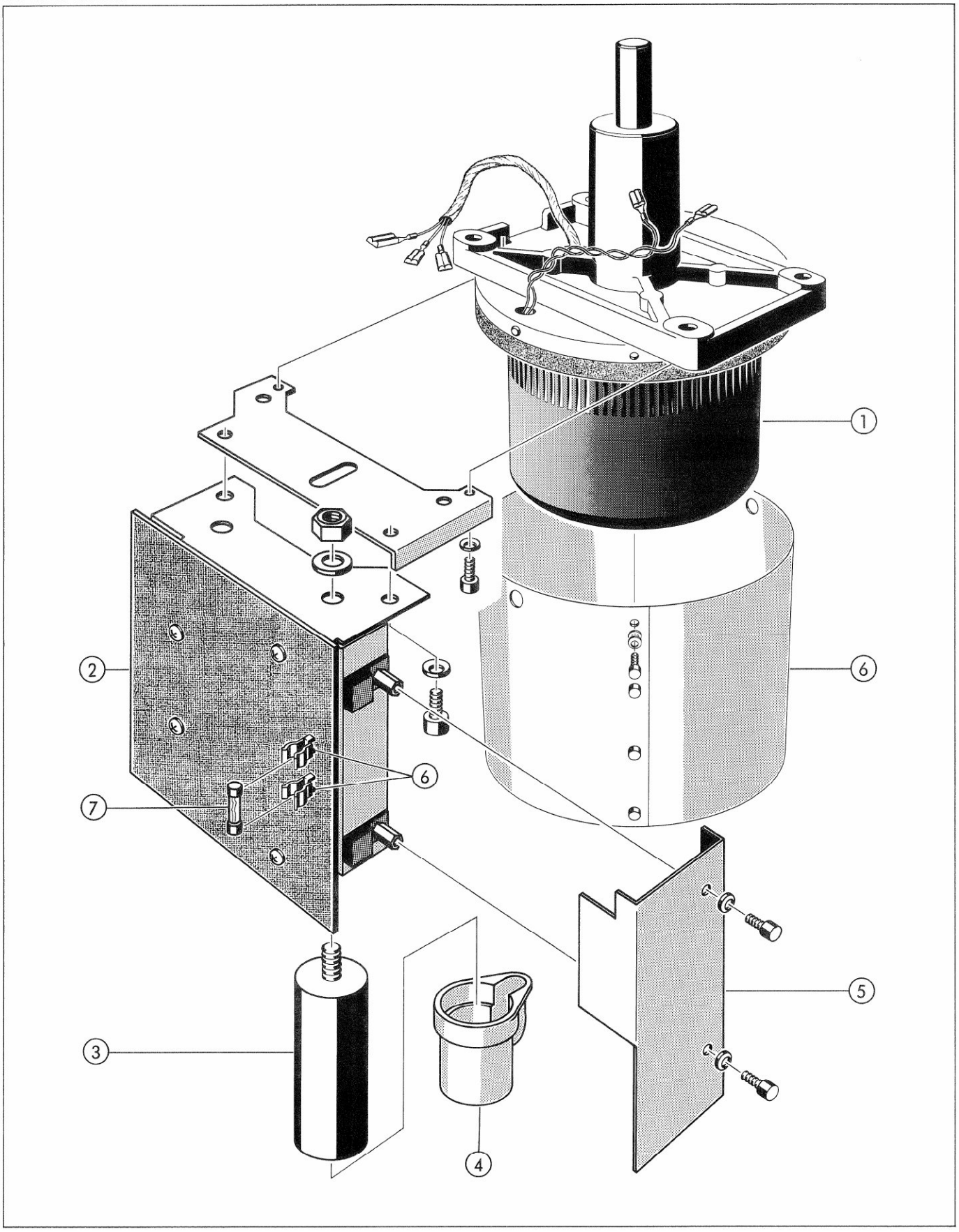

8.10
TONMOTOR
CAPSTAN MOTOR

ACHTUNG

Nach dem Wechsel von Tonmotor oder Tonmotorsteuerung muss die Tonmotor-Steuerung abgeglichen werden! Siehe Kapitel 3.4.6 .

CAUTION

When the capstan motor or the capstan motor control have been replaced, the capstan motor control has to be aligned! See section 3.4.6 .

POS	QTY	ORDER NUMBER	BEZEICHNUNG / PART NAME
	2	21.53.0467	Schraube Z IS M4x45 Screw Z IS M4x45
	2	1.010.093.27	Distanzhuelse D 4,2/8x25 Spacer bush D 4.2/8X25
	2	21.53.0459	Schraube Z IS M4x18 Screw Z IS M4x18
	4	24.16.1040	Sicherungsscheibe D 4,3/7 Lock washer D 4.3/7
		1.810.061.81	Tonmotor 2-polig, komplett mit Tonmotor-Steuerung (19/38/76 cm/s) Capstan motor 2 poles, compl. with capstan motor control (7.5/15/30 ips)
	or	1.810.060.81	Tonmotor 4-polig, komplett mit Tonmotor-Steuerung (9,5/19/38 cm/s) Capstan motor 4 poles, compl. with capstan motor control (3.75/7.5/15 ips)
01		1.021.365.81	Tonmotor 2-polig Capstan motor 2 poles
	or	1.021.366.81	Tonmotor 4-polig Capstan motor 4 poles
02	1	1.810.766.00	Tonmotorsteuerung kompl. (ESE!) Capstan motor control compl. (ESE!)
	2	21.53.0454	Schraube Z IS M4x6 Screw Z IS M4x6
03	1	59.14.6809	MP-Kondensator 8 uF/240 V (2-poliger Motor) MP capacitor 8 uF/240 V (2 pole motor)
	or	59.99.0452	MP-Kondensator 4,3 uF/160 V (4-poliger Motor) MP capacitor 4.3 uF/160 V (4 pole motor)
04	1	59.20.0124	Schutzkappe zu Kondensator 8 uF (d=30 mm) Protective cover to capacitor 8 uF (30 mm dia.)
	or	59.20.0122	Schutzkappe zu Kondensator 4,3 uF (d=25 mm) Protective cover to capacitor 4.3 uF (25 mm dia.)
05	1	1.810.761.02	Beruehrungsschutz Protective cover
06	1	1.021.320.11	Tonmotor-Abschirmung (nur 2-poliger Motor) Capstan motor shield (2 pole motor only)
	1	1.021.310.12	Tonmotor-Abschirmung (2- und 4-poliger Motor) Capstan motor shield (2 and 4 pole motors)
	1	1.810.001.05	Abschirmblech (Tonmotor/Audio) (wird nur benoetigt bei Ersatz eines 4-poligen durch einen 2-poligen Tonmotor) Screening sheet metal (capstan/audio) (only needed when replacing a 4 pole motor by a 2 pole motor)
	4	21.53.0354	Schraube Z IS M3x6 Screw Z IS M3x6
	4	24.16.1030	Sicherungsscheibe D 3,2/5,5 Lock washer D 3.2/5.5
06	1	53.03.0142	Sicherungshalter Fuse holder
07	1	51.01.0114	Sicherung T 500 mA Fuse T 500 mA (slow blow)

8.11
NETZTEIL
POWER SUPPLY

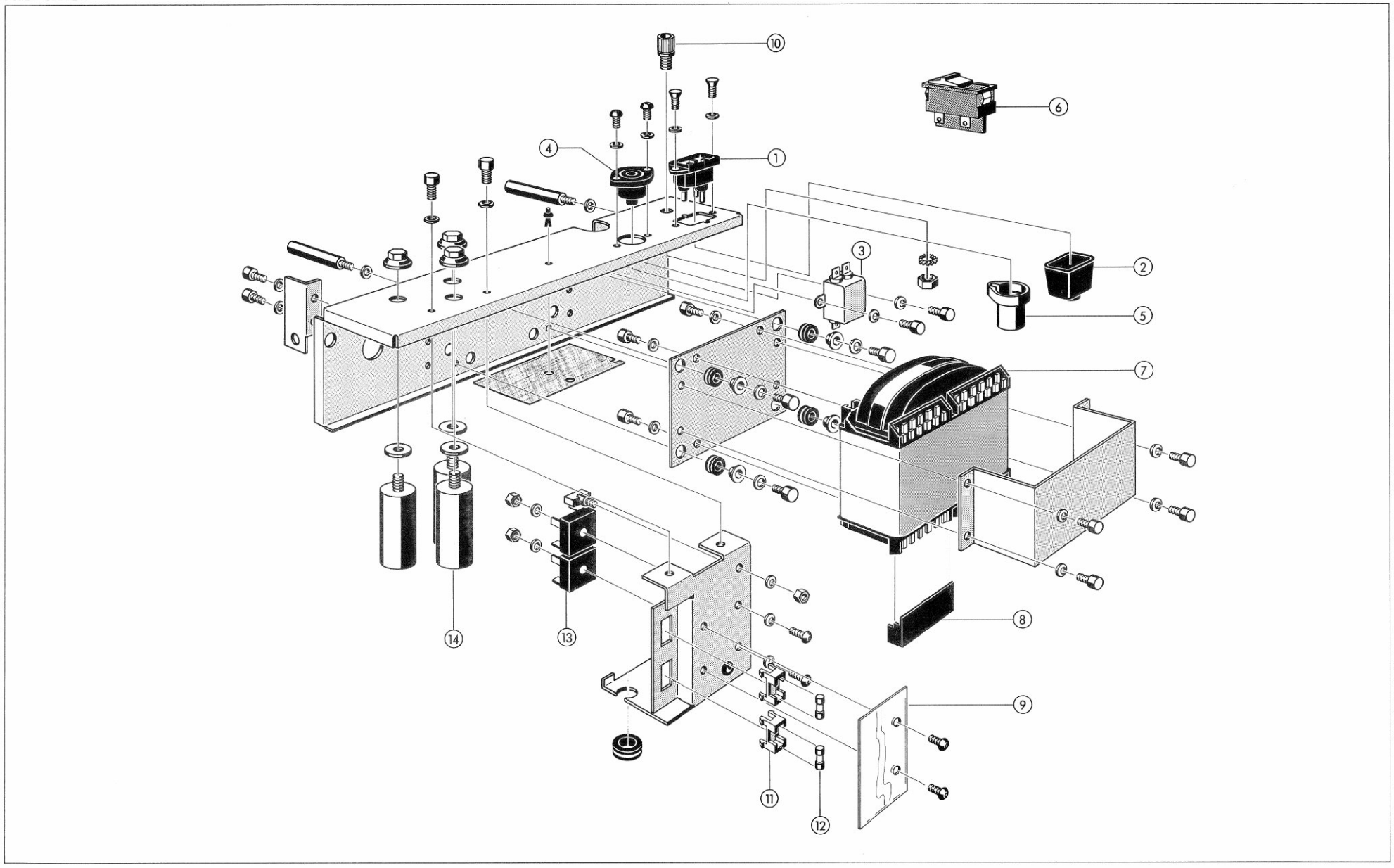

8.11
NETZTEIL
POWER SUPPLY

POS	QTY	ORDER NUMBER	BEZEICHNUNG / PART NAME
		1.810.210.00	**Netzteil kompl.**
			Power supply compl.
01	1	54.04.0109	Netzstecker
			Mains socket
	2	21.53.2354	Schraube S IS M3x6
			Screw S IS M3x6
02	1	54.04.0119	Isolierhaube
			Insulation cap
	1	1.810.210.16	Haltewinkel
			Bracket
03	1	89.01.0384	Netzfilter
			Mains filter
	2	21.53.0353	Schraube Z IS M3x5
			Screw Z IS M3x5
	1	1.810.210.14	Isolationsfolie (fuer Netzfilter-Anschluesse)
			Insulation film (for mains filter connectors)
04	1	53.03.0130	Netzspannungswaehler
			Mains voltage selector
	2	21.51.8355	Schraube LIN IS M3x8
			Screw LIN IS M3x8
	2	24.16.1030	Sicherungsscheibe D 3.2/5.5
			Lock washer D 3.2/5.5
	1	51.01.0119	Sicherung T 1.6 A; 5x20 mm (220 V)
			Fuse T 1.6 A; 5x20 mm (slow blow) (220 V)
	1	51.01.0122	Sicherung T 3.15 A; 5x20 mm (110 V)
			Fuse T 3.15 A; 5x20 mm (slow blow) (110 V)
05	1	1.810.210.09	Isolierhaube
			Insulation cap
06	1	55.12.0001	Netzschalter
			Mains switch
07	1	1.810.200.00	Netztransformator
			Mains transformer
	4	29.99.0117	Vierkantmutter M5
			Square nut M5
	8	24.16.1050	Sicherungsscheibe D5.3/9
			Lock washer D5.3/9
	8	21.53.0506	Schraube Z IS M5x10
			Screw Z IS M5x10
	1	1.810.210.08	Trafoplatte
			Transformer platform
	4	1.780.110.01	Gummituelle
			Rubber grommet
	4	1.780.110.02	Distanzbuechse
			Spacer bush
		1.810.210.15	Isolationsfolie (fuer Transformer-Anschluesse)
			Insulation film (for transformer connectors)
			Transformator-Abschirmung (nicht Ersatzteil)
			Mains transformer shield (not spare part)
	4	21.53.0353	Schraube Z IS M3x5
			Screw Z IS M3x5
08	4	1.010.044.63	Beruehrungsschutz fuer Trafoanschluesse
			Protective cover for transformer connections
09	1	1.810.210.06	Beruerungsschutz (Sicherungen)
			Protective cover (fuses)
	2	21.53.0454	Schraube Z IS M4x6
			Screw Z IS M4x6
	2	24.16.1040	Sicherungsscheibe D 4.3/7
			Lock washer D 4.3/7
10	1	1.010.001.53	Erdstuetzpunkt
			Ground connection
11	2	53.03.0144	Sicherungshalter
			Fuse holder
12	2	51.01.0124	Sicherung T 5 A; 5x20 mm
			Fuse T 5 A; 5x20 mm (slow blow)

POS	QTY	ORDER NUMBER	BEZEICHNUNG / PART NAME
13	2	70.01.0231	Gleichrichter 100 V/35 A
			Rectifier 100 V/35 A
	2	21.53.0471	Schraube Z IS M4x15
			Screw Z IS M4x15
	2	24.16.1040	Sicherungsscheibe D 4.3/7
			Lock washer D 4.3/7
	2	22.01.5040	Mutter M4
			Nut M4
			Gleichrichter-Grundplatte (nicht Ersatzteil)
			Rectifier mounting base (not spare part)
	2	21.53.0454	Schraube Z IS M4x6
			Screw Z IS M4x6
	2	24.16.1040	Sicherungsscheibe D 4.3/7
			Lock washer D 4.3/7
14	3	59.26.7103	Elektrolyt-Kondensator 10 mF/63 V (10'000 uF)
			Electrolytic capacitor 10 mF/63 V (10.000 uF)
	3	59.20.0109	Isoliernutmutter
			Insulating cap nut
	3	59.20.0107	Isolierscheibe
			Insulating washer
	3	59.20.0108	Isolierscheibe
			Insulating washer

8.12
ANSCHLUESSE
CONNECTOR PANELS

POS	QTY	ORDER NUMBER	BEZEICHNUNG / PART NAME
	1	**1.810.001.01**	**Blindplatte "AUDIO/TC" (1 Einheit)**
			Dummy plate "AUDIO/TC" (1 unit)
	2	1.010.007.21	Schraube LIN IS M4x8
			Screw LIN IS M4x8
	1	**1.810.001.03**	**Blindplatte "CONSOLE" (2 Einheiten)**
			Dummy plate "CONSOLE" (2 units)
	4	1.010.007.21	Schraube LIN IS M4x8
			Screw LIN IS M4x8
	3	**1.810.195.00**	**Audio/TC-Anschlussplatte "XLR" kompl. ohne Etikette**
			Audio/TC connector plate "XLR" compl. without label
	6	1.010.007.21	Schraube LIN IS M4x8
			Screw LIN IS M4x8
	3	1.820.749.00	Anschlussprint
			Connector board
	3	20.25.0103	Kerbschraube KS 2,2x6,5
			Screw KS 2.2x6.5, self-tapping
	3	54.21.2001	XLR-Stecker J, 3 polig
			XLR connector J, 3 pin
	3	54.21.2002	XLR-Stecker P, 3 polig
			XLR connector P, 3 pin
	12	21.27.3354	Schraube LS KS M3x5
			Screw LS KS M3x5
	3	**1.810.196.00**	**Audio/TC-Anschlussplatte "LEMO"kompl. ohne Etikette**
			Audio/TC connector plate "LEMO"compl. without label
	6	1.010.007.21	Schraube LIN IS M4x8
			Screw LIN IS M4x8
	1	**1.810.190.00**	**Anschlussplatte "CONSOLE/VU-PANEL" kompl.**
			mit Kabelbaum intern fuer VU-Panel und Etikette
			Connector plate "CONSOLE/VU-PANEL" kompl.
			with internal rack-box wiring and label
	4	1.010.007.21	Schraube LIN IS M4x8
			Screw LIN IS M4x8
	1	1.810.741.00	Kabelbund "CONSOLE/VU-PANEL" (Digital)
			Wire harness "CONSOLE/VU-PANEL" (digital)
	1	1.810.742.00	Kabelbund "CONSOLE/VU-PANEL" (Audio)
			Wire harness "CONSOLE/VU-PANEL" (audio)
	1	**1.810.738.00**	**Anschlussplatte "REMOTE" (parallel) kompl.**
			Connector plate "REMOTE" (parallel) compl.
	4	1.010.007.21	Schraube LIN IS M4x8
			Screw LIN IS M4x8
	1	54.02.0442	D-Stecker J, 25 polig
			Connector, D-type, 25 pin
	1	1.810.001.04	Anschlussleiste (Fernsteuerung)
			Contact strip (remote control)
	1	**1.810.070.00**	**Serielle Fernsteuerung kompl. (Option)**
			Serial remote control compl. (optional)
	1	1.810.740.00	Kabelbund (Flachkabel) zu serieller Fernsteuerung
			Wire harness (flat cable) to serial remote control
	1	54.13.5002	D-Stecker J, 9 polig
			Connector D-type, 9 pin
	1	1.810.739.00	Adressprint oder
			Address board or
	1	**1.810.140.00**	**Monitor kompl. (intern)**
			Monitor compl. (internal)
	2	21.53.2354	Schraube S IS M3X6
			Screw S IS M3X6
	1	71.01.0108	Lautsprecher 15 Ohm / 2 W
			Loudspeaker 15 ohms / 2 W
	1	1.810.722.81	Monitor-Verstaerker
			Monitor amplifier
	2	21.53.0354	Schraube Z IS M3X6
			Screw Z IS M3X6

8.13
PANEL INTERN/EXTERN
PANEL INTERNAL/EXTERNAL

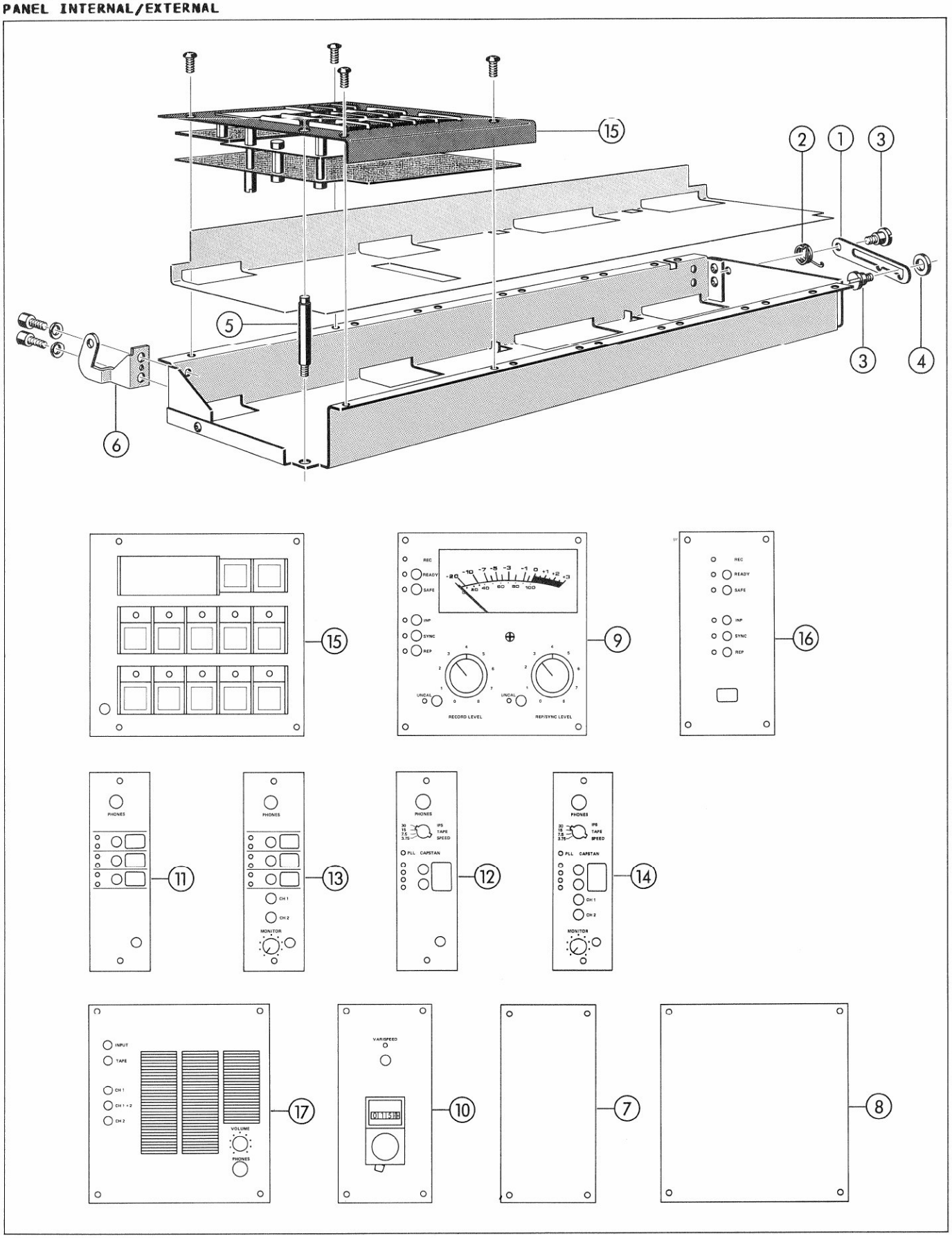

8.13
PANEL INTERN/EXTERN
PANEL INTERNAL/EXTERNAL

POS	QTY	ORDER NUMBER	BEZEICHNUNG / PART NAME
01	1	1.810.090.34	Stuetze Support
02	1	1.810.090.36	Drehfeder Turn-spring
03	3	1.010.019.21	Ansatzschraube M3x9 Spec. screw M3x9
04	2	1.810.090.35	Unterlagscheibe spez., D 4,3/8/2 Washer special, D 4.3/8/2
05	2	1.810.090.35	Spezialschraube IS Special screw IS
06	1	1.810.090.19	Scharnier links Left-hand hinge
	1	1.810.090.20	Scharnier rechts right-hand hinge
07		**1.810.002.04**	**Blindplatte, 1 Modul** **Dummy plate, 1 module**
	2	1.010.025.21	Schraube LIN IS M3x6 Screw LIN IS M3x6
08		**1.810.002.03**	**Blindplatte, 2 Module** **Dummy plate, 2 modules**
	4	1.010.025.21	Schraube LIN IS M3x6 Screw LIN IS M3x6
09		**1.810.320.81**	**VU-Panel** **VU panel**
	4	1.010.025.21	Schraube LIN IS M3x6 Screw LIN IS M3x6
	1	1.810.321.81	Frontplatte VU-Panel Front cover VU panel
	2	42.01.0150	Drehknopf Alu. D6,35 Knob alu. D6.35
	2	42.01.0151	Abschlussdeckel Knob cover
	2	1.810.320.09	Anzeigescheibe Indicator ring
	2	1.810.320.08	Bremsring Retaining ring
	2	37.02.0210	Tellerfeder Spring washer
	1	1.810.320.02	Druckknopf, lang, dunkelgrau Push button, long, dark grey
	1	1.810.320.03	Druckknopf, lang, blau Push button, long, blue
	1	1.810.320.04	Druckknopf, lang, gelb Push button, long, yellow
	1	1.810.320.05	Druckknopf, lang, weiss Push button, long, white
	1	1.810.320.06	Druckknopf, lang, gruen Push button, long, green
	1	1.810.320.07	Druckknopf, lang, rot Push button, long, red
	1	1.810.320.22	VU-Meter VU-meter
		10.302.001.06	Ersatzglas fuer VU-Meter Replacement glass for VU-meter
	1	1.820.730.81	VU-Meter-Verstaerker VU-meter amplifier
	1	51.02.0144	Lampe 6 V / 30 mA zu VU-Meter Bulb 6 V / 30 mA to VU-meter
	1	1.820.731.00	Einstell-Print Calibration board
	2	1.820.731.01	Tastenschalter Push button switch
		1.820.732.00	Kanalsteuerung Channel control board
	1	1.820.732.01	Tastenschalter(Kanalselector) Push button switch(Channel selector)

POS	QTY	ORDER NUMBER	BEZEICHNUNG / PART NAME
10		**1.810.330.82**	**Vari-Speed-Panel**
			Vari-speed panel
	2	1.010.025.21	Schraube LIN IS M3x6
			Screw LIN IS M3x6
	1	1.810.331.81	Frontplatte Vari-Speed
			Front panel Vari-speed
	1	1.810.762.00	Vari-Speed Steuer-Print
			Vari-speed control board
	1	58.99.0116	Feintrieb mit Ableseskala
			Fine drive with reading scale
11		**1.810.310.81**	**Master-Panel, 2 Geschw. (fuer Konsolenversionen)**
			Master panel, 2 speeds (for console versions)
	2	1.010.025.21	Schraube LIN IS M3x6
			Screw LIN IS M3x6
	1	1.810.311.81	Frontplatte Master-Panel, 2 Geschwindigkeiten
			Front cover master panel, 2 speeds
	1	1.810.732.00	Schalter-Print, 2 Geschwindigkeiten
			Master switching board, 2 speeds
	1	1.810.733.00	Steuer-Print, 2 Geschwindigkeiten
			Master control board, 2 speeds
	3	1.810.310.03	Druckknopf, kurz, dunkelgrau
			Push button, short, dark grey
12		**1.810.312.00**	**Master-Panel, 3 Geschwindigkeiten (fuer Konsolen-versionen)**
			Master panel, 3 speeds (for console versions)
			wie 1.810.310.81 ausser
			like 1.810.310.81 except
	1	1.810.313.00	Frontplatte Master-Panel, 3 Geschwindigkeiten
			Front cover master panel, 3 speeds
	1	1.810.764.00	Schalter-Print, 3/4 Geschwindigkeiten
			Master switching board, 3/4 speeds
	1	1.810.765.00	Steuer-Print, 3/4 Geschwindigkeiten
			Master control board, 3/4 speeds
	1	42.01.0228	Knebelknopf, grau
			Wing knob, grey
	1	42.01.0251	Deckel, grau, zu Drehknopf grau
			Cover, grey, to grey knob
	1	1.011.099.01	Drehschalter, auf 3 Positionen begrenzt
			Rotary switch, limited to 3 positions
12		**1.810.305.00**	**Master-Panel, 4 Geschwindigkeiten (fuer Konsolen-versionen)**
			Master panel, 4 speeds (for console versions)
			wie 1.810.312.00 ausser
			like 1.810.312.00 except
	1	1.810.306.00	Frontplatte Master-Panel, 4 Geschwindigkeiten
			Front cover master panel, 4 speeds
	1	1.011.099.01	Drehschalter, auf 4 Positionen begrenzt
			Rotary switch, limited to 4 positions
13		**1.810.315.81**	**Master- & Monitor-Panel, 2 Geschwindigkeiten (fuer Chassis- und portable Versionen)**
			Master & monitor panel, 2 speeds (for chassis and portable versions)
			wie 1.810.310.81 ausser
			like 1.810.310.81 except
	1	1.810.316.81	Frontplatte Master- & Monitor-Panel, 2 Geschw.
			Front cover master & monitor panel, 2 speeds
	1	58.99.0137	Potentiometer
			Potentiometer
	1	42.01.0200	Drehknopf, grau
			Knob, grey
	1	42.01.0251	Deckel, grau, zu Drehknopf grau
			Cover, grey, to grey knob
	2	1.810.320.02	Druckknopf, lang, dunkelgrau
			Push button, long, dark grey

POS	QTY	ORDER NUMBER	BEZEICHNUNG / PART NAME
14		**1.810.317.00**	**Master- & Monitor-Panel, 3 Geschwindigkeiten (fuer Chassis- und portable Versionen)**
			Master & monitor panel, 3 speeds (for chassis and portable versions)
			wie 1.810.312.00 ausser
			like 1.810.312.00 except
	1	1.810.318.00	Frontplatte Master- & Monitor-Panel, 3 Geschw.
			Front cover master & monitor panel, 3 speeds
	1	58.99.0137	Potentiometer
			Potentiometer
	1	42.01.0200	Drehknopf, grau
			Knob, grey
	2	42.01.0251	Deckel, grau, zu Drehknopf grau
			Cover, grey, to grey knob
	2	1.810.320.02	Druckknopf, lang, dunkelgrau
			Push button, long, dark grey
14		**1.810.307.00**	**Master- & Monitor-Panel, 4 Geschwindigkeiten (fuer Chassis- und portable Versionen)**
			Master & monitor panel, 4 speeds (for chassis and portable versions)
			wie 1.810.305.00 ausser
			like 1.810.305.00 except
	1	1.810.308.00	Frontplatte Master- & Monitor-Panel, 4 Geschw.
			Front cover master & monitor panel, 4 speeds
	1	58.99.0137	Potentiometer
			Potentiometer
	1	42.01.0200	Drehknopf, grau
			Knob, grey
	2	42.01.0251	Deckel, grau, zu Drehknopf grau
			Cover, grey, to grey knob
	2	1.810.320.02	Druckknopf, lang, dunkelgrau
			Push button, long, dark grey
15		**1.810.300.00**	**Steuer-Einheit (LCD)**
			Command unit (LCD)
		1.810.303.00	**Steuer-Einheit (LED)**
			Command unit (LED)
	4	1.010.025.21	Schraube LIN IS M3x6
			Screw LIN IS M3x6
	1	1.810.301.81	Frontplatte Steuer-Einheit
			Front cover command unit
	2	1.810.302.00	5er-Tasten-Gehaeuse, kompl.
			Fivefold push button housing, compl.
	1	1.810.252.00	Display- und 2er-Tasten-Gehaeuse, kompl. (LCD)
			Display and twofold push b. housing, compl. (LCD)
	1	1.810.253.00	Display- und 2er-Tasten-Gehaeuse, kompl. (LED)
			Display and twofold push b. housing, compl. (LED)
	1	1.810.300.02	Anzeigefenster klar, fuer LCD-Anzeige
			Display window clear, for LCD-Display
	1	1.810.303.02	Filterscheibe rot, fuer LED-Anzeige
			Filter screen red, for LED-Display
	1	1.810.768.00	Anzeigeeinheit (LED) (ESE!)
			Display board (LED) (ESE!)
	1	1.810.736.00	Anzeigeeinheit (LCD) (ESE!)
			Display board (LCD) (ESE!)
	1	1.810.767.00	Steuer-Print kompl. (LED oder LCD) (ESE!)
			Command board compl. (LED or LCD) (ESE!)
	1	1.810.735.00	LED-Treiber (programmierbare Funktionen)
			LED driver (extended functions)
	1	1.810.737.00	LED-Treiber (Grundfunktionen)
			LED driver (basic functions)
	12	55.03.0260	Impulstaste (Hall-Effekt,LCD)
			Command key (Hall effect,LCD)
	12	55.03.0261	Impulstaste (Hall-Effekt,LED)
			Command key (Hall effect,LED)
	12	55.03.0262	Zwischenstueck (zu Impulstaste,LED)
			Adapter piece (to command key,LED)
	2	1.810.300.07	Mutterbolzen spez. 31 mm
			Nut bolt spec. 31 mm

POS	QTY	ORDER NUMBER	BEZEICHNUNG / PART NAME
16		**1.810.335.81**	**Kanalsteuerung ohne Schilder** **Channel control without designation plates**
	2	1.010.025.21	Schraube LIN IS M3x6 Screw LIN IS M3x6
	1	1.810.336.81	Frontplatte Kanalsteuerung Front cover channel control
	1	1.810.320.02	Druckknopf, lang, dunkelgrau Push button, long, dark grey
	1	1.810.320.03	Druckknopf, lang, blau Push button, long, blue
	1	1.810.320.04	Druckknopf, lang, gelb Push button, long, yellow
	1	1.810.320.05	Druckknopf, lang, weiss Push button, long, white
	1	1.810.320.06	Druckknopf, lang, gruen Push button, long, green
17		**1.810.345.81**	**Monitoreinheit, extern** **Monitor unit, external**
	4	1.010.025.21	Schraube LIN IS M3x6 Screw LIN IS M3x6
	1	1.810.346.81	Frontplatte Monitoreinheit extern Front cover external monitor unit
	1	58.03.1103	Potentiometer Potentiometer
		42.01.0200	Drehknopf, grau Knob, grey
		42.01.0251	Deckel, grau, zu Drehknopf grau Cover, grey, to grey knob
	1	54.24.0102	Kopfhoererbuchse (6,3 mm Jack) Phones socket (Jack 6.3 mm)
	3	1.810.320.02	Druckknopf, lang, dunkelgrau Push button, long, dark grey
	1	1.810.320.03	Druckknopf, lang, blau Push button, long, blue
	1	1.810.320.05	Druckknopf, lang, weiss Push button, long, white
	1	1.810.721.82	Monitor-Print Monitor unit board
		1.810.763.00	**Steuereinheit fuer Geraeuschvermindungssystem** **Noise reduction system control (NRS)**
		1.810.720.00	**Verteilprint fuer 19" Rack** **Distribution board for 19" rack box**
		1.810.390.00	**19" Rack-Gehaeuse** **19" rack box**
		42.01.0111	**Abschlussdeckel zur Abdeckung des Lochs der Kanal-steuer-Tasten oder Masterpanel-Tasten bei Nichtge-brauch einer Taste.** **Cover cap to cover hole of Channel selector or Master panel, if a push button is not used.**
		42.01.0115	Abschlussdeckel, schwarz Cover cap, black
		42.01.0116	Abschlussdeckel, rot Cover cap, red
		42.01.0117	Abschlussdeckel, gelb Cover cap, yellow
		42.01.0118	Abschlussdeckel, blau Cover cap, blue
		42.01.0119	Abschlussdeckel, gruen Cover cap, green

8.14
SCHILDER
DESIGNATION PLATES

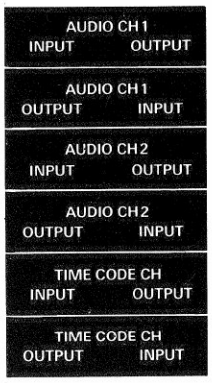

1.810.090.47
Anschlussaufkleber
Connection designation plates, self-adhesive

1.810.190.01
Anschlussaufkleber
Connection designation plate, self-adhesive

1.810.738.02
Anschlussaufkleber
Connection designation plate, self-adhesive

1.810.763.02
Anschlussaufkleber
Connection designation plate, self-adhesive

1.010.023.43
Schild "Schutzerdung"
Designation plate "protective ground"

1.810.210.11
Sicherungsschild, Netzteil
Fuse designation plate, power supply

1.810.210.13
Sicherungsschild, Spannungswaehler
Fuse designation plate, line voltage selector

1.810.310.02
Schildersatz, Master Modul
Set of designation plates, master module

1.810.310.04
Schildersatz, Master Modul spez. Geschwindigkeiten
Set of designation plates, master module spec. speed

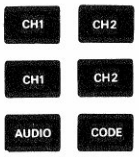

1.810.335.01
Schildersatz, Kanalsteuerung
Set of designation plates, channel control

1.011.210.02
Schild, Steuer-Einheit (<)/(>){Umspulen}
Designation plate, command unit (<)/(>){Fast wind}

1.011.210.03
Schild, Steuer-Einheit (PLAY)
Designation plate, command unit (PLAY)

1.011.210.04
Schild, Steuer-Einheit (STOP)
Designation plate, command unit (STOP)

1.011.210.05
Schild, Steuer-Einheit (REC)
Designation plate, command unit (REC)

RECAP

1.011.210.06
Schild, Steuer-Einheit (RECAP)
Designation plate, command unit (RECAP)

LIFTER

1.011.210.07
Schild, Steuer-Einheit (LIFTER)
Designation plate, command unit (LIFTER)

LOC START

1.011.210.08
Schild, Steuer-Einheit (LOC START)
Designation plate, command unit (LOC START)

FADER

1.011.210.09
Schild, Steuer-Einheit (FADER)
Designation plate, command unit (FADER)

VARI SPEED

1.011.210.10
Schild, Steuer-Einheit (VARISPEED)
Designation plate, command unit (VARISPEED)

REM CONTR

1.011.210.11
Schild, Steuer-Einheit (REM. CONTR.)
Designation plate, command unit (REM. CONTR.)

CODE READY

1.011.210.12
Schild, Steuer-Einheit (CODE READY)
Designation plate, command unit (CODE READY)

TAPE DUMP

1.011.210.13
Schild, Steuer-Einheit (TAPE DUMP)
Designation plate, command unit (TAPE DUMP)

RESET TIMER

1.011.210.14
Schild, Steuer-Einheit (RESET TIMER)
Designation plate, command unit (RESET TIMER)

ZERO LOC

1.011.210.15
Schild, Steuer-Einheit (ZERO LOC)
Designation plate, command unit (ZERO LOC)

TRANS ◁ REDUCED ▷

1.011.210.16
Schild, Steuer-Einheit (TRANS/REDUCED)
Designation plate, command unit (TRANS/REDUCED)

LOC 1

1.011.210.17
Schild, Steuer-Einheit (LOC 1)
Designation plate, command unit (LOC 1)

LOC 2

1.011.210.18
Schild, Steuer-Einheit (LOC 2)
Designation plate, command unit (LOC 2)

LOC 3

1.011.210.19
Schild, Steuer-Einheit (LOC 3)
Designation plate, command unit (LOC 3)

LOC 4

1.011.210.20
Schild, Steuer-Einheit (LOC 4)
Designation plate, command unit (LOC 4)

1.810.090.48 Programmtabelle (links)
Programming table (left hand side)
1.810.090.59 Programmtabelle (rechts)
Programming table (right hand side)

BEFORE REMOVING OR INSERTING CARDS, MACHINE MUST BE SWITCHED OFF MINIMUM 5 SEC																
LOGIC SECTION					TIME CODE CH		AUDIO CH 1				M/S SWITCH	AUDIO CH 2			
MP UNIT	TD CONTR.	SERIAL B CONTR.	PERIPHERY CONTR.	BUS CONV.	READ/WR AMP.	DELAY UNIT	HF - DRIVER	RECORD AMP.	REPROD AMP.	LINE AMP.	TEST GEN.	HF - DRIVER	RECORD AMP.	REPROD AMP.	LINE AMP.

1.810.090.46
Beschriftung zu Verstaerkerkorb
Designation plate for amplifier rack

8.15
KABELBUENDE
WIRE HARNESSES

POS	QTY	ORDER NUMBER	BEZEICHNUNG / PART NAME
		1.810.702.00	Kabelbund Kopftraeger-Anschluss Wire harness headblock connection
		1.810.703.00	Kabelbund Linien-Anschluss Wire harness line connection
		1.810.704.00	Kabelbund Laufwerk Wire harness tape transport
		1.820.734.00	Kabelbund VU-Meter-Panel Wire harness VU meter panel
		1.810.743.00	Flachkabel 40 polig, 100 mm (Eingabeteil fuer Audio-parameter) Flat cable 40 wires, 100 mm (Audio parameter key-board)
		1.810.744.00	Flachkabel 16 polig, 800 mm (Tonmotorsteuerung, Bandzugwaage rechts) Flat cable 16 wires, 800 mm (Capstan control, right hand tape tension sensor)
		1.810.745.00	Flachkabel 16 polig, 400 mm (Wickelmotorsteuerung, Bandzugw. links, Vari-Speed-Panel, ext. Monitor) Flat cable 16 wires, 400 mm (Spooling motor control, left hand tape tension sensor, vari-speed panel, external monitor panel)
		1.810.746.00	Flachkabel 26 polig, 800 mm (Parallele Fernst.) Flat cable 26 wires, 800 mm (Par. remote control)
		1.810.747.00	Flachkabel 40 polig, 400 mm (Steuereinheit) Flat cable 40 wires, 400 mm (Command unit)
		1.820.733.00	Flachkabel 16 polig, 1000 mm (Kanalsteuerung, Master Panel 2/3/4 Geschw., VU-Meter-Panel) Flat cable 16 wires, 1000 mm (Channel control, master panel 2/3/4 speeds, VU meter panel)

9. ANHANG / APPENDIX / ANNEXE

SI (Service Information) No. 95/86	(A810 Software Version 40/85)
SI (Service Information) No. 99/86	(A810 Software Version 25/86)
SI (Service Information) No. 116/88	(A810 Software Version 01/88)

SI 95 / 86 D/E
A810 Software 4085

Einleitung

Die Software 40/85 für die A810 ist erhältlich.
Diese neue Software bietet einen erweiterten Bedienungskomfort, ebenso wurden einige Mängel der Software 13/83 behoben.

Introduction:

The software 40/85 is now available. This software offers an improved operating comfort. Some shortcomings of the software 13/83 are also removed.

Wichtig. für TLS 4000 Benützer

Wird die A810 mit der neuen Software 4085 in einem Synchronisationskomplex mit dem STUDER Synchronisator TLS 4000 betrieben, so muss auch auf dem Interface Print 1.812.120 die Software (alt R5491-2) durch R5491-3 ersetzt werden.

Important. for users of the TLS 4000

When using the A810 with the new Software 4085 in a synchronizer system together with the STUDER synchronizer TLS 4000, the old software (R5491-2) of the interface PCB 1.812.120 must be replaced by R5491-3.

Achtung:

Bei Pilot-Ausführung der A810 funktioniert die automatische Umschaltung Bandsorte A / Bandsorte B beim Kopfträgeraustausch mit der Software 40/85 nicht mehr.
Es wird eine neue spezielle Software für die A810 Pilotversion erhältlich sein.

Please note:

The automatic changeover from tape sort A to tape sort B by exchanging the headblock of the A810 pilot versions, does not function anymore with software 40/85.
A new special software for all A810 pilot versions will be released.

Wichtig:

Alle A810 Tonbandgeräte, die mit der Mikroprozessor-Karte 1.820.780 bestückt sind, können mit dieser Software bestückt werden. Hardware Aenderungen müssen keine ausgeführt werden, es genügt, wenn die drei EPROMS ersetzt werden.

Important:

All A810 tape recorders equipped with the microprocessor PCB 1.820.780 allow the use of the new software. There are no hardware modifications necessary - just replace the three EPROM's only.

Umrüstarbeiten:

Es müssen nur die EPROM's ersetzt werden. Dadurch erhält die MPU Karte eine neue Bezeichung: 1.810.780.20 (Hardware -20).EPROM R5212-0 wird ersetzt durch R5212-1.
EPROM R5213-0 wird ersetzt durch R5213-1.
EPROM R5214-0 wird ersetzt durch R5214-1.

Modification instructions:

Replace the three EPROM's. With this change, the MPU-PCB receives a new designation: 1.810.780.20 (Hardware - 20). Replace EPROM R5212-0 by R5212-1.
Replace EPROM R5213-0 by R5213-1.
Replace EPROM R5214-0 by R5214-1.

Wichtig:

Beim Austausch können die Audio-Daten verloren gehen. Daher nach Möglichkeit Daten auf Band abspeichern. Ebenso kann der RAM-interne Betriebsstundenzähler rückgesetzt werden.

Important:

Care must be taken that the Audio - parameters do not get lost when exchanging the EPROM's. Therefore, store the parameters on tape. The RAM-internal elapsed time counter may also get reset to zero.

Softwarebereinigung:

Unter anderem wurden folgende Mängel der Software 1383 behoben:

- Während der Faderstart Funktion wird die A810 beim Bandausfädeln nicht mehr blockiert.
- Bei Geräten mit LED Display können die auf Band abgespeicherten Audioparameter wieder mit dem RAM-Inhalt verglichen werden.
- Verschiedene unzulängliche Mute-Funktionen wurden bereinigt.
- Drop-in / Drop-out Zeiten wurden korrigiert.

Software modifications:

The following shortcomings of the software 1383 have been removed:

- If the tape runs out during faderstart operation, the tape transport does not block anymore.
- On tape recorders equipped with LED-Display it is possible to verify the audio parameters stored on tape with the contents of the RAM again.
- Various mute functions have been corrected.
- Drop in / Drop out times have been corrected.

Bedienungsänderungen und neue Funktionen der Software 4085 :

1. Falls beim Einschalten des Gerätes kein Band aufgelegt ist, blinkt die LED der Stop-Taste für ca. 10 Sekunden, nachher erlischt sie. Beim Drücken der STOP-Taste beginnt die LED erneut für ca. 10 Sekunden zu blinken.

   LED für Stop:

   dunkel oder blinkt = Kein Band eingelegt oder Bandende

   permanent hell = Band eingelegt ohne Schlaufe

Operating changes and new functions of the software 4085:

1. If in power on mode no tape is loaded, the LED of the STOP button flashes for approx. 10 seconds, afterwards it extinguishes. When pressing the STOP button, the LED flashes again for approx. 10 sec.

   LED for STOP:

   extinguished or flashing = tape out or tape end

   permanently turned on = tape threaded and tension arms in operating position.

2. Der Aufnahme Befehl wird vom Laufwerk nicht akzeptiert, wenn alle safe / ready Schalter auf Position SAFE stehen. (Die rote LED über der Laufwerkfunktionstaste REC leuchtet nicht, analog zu A820).

3. Umschalten der Bandgeschwindigkeit während der Aufnahme setzt die A810 in STOP und der Kanalselektor bleibt auf READY Position.

4. Während der Parkierphase des Zero- oder Adresslocators, kann der Aufnahmebefehl vorgewählt werden. Falls kein Kanalselektor auf READY steht, wird nach der Parkierphase der Record Befehl aufgehoben und das Laufwerk startet in Wiedergabe.

5. Die Funktionstasten am Masterpanel (CCIR/NAB, TAPE A / TAPE B oder MONO/STEREO-Umschaltung) sind gegen unbeabsichtigtes Betätigen gesichert worden.

   Die Umschaltung erfolgt nur durch Drücken der STOP-Taste und gleichzeitiges Betätigen der entsprechenden Umschalttaste am Masterpanel.

6. Im reduziertem Wickelgeschwindigkeitsmodus sind die LOC-Tasten für die Locate Funktion gesperrt. Beim Drücken der LOC-Tasten wird lediglich der Zählerstand abgespeichert.

7. Band einziehen nach dem Schneiden:

   Sind beide Bandsensoren in Ruheposition, kann das Band durch Drücken der Tasten > oder < auf den entsprechenden Spulenteller eingezogen werden.

2. The tape transport does not accept the record command anymore when all safe / ready switches are in position SAFE. (The red LED above the REC-button of the command unit does not light up anymore, similar to A820).

3. While the A810 is in record mode, a speed change causes the machine to STOP and the channel selector remains in ready mode.

4. During the parking mode of the zero- or address locator, it is possible to preselect the record command. If none of the channel selectors is in ready mode, the record command gets canncelled as soon as the tape transport has reached the parking point and the machine starts in play mode.

5. The push button of the masterpanel (CCIR/NAB, TAPE A / TAPE B or MONO/STEREO-switches) have been protected against unintentional operation.

   Any changeover occurs only when pressing the STOP button and pressing additionally the required push button of the master panel.

6. The LOC-push buttons are disabled for the locate function during the reduced wind mode.
   When pressing any address LOC push button, only the counter position will be stored.

7. Pull up the tape after cutting:

   It is possible to pull up (wind) the tape on to the corresponding tape reel when pressing the push button > or < if both tape tension sensors are in restposition.

Band über die linke oder rechte Umlenkrolle führen (je nach Einzugrichtung), sodass Kopfkontakt besteht.(Siehe Bild.)
Die Einzugsgeschwindigkeit kann durch den Fingerdruck auf das Band kontrolliert werden.

Guide the tape over the left or right hand guide roller (depending on the pull up direction) so that it remains in contact with the heads. (See drawing).
The speed of the pull up mode can be controlled by finger pressure on the tape.

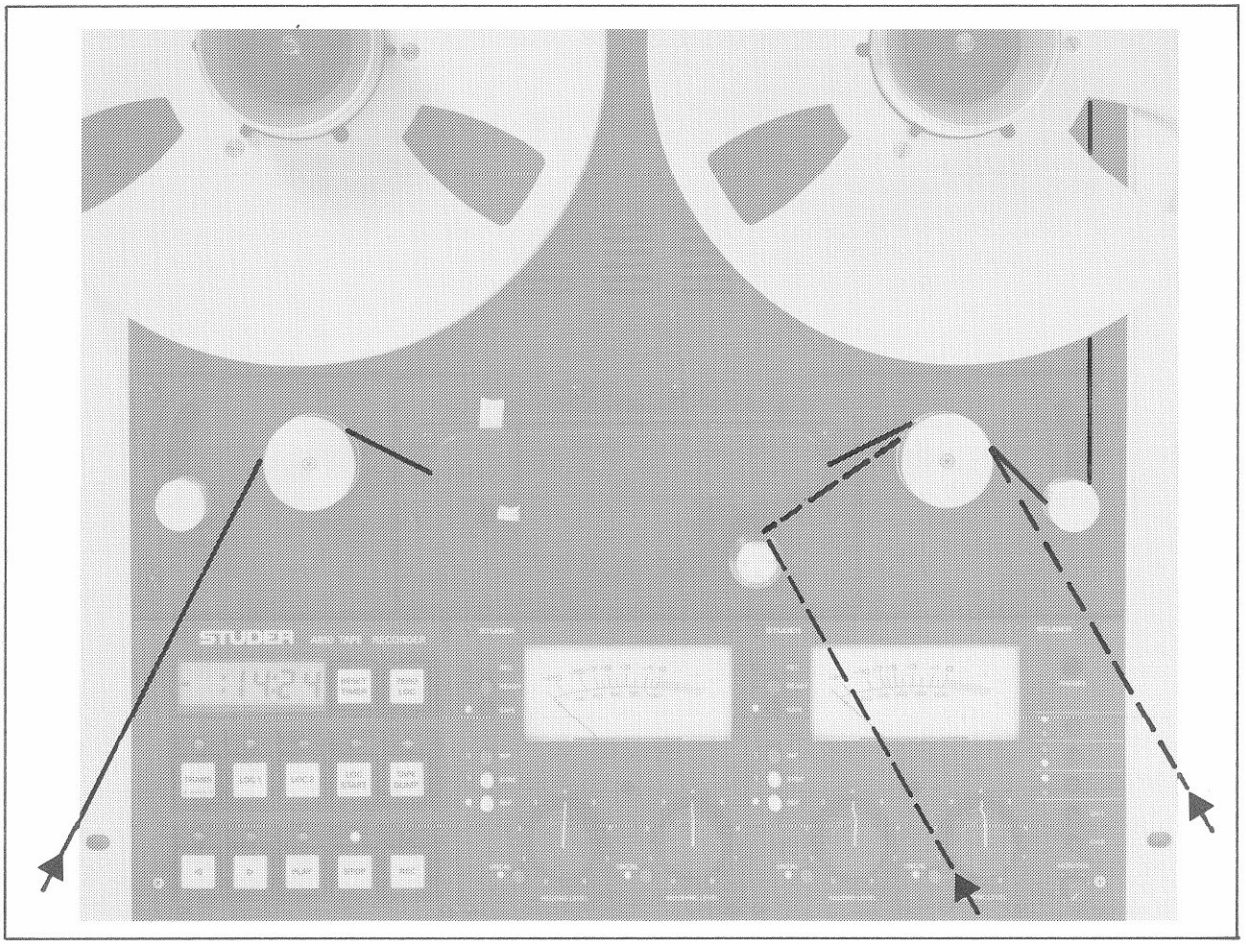

8. Bei Zeitcode Geräten:

Beim Umschalten von einer beliebigen Geschwindigkeit auf 3 3/4 ips wird der Zeitcode-Kanal automatisch auf SAFE und auf INPUT umgeschaltet.
Beim Zurückschalten auf eine beliebige andere Geschwindigkeit wird der Zeitcode-Kanal auf SAFE belassen und nimmt den zuvor angewählten Status: REP, SYNC oder INPUT wieder an.

8. Time code tape recorders:

When changing from any speed to 3 3/4 ips, the time code channel changes automatically to SAFE and INPUT mode.

When changing back to any other speed, the time code channel remains in SAFE mode and the previous status returns: REP, SYNC or INPUT.

9. Zeitcode lesen:

Im Schnellwickel Modus wird der Zeitcode jetzt immer vom rechten Kopf gelesen und die Delay unit wird überbrückt, (by pass) unabhängig von der Wickelgeschwindigkeit.
Dadurch werden die Lifter beim Umtasten der Schnellwickelrichtung nicht mehr aktiviert.

10. Auf der Laufwerkfernsteuerung 1.328.200 kann die LOC 1 Taste als LOC-START-Taste oder zurück als LOC 1 Taste umprogrammiert werden.

Umprogrammieren der LOC 1 Taste auf LOC-START:

TRANS und LOC 1 Taste drücken und gleichzeitig noch die PLAY Taste drücken. Die LOC 1 Taste der Laufwerksteuerung ist somit LOC-START-Taste. Wird die Taste aktiviert, leuchtet auf der geräteinternen Bedieneinheit die LOC-START LED. (Funktion wird im RAM eingelesen somit bleibt sie auch nach dem Ausschalten des Gerätes erhalten.

Umprogrammieren von LOC-START zurück auf LOC 1:

TRANS und LOC-START-Tasten drücken und gleichzeitig STOP-Taste drücken. Somit ist die LOC-START Taste wieder LOC 1-Taste. Beim Aktivieren der LOC 1 Taste leuchtet auf der maschineninternen Bedieneinheit die LOC 1 LED.

11. Der Brückenstecker JS 1 auf dem Tape deck controller PCB 1.810.750 hat neu folgende Funktion:

Brückenstecker JS 1 eingesetzt oder in POS. A:

Falls eine Laufwerktaste auf TAPE DUMP (Papierkorbbetrieb) programmiert ist, wird beim Drücken der Taste TAPE DUMP sofort der Papierkorbbetrieb aktiviert.

9. Time code reading:

The time code reading in fast wind is no longer depending on the wind speed, i.e the time code will always be read by the right hand TC-head and the delay unit is by- passed.
For this reason the tape lifters are not moved anymore when changing wind direction.

10. On the tape transport remote control 1.328.200, the LOC 1 push button function can be changed into LOC-START and vica versa.

Programming of the LOC 1 push button to LOC-START:

Press TRANS and LOC 1 push buttons together and at the same time the PLAY-key. Now the LOC 1 push button activates the LOC-START function. When pressing this push button, the LOC-START LED of the internal command unit lights up. (The function is stored in the RAM, therefore, the function remains stored even after power off.

Programming the LOC-START function back to LOC 1:

Press TRANS and LOC-START push button together and in addition the STOP-push button. Now the LOC-START push button is again LOC 1. When pressing this push button the LOC 1 LED of the internal command unit lights up.

11. The jumper JS 1 on the tape deck controller PCB 1.810.750 has the following new function:

Jumper JS 1 inserted or in POS.A:

If one of the tape transport push buttons is programmed to TAPE DUMP, the tape dump function will be activated when pressing the TAPE DUMP key.

Brückenstecker JS 1 entfernt oder in POS. B:

Falls eine Laufwerktaste auf TAPE DUMP (Papierkorbbetrieb) programmiert ist, wird das Laufwerk für den Papierkorbbetrieb vorbereitet. Durch Drücken der Taste PLAY wird die Funktion Papierkorbbetrieb ausgeführt.

Jumper JS 1 removed or in POS. B:

If one of the tape transport push buttons is programmed to TAPE DUMP, the tape dump function will be preselected when pressing the TAPE DUMP key. When pressing the PLAY push button the tape dump function is on.

12. Der Brückenstecker JS 5 auf der Mikro-Prozessor PCB 1.820.780 erhält folgende Funktion.

Brückenstecker JS 5 eingesetzt:

Normal Betrieb

Brückenstecker JS 5 entfernt:

Das Audio Eingangssignal wird direkt auf den Ausgang geschaltet

Diese Funktion wird nur benötigt, um das Potentiometer auf dem Linienverstärker 1.820.714 oder 1.820.715 abzugleichen, wenn keine Kanalselektoren in der A810 eingebaut sind.

12. The jumper JS 5 on the micro processor PCB 1.820.780 has the following new function:

Jumper JS 5 inserted:

Normal operation

Jumper JS 5 removed:

The audio input signal switches directly to the output

This function is just used to align the pot. meter on the line amplifier PCB 1.820.714 or 1.820.715 if no channel selectors are installed in the A810.

13. Brückenstecker JS 1 auf der seriellen Schnittstelle 1.810.752.00:

Der Brückenstecker JS 1 kann jetzt auf Position "H" umgesteckt werden. Dadurch verliert der DIL-Schalter 2 auf der oberen DIL-Schalter Reihe seine Funktion.
Das Gerät erkennt somit selbstständig, ob die RS 232 Schnittstelle aktiviert werden soll, oder ob die Audioparameter auf Band abgespeichert werden sollen. Die Erkennung erfolgt softwaremässig anhand der gesetzten DIL-Schalterposition des Adressprints 1.810.739 und wird über das Busswitch-Signal (T-BUSSW) umgeschaltet.

13. Jumper JS 1 on the serial remote control PCB 1.810.752.00:

Now the jumper JS 1 can be put into POS. "H". Thereby, the DIL-switch 2 on the upper row becomes inactive.

The tape recorder recognizes independently whether the RS 232 port has to be enabled or if the audio parameter has to be stored on the tape. The recognition is activated by software according to the DIL-switch positions of the addressboard 1.810.739 and is switched with the busswitch signal (T-BUSSW).

14. Folgende neue Befehle sind über die RS 232 implementiert worden:

14. Following new RS 232 commands have been implemented:

SMA _xxxxxx-	Setzen der Maschinenadresse via RS 232 auf (xxxxxx) (6 Nummern HEX)	SMA _xxxxxx-	Set machine address to (xxxxxx) (6 digit HEX) via RS 232
MA? =	Abfragen der Maschinenadresse, welche oben gesetzt wurde.	MA? =	Request for the above set machine address
MAN =	Beide Kanäle stumm (mute) geschaltet.	MAN =	Mute for both channels
MAF =	Entriegelung der Stummschaltung (mute) beider Audiokanäle.	MAF =	Mute off for both channels

SI 99/86 D/E
A810 Software 25/86

Completition to Software 40/85
SI 95/86 D/E

Einleitung

Die Software 25/86 wurde ab Serie Nr.5001 eingesetzt und löst die Software 40/85 sowie 13/83 ab.

Die neue Software 25/86 wurde notwendig, da mit der Software 40/85 die automatische Umschaltung Bandsorte A / Bandsorte B bei der A810 Spezial-Ausführung "Pilotton" beim Kopfträger-Austausch nicht mehr funktionierte. Ebenso konnten einige Mängel der Software 40/85 behoben werden.

Introduction:

Software 25/86 is factory installed from serial no. 5001 onwards and replaces the software 40/85 as well as 13/83.

The new software became necessary because with software 40/85 the automatic changeover between Tape sort A and Tape sort B of the A810 Special Pilot-Version was not effective anymore when exchanging the headblock. Some shortcomings of the software 40/85 have also been eliminated.

Wichtig für TLS 4000 Benützer:

Wird die A810 mit der neuen Software 25/86 in einem Synchronisationskomplex mit dem STUDER Synchronisator TLS 4000 betrieben, so muss auch auf dem Interface Print 1.812.120 die Software (alt R5491-2 oder R5491-3) durch R5491-4 ersetzt werden.

Im Hinblick auf die Betriebssicherheit des Synchronisations-Systems, empfehlen wir allen TLS 4000 - Benützern die neue A810 - Maschinen-Software (25/86) zu verwenden.

Siehe auch Software-Kombinationstabelle.

Important for users of TLS 4000

When using the A810 with the new software 25/86 in a synchronizer system together with the STUDER synchronizer TLS 4000, the old software (R5491-2 or R5491-3) of the interface PCB 1.812.120 must be replaced by R5491-4.

To ensure reliable operation of the synchronizer-system we recommend to all TLS 4000 users to up-grade A810 Software to 25/86.

See also Software-Combination table.

Wichtig:

Alle A810 Tonbandgeräte, die mit der Mikroprozessor-Karte 1.820.780 oder 1.810.780.20 bestückt sind, können mit dieser Software bestückt werden.

Um bei dem Mikroprozessor-Print 1.820.780.81 oder 1.820.780.82 (MPU-Karte 1.820.780.12) sicher zu sein, dass der Mikroprozessor in allen Fällen richtig aufstartet, muss die MPU-reset Zeit auf 100ms verlängert werden.

Dazu muss der Kondensator C5(0,47µF) auf der Mikroprozessor-Karte 1.820.780.12 auf 10µF (59.26.2100) geändert werden (siehe Belegungsplan).

Important:

All A810 tape recorders equipped with the microprocessor PCB 1.820.780 or 1.810.780.20 allow the use of the new software.

To make sure that the microprocessor with the MPU PCB 1.820.780.81 and 1.820.780.82 (Layout 1.820.780.12) starts up smoothly in all cases, the MPU reset time must be lengthened to 100ms.

Therefore, capacitor C5 (0,47 µF) of the microprocessor board layout 1.820.780.12 has to be changed to 10 µF 59.26.2100 (see layout).

MPU-Prints mit der Bezeichnung 1.820.780.00 und 1.810.780.20 sind von dieser Aenderung nicht betroffen.

Sonst müssen keine Hardware Aenderungen ausgeführt werden, es genügt, wenn die drei EPROMS ersetzt werden.

This change is not required on MPU PCB's labelled 1.820.780.00 and 1.810.780.20.

No other hardware modifications are necessary - it is sufficient to replace the three EPROM's only.

Umrüstarbeiten:

Es müssen nur die EPROM's ersetzt werden. Dadurch erhält die MPU Karte eine neue Bezeichnung: 1.810.780.21 (Hardware -20).

EPROM R 5212-0 (13/83) oder IC 10 (40/85) 1.810.999.20 wird ersetzt durch IC 10 (25/86) 1.810.999.21.

EPROM R 5213-0 (13/83) oder IC 12 (40/85) 1.810.999.20 wird ersetzt durch IC 12 (25/86) 1.810.999.21.

EPROM R 5214-0 (13/83) oder IC 14 (40/85) 1.810.999.20 wird ersetzt durch IC 14 (25/86) 1.810.999.21.

Modification instructions:

Replace the three EPROM's. With this change, the MPU-PCB receives a new designation: 1.810.780.21 (Hardware - 20).

Replace EPROM R 5212-0 (13/83) or IC 10 (40/85) 1.810.999.20 by IC 10 (25/86) 1.810.999.21.

Replace EPROM R 5213-0 (13/83) or IC 12 (40/85) 1.810.999.20 by IC 12 (25/86) 1.810.999.21.

Replace EPROM R 5214-0 (13/83) or IC 14 (40/85) 1.810.999.20 by IC 14 (25/86) 1.810.999.21.

Wichtig:

Beim Austausch können die Audio-Daten verloren gehen. Daher nach Möglichkeit Daten auf Band abspeichern. Ebenso kann der RAM-interne Betriebsstundenzähler rückgesetzt werden.

Important:

Care must be taken that the Audio-parameters do not get lost when exchanging the EPROM's. Therefore, store the parameters on tape. The RAM-internal elapsed time counter may also be reset to zero.

Softwarebereinigung:

Unter anderem wurden folgende Mängel der Software 40/85 behoben:
- Der (Software) Betriebsstundenzähler ist nicht mehr flüchtig.
- Wird der Aufnahmebefehl während dem Bandauslauf permanent gedrückt, so bleiben die Audiokanäle in Stop nicht mehr auf Ready-Record hängen.

Software modifications:

The following shortcomings of the software 40/85 have been eliminated:
- The (software) elapsed counter content does not disappear anymore.
- If the record command is permanently pressed, even in the moment when the tape is running out of the tape transport, the audio channels do not remain in Ready-Record mode anymore after stop mode has been achieved.

Bedienungsänderungen und neue Funktionen der Software 25/86

Die Software 25/86 offeriert dieselben neuen Funktionen die bereits in der Software 40/85 implementiert sind.
Deshalb können die Bedienungsänderungen und die neuen Funktionen vollumfänglich der SI 95/86 entnommen werden.

Abweichend von SI 95/86 sind nur folgende zwei Punkte:

1) Seite 1 Mitte:

Achtung:

~~Bei Pilot-Ausführung der A810 funktioniert die automatische Umschaltung Bandsorte A / Bandsorte B beim Kopfträgeraustausch mit der Software 40/85 nicht mehr.
Es wird eine neue spezielle Software für die A810 Pilotversion erhältlich sein.~~

Dieser Abschnitt ist nicht mehr gültig.

2) Seite 3 § 5:

5. Die Funktionstasten am Masterpanel (CCIR/NAB, TAPE A / TAPE B oder MONO/STEREO-Umschaltung) sind gegen unbeabsichtigtes Betätigen gesichert worden.

   Die Umschaltung erfolgt nur durch Drücken der STOP-Taste und gleichzeitiges Betätigen der entsprechenden Umschalttaste am Masterpanel.

   Diese Funktion ist jetzt mit einem Jumper auf dem Masterpanel anwählbar.

Operating changes and new functions of software 25/86

Software 25/86 offers the same new features which are already implemented in software 40/85.
Therefore, all the operating changes and new function can be read in SI 95/86.

Differing from SI 95/86 are only the following two paragraphs:

1) Page 1 center:

Please note:

~~The automatic changeover from tape sort A to tape sort B by exchanging the headblock of the A810 pilot versions, does not function anymore with software 40/85.
A new special software for all A810 pilot versions will be released.~~

This paragraph is no longer valid.

2) Page 3 § 5:

5. The push button of the masterpanel CCIR/NAB, TAPE A / TAPE B or MONO/STEREO-switches) have been protected against unintentional operation.

   Changeover occurs only when pressing the STOP button while pressing simultaneously the required push button of the master panel.

   This function is now selectable by a jumper on the Masterpanel.

a) Masterpanel 1.810.310.00/81
(2 Geschwindigkeits-Version)

Der Jumper JS2 auf dem Master-Control PCB 1.810.733.00 hat neu folgende Funktion:

JS2 in POS A = Funktionstasten verriegelt mit Stop-Taste

JS2 in POS B = Funktionstasten direkt schaltbar

b) Masterpanel 1.810.312.00
(3 Speed)
Masterpanel 1.810.305.00
(4 Speed)

Der Jumper JS1 auf dem Master-Control PCB 1.810.765.00 hat neu folgende Funktion:

JS1 in POS A = Funktionstasten verriegelt mit Stop-Taste

JS1 in POS B = Funktionstasten direkt schaltbar

Wichtig:

Damit bei der A810 Pilot-Ausführung die automatische Umschaltung Tape A / Tape B möglich ist, muss der Jumper in Position B stehen.

MASTER CONTROL PCB 1.810.733–00

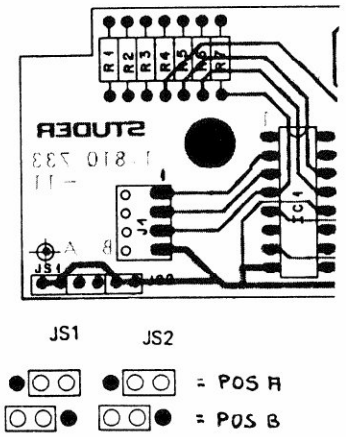

a) Masterpanel 1.810.310.00/81
(2 Speed-Version)

The jumper JS2 on the Master-Control PCB 1.810.733.00 has the following new function:

JS2 in POS A = Function change-over locked with Stop-Key

JS2 in POS B = Function change-over directly switchable

b) Masterpanel 1.810.312.00
(3 Speed)
Masterpanel 1.810.305.00
(4 Speed)

The jumper JS1 on the Master-control PCB 1.810.765.00 has now the following function:

JS1 in POS A = Function change-over locked with Stop-Key

JS1 in POS B = Function change-over direct switchable.

Important:

In order to make possible an automatic changeover from Tape A to Tape B in the A810 Pilot version (or vice versa) the jumper must be in position B.

MASTER CONTROL PCB 4 SPEED 1.810.765–00

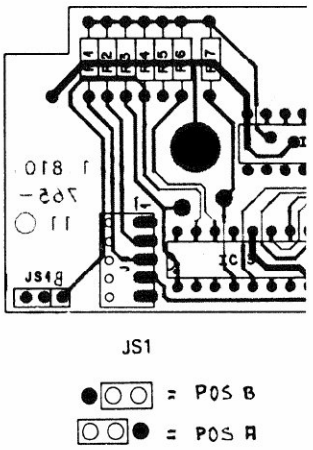

A810 Software matched to / Anpassung an TLS 4000

The different Software - conditions of the A810 require also different Software (SW) for the TLS 4000 Interface.

Mit den verschiedenen Software - Ständen der A810 werden auch verschiedene TLS 4000 Interface - Software (SW) notwendig.

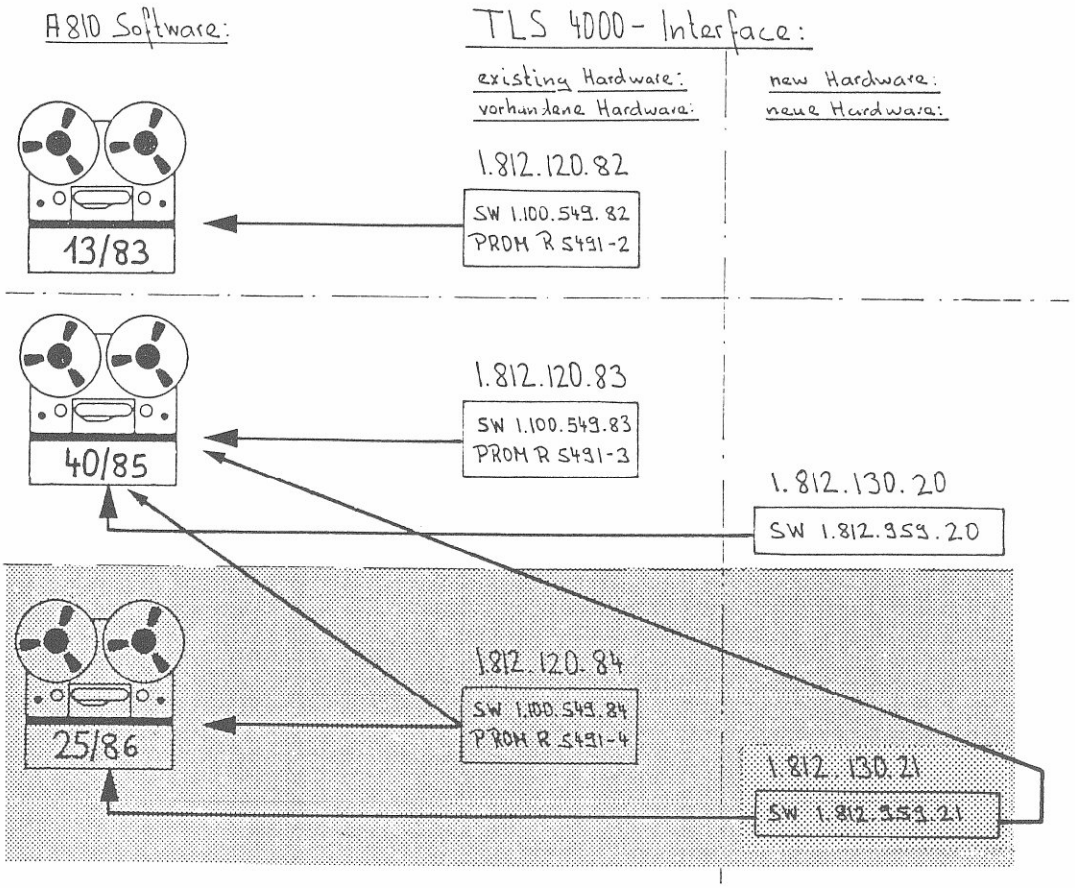

Legend:

— allowed Combination

Latest combination

Legende:

— mögliche Kombination

aktuelle Kombination

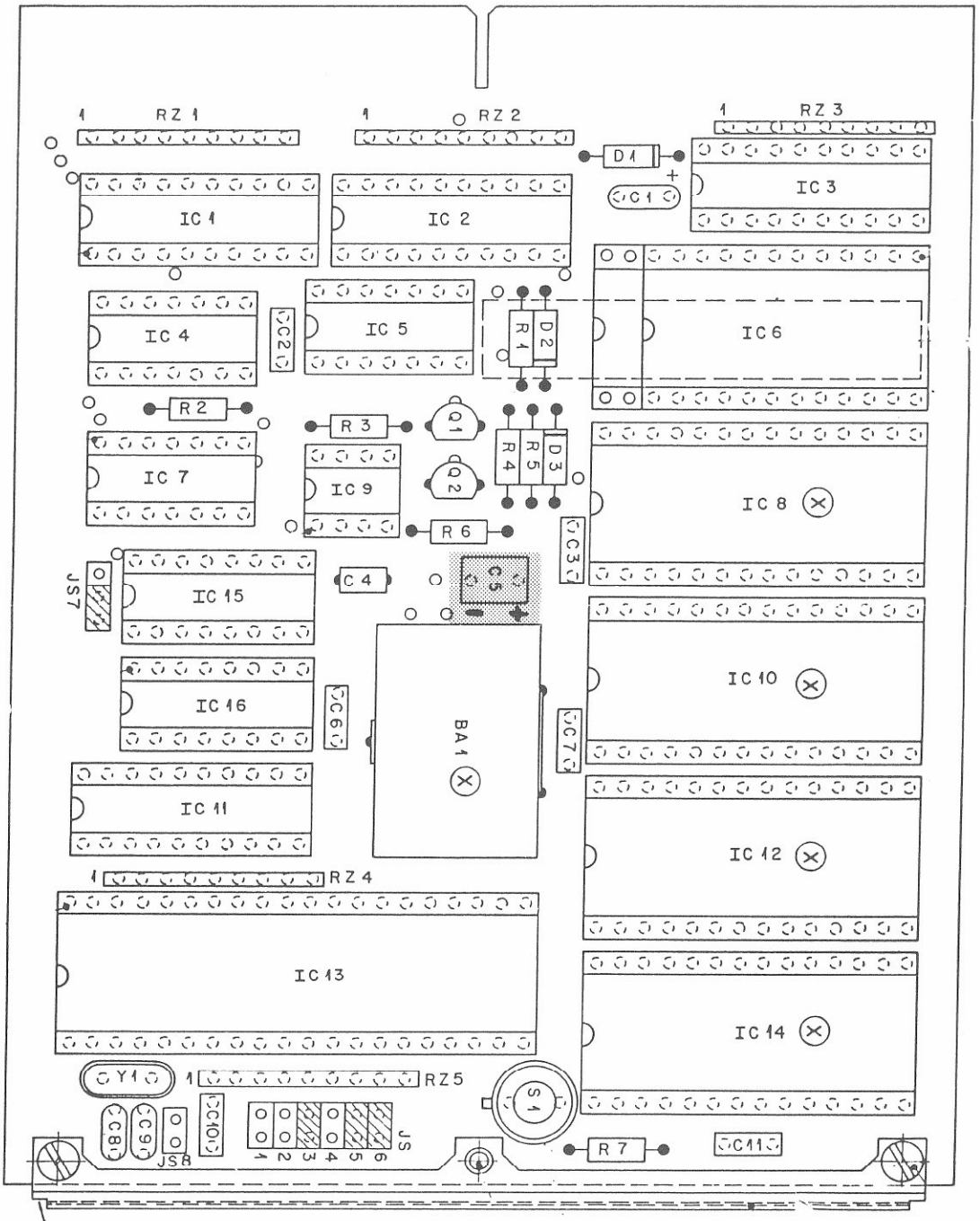

Layout 1.820.780.12
Bestückungsplan 1.820.780.12

STUDER REGENSDORF ZÜRICH	Benennung: MP UNIT WITH SOFTWARE	Nummer: 1.820.780.-82

Software A810 01/88

Bestellnummer 20.100.810.01
Order number 20.100.810.01

SI 116/88 D/E

Einleitung

- Die neue Software 01/88 ermöglicht Zeitcode Aufnahme- und Wiedergabe bei 3 3/4 ips (9,5 cm/s).

- Das Drop-in, drop-out timing wurde ebenfalls optimiert, um im Synchronisationsbetrieb (mit TLS 4000) ein nahtloses, unhörbares Aneinanderfügen der Aufnahmesequenzen zu garantieren.

- Es wurden gleichzeitig Aufkleber erstellt, welche die Funktion der Jumpers (Brückenstecker) erklärt.

- Die Software 01/88 sorgt auch für eine optimale Anpassung an die beiden neuen OPTIONEN parallele Kanalfernsteuerungs-Interface für VUK- (20.810.900.00) und NICHT VUK (20.810.901.00) Versionen.

- Einige kleine Mängel der vorgängigen Software 25/86 konnten behoben werden.

WICHTIG FUER TLS 4000 BENUETZER

Aus der Software-Kombinationstabelle auf der letzten Seite dieser SI sind die aktuellen Software-Kombinationen ersichtlich.

Der Software-Umrüstsatz 20.100.810.01 enthält

1 x Software 01/88	1.810.999.22
1 x Schild Index 22	1.810.780.01
1 x Schild für MPU	1.810.780.02
1 x Schild für Masterpanel	1.810.090.63
1 x Schild für progr. Tabelle	1.810.090.64
1 x SI 116/88	10.85.6010

Die Software 01/88 wurde bei allen A810 Tonbandgeräten ab Tonbandgeräten Serienr. 6885 serienmässig eingebaut.

Introduction

- The new software 01/88 makes time code recording and reproduction at 3 3/4 ips (9,5 cm/s) possible as well.

- The drop-in and drop-out timing has been optimized to ensure gapless inaudible insertions when working with a synchronizer system such as the TLS 4000.

- Labels to explain the jumper-functions are also provided.

- The software 01/88 offers optimal matching to the two new OPTIONS Parallel channel control interface for VUK- (20.810.901.00) and NON VUK 20.810.900.00) versions.

- Some minor shortcomings of the software 25/86 are also eliminated.

IMPORTANT FOR USERS OF THE TLS 4000

For the latest software combinations refer to the software combination table on the last page of this SI.

The software up-date kit 20.100.810.01 contains

1 x Software 01/88	1.810.999.22
1 x Label Index 22	1.810.780.01
1 x Label for MPU PCB	1.810.780.02
1 x Label for Masterpanel	1.810.090.63
1 x Label for progr. table	1.810.090.64
1 x SI 116/88	10.85.6010

The software 01/88 is factory installed in all A810 tape recorders from serial no. 6885 onwards.

Anwendung

Alle A810 Tonbandgeräte bestückt mit den unten aufgelisteten Printplatten oder Softwareanzeigen können ohne Hardware-Aenderungen auf den neuestens Softwarestand aufgerüstet werden.

Software	Printplatte
13/83	1.820.780.00 1.820.780.81 1.820.780.82
40/85	1.810.780.20
25/86	1.810.780.21

Application

The new software is suitable for all A810 tape recorders equipped with the below listed printed circuit boards or software status displays. A hardware modification is not required.

Software	PC-Boards
13/83	1.820.780.00 1.820.780.81 1.820.780.82
40/85	1.810.780.20
25/86	1.810.780.21

Bitte beachten

Geräte mit Software 07/83 (MPU Print 1.810.752.00) können nur durch Ersetzen der MPU-Karte auf die Software 01/88 aufgerüstet werden.

Bestellnummer für MPU-Karte mit Software 01/88: 1.810.780.22.

Please note

For tape recorders still equipped with software 07/83 (MPU PCB 1.810.752.00) the MPU-PCB needs to be exchanged.

Order number for MPU PCB with software 01/88: 1.810.780.22.

Umrüstarbeiten

Es müssen nur die drei EPROM's und der Bezeichnungsstreifen 1.810.780.22 auf der der MPU-Karte ersetzt werden. Siehe Bestückungsplan unten.

Modification instructions

Only the three EPROM's and the designation label 1.810.780.22 on the MPU PCB need to be replaced. See layout below.

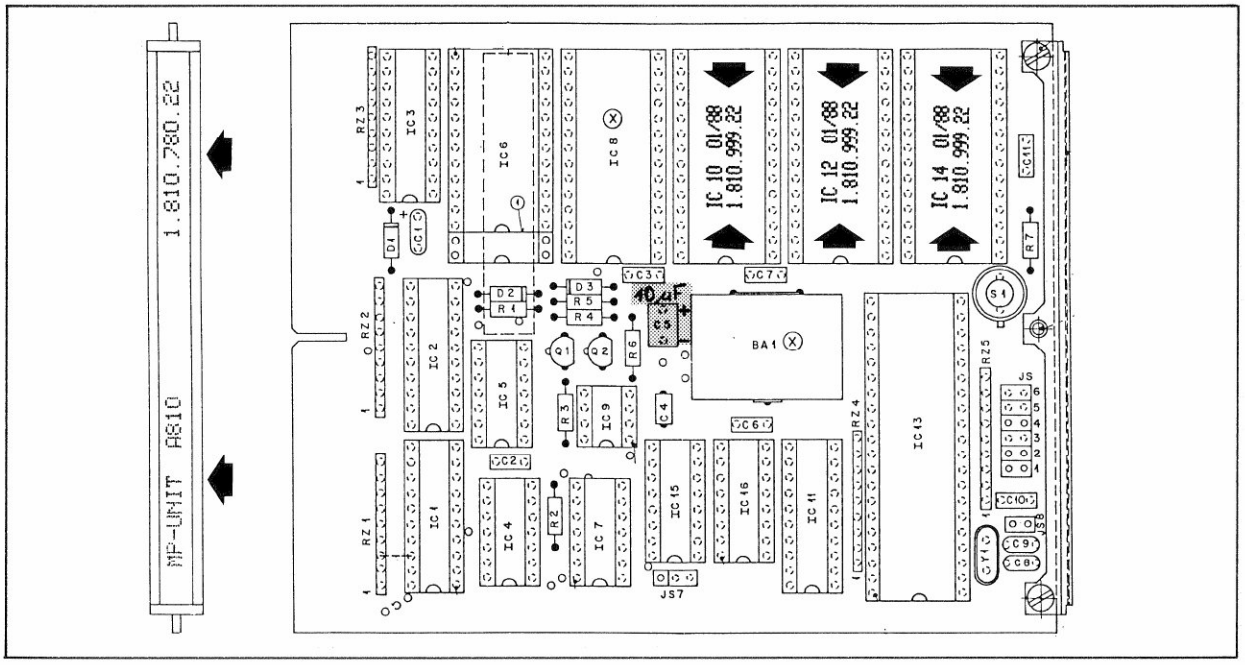

Auf diesem MPU Bestückungsplan muss C5 10 µF (59.26.2100) betragen.

Anschliessend die Serienummer der A810 auf dem Brückenstecker-Bezeichnungsschild 1.810.780.02 eintragen und Kleber an der Rückseite der MPU-Karte aufkleben.
Siehe Aufkleber Beispiel unten:

Check that C5 on this MPU-layout is 10 µF (59.26.2100).

Write the serial number of the A810 on to the jumper setting label 1.810.780.02 and stick it to the rear side of the MPU PCB.
See label example below:

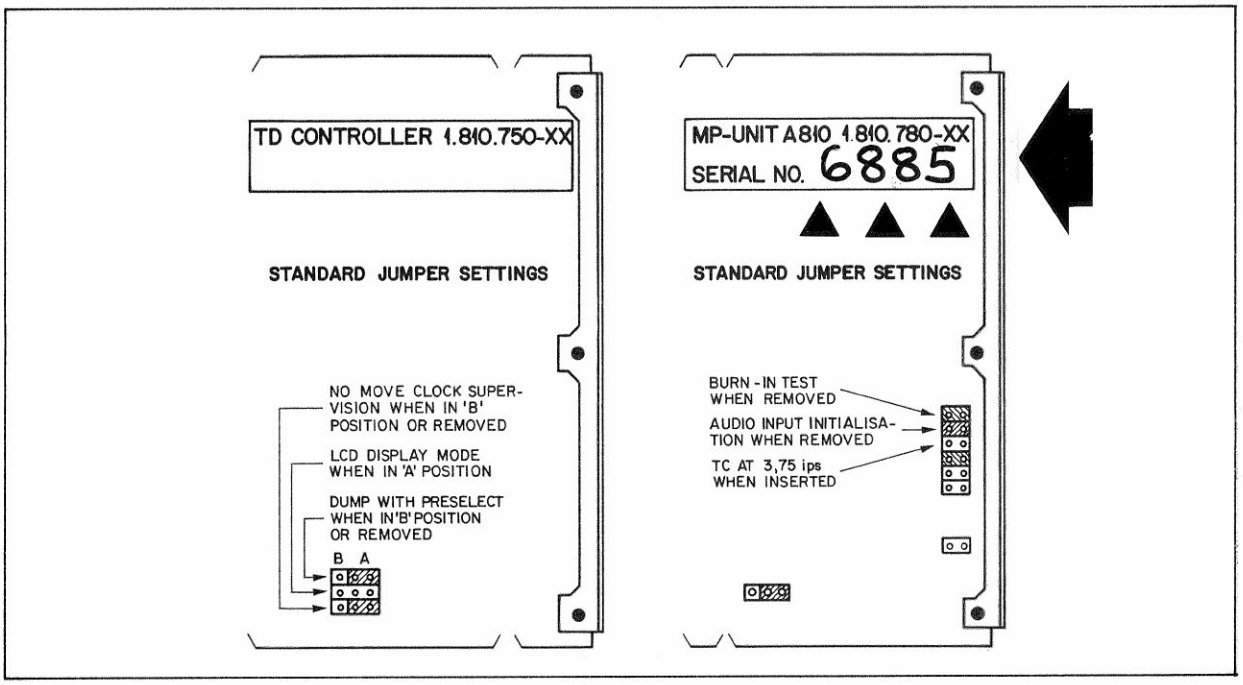

Wichtig

Beim Austausch der EPROM's können die Audio Daten verloren gehen. Daher nach Möglichkeit Daten auf Band abspeichern. Ebenso kann der RAM-interne Betriebsstundenzähler rückgegesetzt werden.

Sollten nach dem Software-Wechsel unerwartete Zustände auftreten, (wie z.B. Aussteigen aus der Aufnahme nach einigen Minuten Betrieb mit Anzeige EEEC1 oder EEEC2), so ist das RAM auf der MPU Karte zu löschen. Dazu RAM (IC 6) herausnehmen und die beiden Anschlussreihen mit einem Schraubenzieher kurzschliessen.
Dabei ist es unerlässlich, dass die Audioparameter vorher ausgelesen werden, ansonsten die Maschine neu eingemessen werden muss.

Important

Care must be taken to make sure the Audioparameters do not get lost when exchanging the EPROM's. Therefore, store the parameters on tape. The RAM-internal elapsed time counter may also become reset to zero.

If the tape recorder shows unexpected conditions after the software change (as i.e. drop out of record mode after a few minutes in operation and the display indicates EEEC1 or EEEC2) erase the RAM on the MPU PCB. For this remove the RAM (IC 6) and short circuit both rows of connection pins with a screwdriver.
Before doing this it is necessary that the audioparameters are saved on tape, otherwise the tape recorders will have to be realigned.

Bedienpanel aufklappen und Kleber ⑦ (1.810.090.63) für die Brückenstekkerpositionen auf dem Masterpanel auf der rechten Seite vom Bedienpanel aufkleben.

Open command unit panel and stick the label ⑦ (1.810.090.63) for the jumper settings of the masterpanel onto the right hand side of the command unit panel.

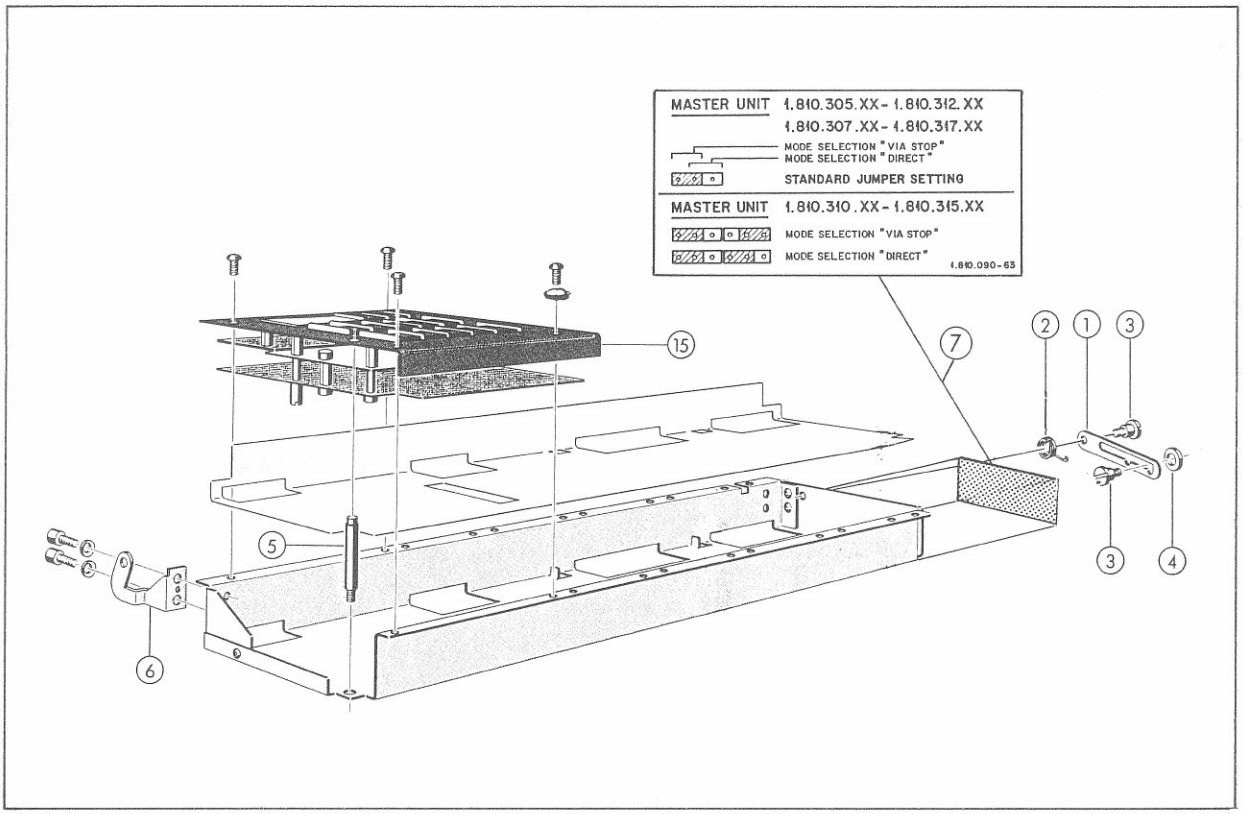

Zusatzkleber 1.810.090.64 für die DIL-Schalter auf dem PERIPHERY CONTROLLER auf die grosse Programmiertabelle aufkleben.

Attach the additional label 1.810.090.64 for the DIL-switch settings of the PERIPERY-CONTROLLER onto the large programming table.

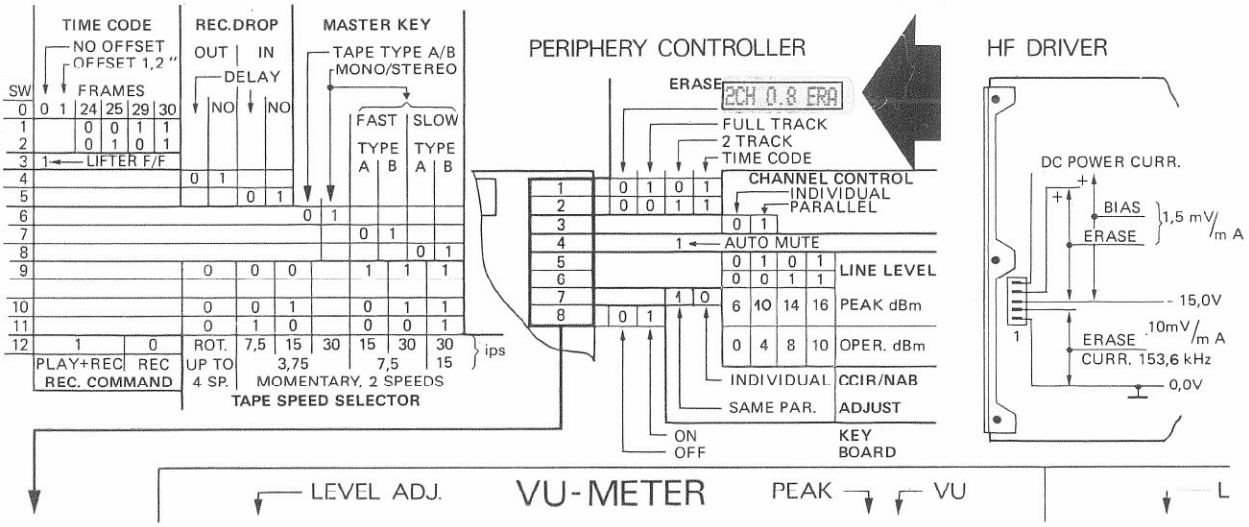

Software Aenderungen

1. Zeitcode Aufnahme-Wiedergabe bei 3 3/4 ips

Um die Zeitcode Aufnahme/Wiedergabe bei 3 3/4 ips zu aktivieren, muss der Brückenstecker JS 4 auf der MPU-Karte 1.810.780.22 eingesteckt werden.

Dabei ist zu beachten, dass das Potentiometer R2 auf dem Zeitcode-Print 1.820.721.XX für die Zeitcode-Aufnahmepegeleinstellung bei 7 1/2 ips dadurch auch für 3 3/4 ips eingesetzt wird.
Eine individuelle Pegeleinstellung für 3 3/4 ips und 7 1/2 ips ist daher nicht möglich.
Eventuell muss der Pegel für 3 3/4 ips TC-Aufzeichnung leicht optimiert werden. (Einstellung siehe Serviceanleitung Sektion 4/27).

2. Verbessertes Drop-in, Drop-out timing

Verbesserung der Verzögerungszeiten für den Aufnahme-Ein- und Ausstieg (Drop-in, Drop-out), um ein nahtloses, unhörbares Aneinanderfügen einzelner Aufnahmesequenzen zu gewährleisten.

3. Ergänzung der Löschkopf Varianten

Wird bei A810 NICHT ZEITCODE Geräten beim Löschvorgang keine Zeitcode-Löschung gewünscht, so muss der 2 Kanal Löschkopf mit 0,8 mm Spurtrennung 1.116.814.00 eingesetzt werden.

Für die entsprechende Löschstromvorgabe und das korrekte drop-in drop-out timing für diese Löschkopfvariante, musste die Software angepasst werden.
Beide DIL-Schalter 1 und 2 auf dem Periphery Controller müssen dafür auf Null stehen.

Software modifications

1. Time code recording and playback at 3 3/4 ips

To activate time code recording and playback at 3 3/4 ips, insert the jumper JS 4 on the MPU PCB 1.810.780.22.

Please note that the potentiometer R2 on the time code read/write unit 1.820.721.XX for aligning the time code record level at 7 1/2 ips is used to set the TC-level at 3 3/4 ips as well.
An individual level setting for 3 3/4 ips and 7 1/2 ips is not possible therefore.
Most probably the TC recording level for 3 3/4 ips needs to be optimized. (For readjustment refer to Service manual section 4/27).

2. Improved drop-in, drop-out timing

Improved drop-in, drop-out timing to ensure gapless, inaudible inserts.

3. Supplementary Info for erasehead versions

To avoid time code erasure on A810 NON-TIME CODE versions, a special 2 track erase head with 0,8 mm track spacing 1.116.814.00 is required.

For correct erase current and correct drop-in, drop-out timing the software has to be matched to this erasehead configuration.

Set the two DIL-switches 1 and 2 of the periphery controller to zero for this erasehead configuration.

Bitte beachten

Mit der Software 01/88 entfällt somit die Position NO RECORD. Für "Master safe" müssen daher entweder beide Aufnahmeverstärker oder beide HF-Treiber ausgesteckt werden.

4. Blinkende LED's in Rehearse

Bei der Schnittprobe-Funktion "Rehearse" (Befehl SRH der seriellen Schnittstelle) blinkt die PLAY LED (bzw. PLAY und REC).

5. Neue LOC-START Philosophie

Es werden nur noch definierte PLAY- (bzw. RECORD) Uebergänge im Loc-start-Speicher eingelesen, d.h. nur Wiedergabe und Aufnahmestarts aus Bandstillstand (Stop) werden abgespeichert.

6. FADER Bereitschaftsanzeige

Das Signal BR-FAD am Anschluss 8 des parallelen Fernsteueranschlusses zeigt mit der Software 01/88 die Faderstart Bereitschaft an, d.h. wenn ein Faderstart möglich ist, ist dieses Signal Low (OV) und kann somit mittels einer Lampe oder LED anzeigen, dass die A810 den Wiedergabe-Startbefehl beim Oeffnen des Faders annimmt.

7. Bedieneinheit ausschalten

Vom Print Parallel Remote Controller 1.810.738.00 aus kann wahlweise die Bedieneinheit oder die externe Fernsteuerung abgeschaltet werden.

Durch Anlegen von 0 V an die Kathode von D20 auf dem Parallel Remote Controller Print 1.810.738 wird die Befehlseingabe der externen Fernsteuerung verhindert.

Please note

With the software 01/88 the position NO RECORD is inapplicable.
For Master-safe remove either both record amplifier PCB or both HF-Driver PCB.

4. Flashing LED's in rehearse mode

In rehearse mode (command SRH of the serial remote control) the PLAY-LED (resp. PLAY and REC) flashes.

5. New LOC-START philosophy

Only "genuine" start positions will be stored in the Loc-start memory, i.e. only when the PLAY (resp. RECORD) start happens out of tape stand still (stop).

6. Indication of FADER READY

With software 01/88 the signal BR-FAD on pin 8 of the parallel remote control socket indicates the fader ready mode, i.e. when faderstart mode is possible the signal BR-FAD is low (OV). Thus a bulb or LED connected to this signal indicates that the A810 will accept the Play command when opening the fader.

7. Disabling the command unit

From the parallel remote controller PCB 1.810.738.00 it is possible to disable the internal command unit or the external remote control alternatively.

To disable the commands from the external remote control, apply OV to the cathode of D20 on the parallel remote controller PCB 1.810.738.

D24 an Widerstandsnetzwerk RZ1/ RZ2 anschliessen. Durch Anlegen von 0 V an die Kathode von D24 wird die Befehlseingabe der Geräteinternen Bedieneinheit verhindert.
Siehe Schema unten.

To disable the commands of the internal command unit, connect a diode D24 to the resistor network RZ1 / RZ2 and apply 0V to cathode of this diode.
See circuit diagram below.

Bitte beachten

Diese Signale sind nicht auf den parallelen Fernsteueranschluss gelegt.
Soll zum Beispiel die Abschaltung der Bedieneinheit Geräte extern erfolgen, so muss ein zusätzlicher Draht verwendet werden.

Please note

These signals are not available on the parallel remote control socket.
For example: To disable the command unit from an external device an additional wire will be required.

PARALLEL REMOTE CONTROLLER PCB 1.810.738–00 GR23 ADDRESS PCB 1.810.739–00

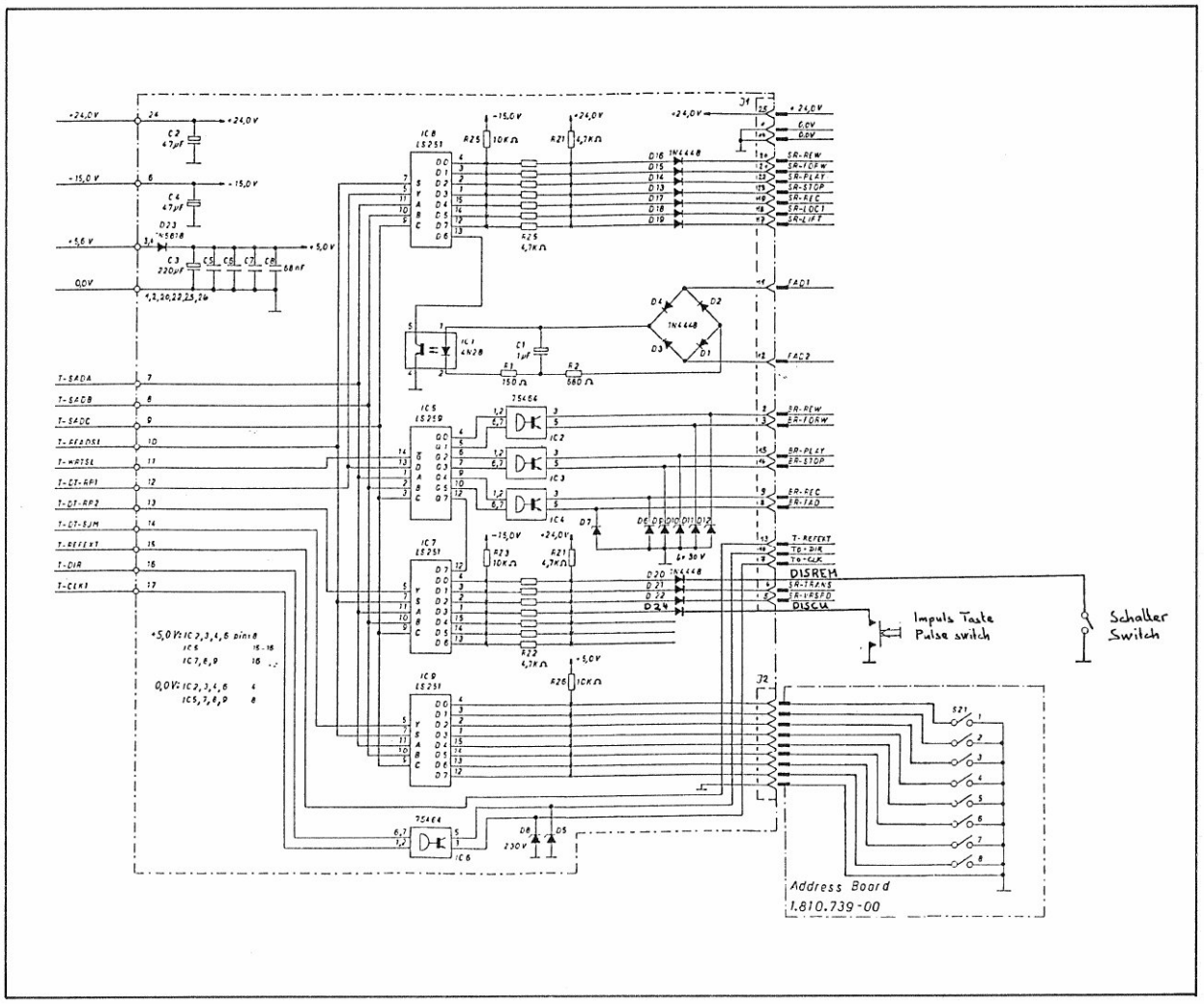

8. Anpassung an die Kanalfernsteuerung

Die Software musste den Optionen "Parallele Fernsteuerungs-Interface für VUK- (20.810.901.00) und NICHT VUK-Versionen (20.810.900.00)" insofern angepasst werden, damit bei eingeschalteter Kanalfernsteuerung (21.328.260.00) der angewählte Funktionsstatus beim Einschalten der A810 eingelesen wird.

8. Matching to the channel remote control

The software had to be matched to the options "parallel remote control interface for VUK- (20.810.901.00) and NON VUK-versions (20.810.900.00)" for correct initialization of the push-button selected functional status of the channel remote controller (21.328.260.00) when powering the A810 tape recorder while the channel remote controller is switched on.

9. Anpassung der Standard Entzerrungsparametern

Die Parameters für die Zeitkonstanten der Entzerrung und der Einstellung der Höhen wurde in der Software dem aktuellen Stand angeglichen.

CCIR

Wiedergabeentzerrung 3 3/4 ips:	AB
Aufnahmehöhen 3 3/4 ips:	90

NAB

Aufnahmehöhen 15 ips:	39
Sync Höhen 15 ips:	A0
Aufnahmehöhen 7 1/2 ips:	39
Sync Höhen 7 1/2 ips:	A0
Wiedergabeenentzerrung 7 1/2 ips:	6D
Aufnahmehöhen 3 3/4 ips:	90
Wiedergabeentzerrung 3 3/4 ips:	AB

9. Matching of the standard equalization parameters

With the new software, the parameters of the time constants for equalization and the treble adjustment are matched to the newest status.

CCIR

Reproduce equalization 3 3/4 ips:	AB
Record treble 3 3/4 ips:	90

NAB

Record treble 15 ips:	39
Sync treble 15 ips:	A0
Record treble 7 1/2 ips:	39
Sync treble 7 1/2 ips:	A0
Reproduce equalization 7 1/2 ips:	6D
Record treble 3 3/4 ips	90
Reproduce equalization 3 3/4 ips	AB

10. Neue Statusanzeige

Wird bei einem LOCATE-Befehl mit Aufnahmevorwahl über die RS 232 der Status-(ST?) während der Lockierphase abgefragt, so erscheint als Rückmeldung nicht mehr 12 (Locate + Play), sondern 13 = LOCATE + RECORD.
Ebenso erscheint bei der Dauer-Status-Abfrage (DST) die Rückmeldung LOC + REC.

10. New status information

The status information request (ST?) via RS 232 during the search mode of a LOCATE command with record preselected, changed from 12 (locate + play) to 13 = LOCATE + RECORD.
Furthermore the status information LOC + REC is displayed also with permanent status request DST.

11. Direkter Zugriff zu den DAC's ohne Abspeicherung.

Mit dem Befehl PAP über die RS 232 können für den aktuellen Betriebszustand Daten direkt in die digital / analog Converters (C-MOS Attenuators) eingeschrieben werden, ohne die im RAM abgespeicherten Daten zu verändern.

Befehlseingabe

PAP_i,j,xx

- xx = HEX Zahl
- j = D/A Converter
- i = Kanal (1 oder 2)
- _ = Abstand (Blank)

j: 0 = Pegel Repro / Sync
1 = Höhen Repro / Sync
2 = Bass Repro / Sync
3 = Entzerrung Repro / Sync
4 = Pegel Aufnahme
5 = Höhen Aufnahme
6 = Vormagnetisierung
7 = Entzerrung Aufnahme

Beispiel einer Befehlseingabe

PAP 1,0,00 Enter

- HEX-Wert 00
- Pegel Wiedergabe
- Kanal 1

Steht das Gerät auf REPRO, so wird dadurch der Wiedergabepegel von Kanal 1 auf 00 (Null) gesetzt. Kanal 1 ist somit stumm.

11. Direct access to the DAC's without store

The command PAP via RS 232 permits to enter Data direct into the digital / analog converters (C-MOS attenuators) without influencing the Data stored in the RAM, for the selected operational status.

Command input

PAP_i,j,xx

- xx = HEX Number
- j = D/A Converter
- i = Channel (1 or 2)
- _ = Blank

j: 0 = Level Repro / Sync
1 = Treble Repro / Sync
2 = Bass Repro / Sync
3 = Equalization Repro / Sync
4 = Level Record
5 = Treble Record
6 = Bias
7 = Equalization Record

Example for a command input

PAP 1,0,00 Enter

- HEX-value 00
- Level Repro
- Channel 1

Is the tape recorder switched to REPRO, the reproduce level of channel 1 will be set to 00 (zero), therefore, channel 1 is muted.

12. Software-Bereinigungen

- Fehler Rückmeldungen auf der LED-Anzeige werden jetzt immer mit EEE .... angezeigt, PPP Informationen sind somit nicht mehr möglich.

- Keine Aufhebung mehr von der Funktion "Auto mute" (Stummschaltung), wenn während dem Wickeln die Geschwindigkeit umgeschaltet wird.

12. Software corrections

- Fault indications on the LED-Display are now always shown with EEE ..., PPP-indications are no longer possible.

- No longer a disabling of the function "auto mute" by changing the speed during a fast wind mode.

13. Aufnahmeschlaufe

Mit dem Jumper JS6 auf der MPU-Karte (Burn-in mode) kann ein Aufnahmeschlaufbetrieb für Dauerlauf- und Testzwecke gesetzt werden.

Jumper JS6 eingesetzt: Normaler Betrieb der Maschine.

Jumper JS6 entfernt:
Maschine verhält sich wie folgt:

Beim Einschalten des Gerätes wird der Bandzähler auf 00:00:00 gesetzt und das Display zeigt EEEbb zur Information , dass der Aufnahmeschlaufenbetrieb aktiviert wurde und das Gerät geht bis zur Zieladresse in den Aufnahmebetrieb. Dann wird auf 00:00:00 zurückgespult und der Aufnahmevorgang wiederholt sich unendlich (Zieladressen siehe unten).

Soll anstelle der Daueranzeige EEEbb, der Zählerstand sichtbar werden, so muss die Taste TRANS und gleichzeitig die Taste STOP gedrückt werden.
Da dadurch das Laufwerk in Stop geht, muss anschliessend eine Laufwerkfunktionstaste (<, >, Play oder Rec) gedrückt werden, um den Schlaufenbetrieb wieder zu aktivieren.

Die Schlaufenlängen sind fest in der Software eingegeben und können extern nicht verändert werden.

13. Record Loop

The jumper JS6 on the MPU-PCB (Burn-in mode) enables a record-loop for endurance test-mode (soak testing).

For normal operation the jumper JS6 must be inserted.

If the jumper JS6 is removed the tape recorder reacts as follows:

When switching the tape recorder on, the tape counter resets to 00:00:00 and the display shows EEEbb to indicate that the record loop is activated. Afterwards the tape recorder starts in the record mode up to the target address, then the recorder rewinds to counter position 00:00:00. Now the recording mode will be repeated endlessly. (Target addresses see below).

To display the counter position instead of the permanent display EEEbb, press push button TRANS and STOP simultaneously. Because this causes the tape transport to enter the stop mode, an operating mode (i.e. <, >, Play or Rec) has to be selected to reactivate the loop mode.

The length of the loops have been defined in the software and therefore, cannot be changed by the user.

Die Schlaufenlängen betragen:

ca. 8 Minuten bei 9,5 cm/s
ca. 4 Minuten bei 19 cm/s
ca. 2 Minuten bei 38 cm/s
ca. 1 Minute bei 76 cm/s

Achtung wichtig:

Die Schlaufe erfolgt immer in Aufnahme d.h. der Löschvorgang ist immer aktiviert, selbst wenn die Safe-Ready-Schalter auf safe stehen, oder gar wenn das externe VU-Meter-Panel nicht angeschlossen ist.

14. A810 Software Anpassungstabelle an das TLS 4000

Siehe nächste Seite.

Achtung

Auf der Laufwerkfernsteuerung kann durch den Softwarewechsel die Funktion der LOC-Taste geändert haben. Zuordnung der gewünschten Funktion durch folgende Programmierung:

Auf der Laufwerkfernsteuerung kann die LOC 1 Taste als LOC-START-Taste oder zurück als LOC 1 Taste umprogrammiert werden.

Umprogrammieren der LOC 1 Taste auf LOC-START:

TRANS und LOC 1 Taste drücken und gleichzeitig noch die PLAY Taste drücken. Die LOC 1 Taste der Laufwerksteuerung ist somit LOC-START-Taste. Wird die Taste aktiviert, leuchtet auf der geräteinternen Bedieneinheit die LOC-START LED. (Funktion wird im RAM eingelesen somit bleibt sie auch nach dem Ausschalten des Gerätes enthalten).

Umprogrammieren von LOC-START zurück auf LOC 1:

TRANS und LOC-START-Tasten drücken und gleichzeitig STOP-Taste drücken. Somit ist die LOC-START Taste wieder LOC 1-Taste. Beim Aktivieren der LOC 1 Taste leuchtet auf der maschineninternen Bedieneinheit die LOC 1 LED.

The length of the loops are:

approx. 8 minutes for 3 3/4 ips
approx. 4 minutes for 7 1/2 ips
approx. 2 minutes for 15 ips
approx. 1 minute for 30 ips

Attention important:

The loop-mode is always in Record i.e. the erase mode is always activated, even if the ready-safe switches are in position safe or even if the external VU-meter panel is not connected.

14. A810 Software-matching table to the TLS 4000

See next page.

Please note

In case the LOC-key on the tape transport remote control has changed its function due the software change reprogram the required function according to the following instructions:

On the tape transport remote control the LOC 1 push button function can be changed into LOC-START and vica versa.

Programming of the LOC 1 push button to LOC-START:

Press TRANS and LOC 1 push buttons together and at the same time the PLAY-key. Now the LOC 1 push button activates the LOC-START function. When pressing this push button, the LOC-START LED of the internal command unit lights up. (The function is stored in the RAM, therefore, the function remains stored even after power off).

Programming the LOC-START function back to LOC 1:

Press TRANS and LOC-START push buttons together and in addition the STOP-push button. Now the LOC-START push button is again LOC 1. When pressing this push button the LOC 1 LED of the internal command unit lights up.

A810 SOFTWARE — MATCHED / ANPASSUNG AN — TLS 4000

The different Software conditions of the A810 requires also different Software (SW) for the TLS 4000 Interfaces.
Mit den verschiedenen Software-Ständen der A810 werden auch verschiedene TLS 4000 Interfaces Software (SW) notwendig.

A810 SOFTWARE	TLS 4000 MK I 1.812.101.XX			TLS 4000 MK II 1.812.301.XX	
	Interface 1.812.120.XX	Interface 1.812.130.XX	Synchronizer PCB 1.812.106.XX	Interface 1.812.400.XX	Synchronizer PCB 1.812.320.XX
MPU 1.820.780.00 1.820.780.81 1.820.780.82 (13/83)	1.812.120.82 SW 1.100.549.82 PROM R 5491-2		1.812.106.84 SW 1.100.548.84		
MPU 1.810.780.20 (40/85)	1.812.120.83 SW 1.100.549.83 PROM R 5491-3	1.812.130 SW 1.812.959.20	1.812.106.23 SW 1.812.910.23		
MPU 1.810.780.21 (25/86)	1.812.120.84 SW 1.100.549.84 PROM R 5491-4	1.812.130.21/22/23 SW 1.812.959.21/22/23	1.812.106.23 SW 1.812.910.23		
ab Serienummer 6885 MPU 1.810.780.22 (01/88)	1.812.120.84 SW 1.100.549.84 PROM R 5491-4	1.812.130.23 SW 1.812.959.23	1.812.106.23 SW 1.812.910.23	1.812.400.20 SW 1.812.950.20	1.812.320.21 SW 1.812.900.21 1.812.901.21 1.812.902.21

LEGENDE

→ Mögliche Kombination

Aktuelle Kombination

LEGEND

→ Allowed combination

Latest combination

Other ManualsLib Projects

www.manualslib.com

www.manualslib.de

www.manualslib.es

www.manualslib.fr

www.manualslib.nl

www.manualslib.mx

www.manualslib.tech 30+ Languages